AD-A041 115 SOUTHEASTERN MICHIGAN WASTEWATER MANAGEMENT SURVEY 1/6
SCOPE STUDY DESIGN AND COST APPENDIX(U) CORPS OF
ENGINEERS DETROIT MICH DDTROIT DISTRICT MAY 74
UNCLASSIFIED F/G 13/2 NL

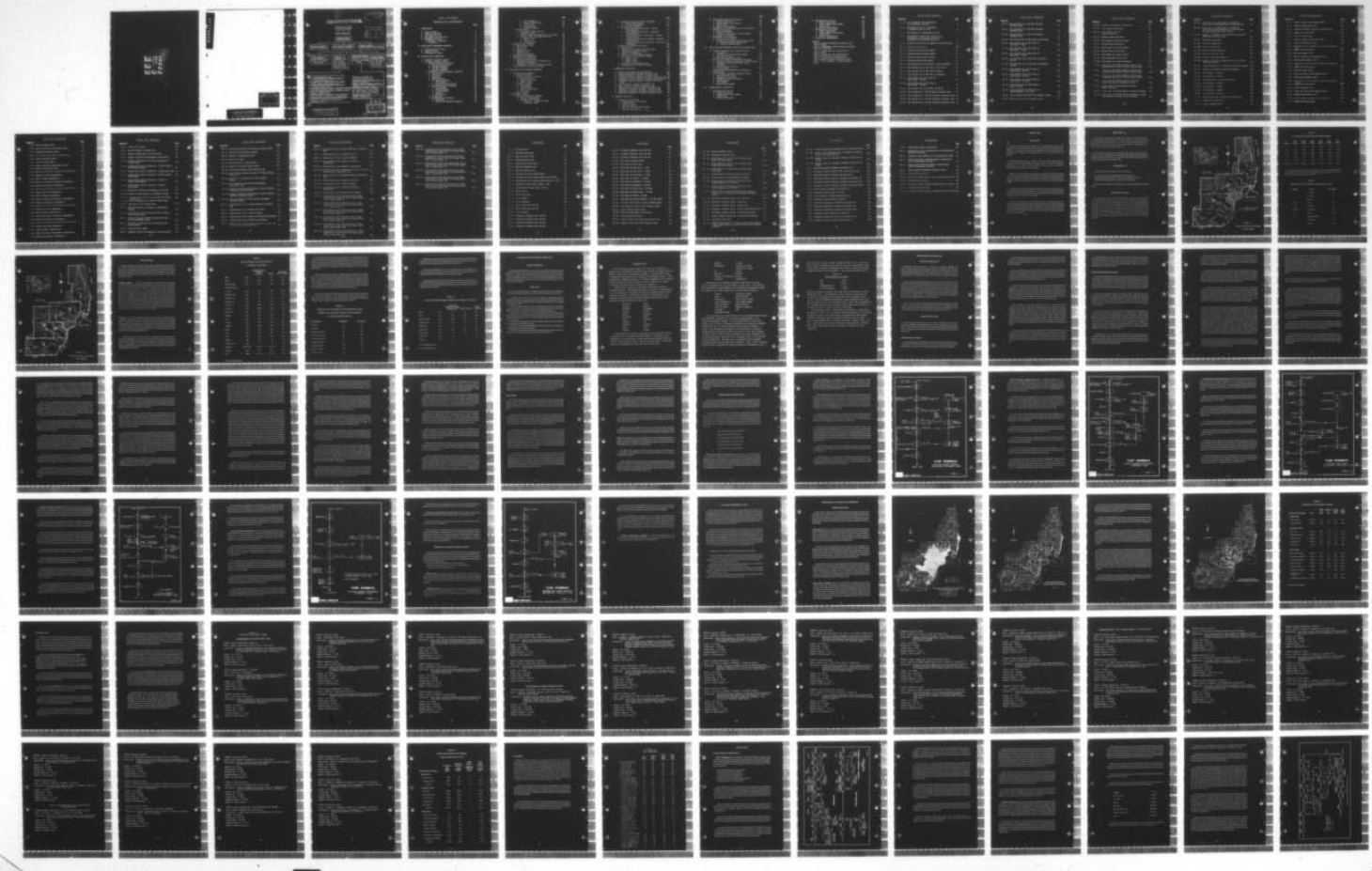

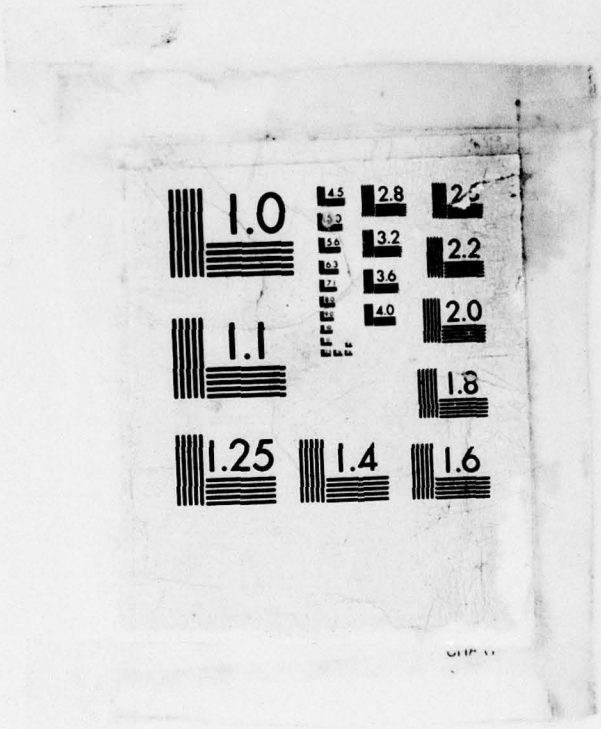
1.0
1.1
1.25
1.4
1.6
1.8
2.0
2.2
2.8
3.2
3.6
4.0

ADA041115

DDC
RECEIVED
JUL 1 1977
A

DISTRIBUTION STATEMENT A
Approved for public release;
Distribution Unlimited

(1)

ORIGINAL CONTAINS COLOR PLATES: ALL DDC REPRODUCTIONS WILL BE IN BLACK AND WHITE

ACCESSION for
NTIS White Section
DDC Buff Section
UNANNOUNCED
JUSTIFICATION
BY
DISTRIBUTION/AVAILABILITY CODES
Dist. AVAIL. and/or SPECIAL
A

SOUTHEASTERN MICHIGAN WASTEWATER MANAGEMENT SURVEY SCOPE STUDY

REPORT COMPOSITION

SUMMARY REPORT
OVERVIEW OF STUDY

- **BACKGROUND APPENDIX** — BASE DATA INFORMATION
- **PLAN FORMULATION APPENDIX** — THE PROCESS OF PLANNING
- **COMMENTS APPENDIX** — PUBLIC REVIEW OF DRAFT REPORTS

Under PLAN FORMULATION APPENDIX:

- **INSTITUTIONAL ARRANGEMENTS APPENDIX** — EXISTING AND PROPOSED WASTEWATER MANAGEMENT ORGANIZATIONS
- **DESIGN AND COST APPENDIX** — TECHNICAL DESIGN AND ESTIMATED COSTS OF WASTEWATER MANAGEMENT COLLECTION AND TREATMENT SYSTEMS
- **EVALUATION APPENDIX** — IMPLICATIONS AND USE POTENTIAL OF PROPOSED WASTEWATER MANAGEMENT SYSTEMS
- **PUBLIC PARTICIPATION APPENDIX** — PROGRAM FOR PUBLIC INVOLVEMENT AND PARTICIPATION IN PLANNING PROCESS

Under DESIGN AND COST APPENDIX:

- LAND IRRIGATION AND COLLECTION FACILITIES (DOW ENGINEERING INC.)
- LAGOON TREATMENT AND CONVEYANCE SYSTEMS (BAUER ENGINEERING, INC.)
- ALTERNATIVES FOR STORMWATER RUNOFF CONTROL (AYRES, LEWIS, NORRIS AND MAY, INC.)
- ADVANCED WASTEWATER TREATMENT FACILITIES (STANLEY CONSULTANTS)
- INDEPENDENT PHYSICAL-CHEMICAL TREATMENT FACILITIES (IN CONSULTATION WITH WALTER J. WEBER Jr. Ph.D.)
- GEOLOGIC CONSIDERATIONS (ANDREW J. MOZOLA, Ph.D.)
- LAND TREATMENT OF WASTEWATER IN SOUTHEASTERN MICHIGAN (DEPT. OF CROP & SOIL SCIENCES, MSU)
- WASTEWATER IRRIGATION USING PRIVATELY OWNED FARMLAND IN SOUTHEASTERN MICHIGAN (DOW ENGINEERING, INC.)

Under EVALUATION APPENDIX:

- ECOLOGICAL ASSESSMENT FOR WASTEWATER MANAGEMENT SEM (INSTITUTE OF WATER RESEARCH, MSU)
- HYGIENIC ASSESSMENTS (SCHOOL OF PUBLIC HEALTH, U OF M)
- ECONOMIC (AREA) ASSESSMENT AND SOCIAL ASSESSMENT (MR. PAUL M. REID)
- AGRICULTURAL ECONOMIC ASSESSMENT AND AN ANALYSIS OF ZONES PROPOSED FOR LAND TREATMENT OF WASTEWATER (MR. LEE A. CHRISTENSEN, ECONOMIC RESEARCH SERVICE, USDA.)
- AESTHETIC ASSESSMENT (DETROIT DISTRICT STAFF)

DISTRIBUTION STATEMENT A
Approved for public release;
Distribution Unlimited

DDC
RECEIVED
JUL 1 1977
A

DESIGN & COST APPENDIX

TABLE OF CONTENTS

	Page
I. INTRODUCTION	
A. Scope of Report	1
B. Regional Study Area	2
C. The Planning Period	2
D. Wastewater Flow Projection	2
E. Wastewater Profiles	6
1. Municipal - Industrial	6
2. Stormwater	6
II. WATER QUALITY MANAGEMENT OBJECTIVES	10
A. Program Technical Goals	10
B. Design Criteria	10
C. Performance Criteria	11
III. TECHNOLOGICAL ALTERNATIVES	12
A. Wastewater Treatment Options	12
B. Proposed Treatment Systems	12
1. Advanced Wastewater Treatment	12
a. Preliminary Treatment	13
b. Primary Treatment	13
c. Secondary Treatment	13
d. Tertiary Treatment	13
2. Independent Physical Chemical Treatment	14
a. Clarification	14
b. Filtration	15
c. Absorption	15
d. Ammonia Removal	16
1. Ammonia Stripping	16
2. Ion Exchange	16
3. Break-Point Chlorination	16
e. Ultra-Purification Processes	16
1. Ion Exchange	17
2. Reverse Osmosis	17
3. Electrodialysis	17
4. Freezing	17
5. Distillation	18
f. Disinfection	18
g. Sludge Handling Processes	18
1. Thickening	20
2. Aerobic and Anaerobic Digestion	20

	Page
3. Heat Treatment	20
4. Chemical Conditioning	20
5. Incineration	20
6. Transportation	21
7. Ultimate Disposal	21
3. Land Treatment	
a. Pretreatment Facilities and Treatment Lagoons	22
b. Storage Lagoons and Chlorination Facilities	22
c. Irrigation and Collection Facilities	23
1. Center Pivot	23
2. Fixed Set	23
3. Grading Border	23
C. Existing Water Treatment	24
1. Detroit Metro Plant	24
2. Monroe Plant	27
3. Port Huron	29
4. Wyandotte Plant	31
5. Algonac Plant	33
6. East China Township	35
D. Methodology for Developing Technological Alternatives	35
1. Initial Investigations	35
2. Detailed Investigation and Selection of Alternative Components	37
3. Development of Final Alternative Systems	37
E. Cost Estimation Methodology Criteria	38
IV. DEVELOPMENT OF ALTERNATIVE COMPONENTS	39
A. Collection and Conveyance	39
1. Existing Systems	39
2. Future Collection Facilities	39
a. Detroit System	42
b. Huron River System	42
c. Adrian System	42
3. Conveyance Systems	45
a. Deep Tunnels	45
b. Open Channels	46
c. Gravity Interceptors	46
d. Force Mains	46
4. Cost Estimates	53
B. Treatment Systems	55
1. Advanced Wastewater Treatment	55
a. Initial Investigations	55
b. Detailed Investigation	58
1. Municipal - Industrial Plants	59
2. Stormwater Plants	77

		Page
2.	Independent Physical Chemical Treatment	92
	a. Initial Investigations	92
	b. Detailed Investigation	95
3.	Land Treatment Systems	121
	a. Lagoon Treatment Facilities - Initial Investigations	121
	b. Lagoon Treatment Facilities - Detailed Investigations	125
	c. Irrigation and Collection Systems - Initial Investigations	137
	d. Irrigation and Collection Systems - Detailed Investigations	151
	e. Irrigation and Collection Systems - Alternative Development	168
C.	Stormwater Collection and Storage	169
1.	Introduction	169
2.	Separation of Stormwater and Municipal - Industrial Wastewater Systems	169
3.	Initial Investigations	171
4.	Selection of Final Design Criteria	174
5.	Presentation of Alternative Schemes	181
	a. Scheme 1 and 2	183
	b. Scheme 3 and 4	189
	c. Scheme 5 and 6	194
6.	Selection of a Stormwater Plan	198
7.	Recommendations for Further Studies	199
V.	ALTERNATIVES CONSIDERED	201
A.	Similarities Between the Alternatives	202
B.	Advanced Wastewater Treatment Alternative One	206
C.	Advanced Wastewater Treatment Alternative Two	214
D.	Independent Physical-Chemical Treatment Alternative One	221
E.	Independent Physical-Chemical Treatment Alternative Two	228
F.	Independent Physical-Chemical Treatment Alternative Three	235
G.	Land Irrigation Treatment Alternative One	242
H.	Land Irrigation Treatment Alternative Two	251
I.	Combination Wastewater Treatment Alternative One	259
J.	Combination Wastewater Treatment Alternative Two	266
K.	Combination Wastewater Treatment Alternative Three	273
L.	Combination Wastewater Treatment Alternative Four	281
VI.	TECHNICAL EVALUATION	290
A.	Summary of Alternatives	290
1.	Sludge Handling and Disposal	290
2.	Economic Costs	291
3.	Land Requirements	291
4.	Chemical and Energy Requirements	293
5.	Manpower Requirements	296

		Page
B.	Interim Water Quality Alternative	297
1.	General Description	297
2.	Sludge Handling and Disposal	300
3.	System Costs	301
4.	Resource Requirements	302
C.	Comparison of Interim Water Quality Alternative To Corps Alternatives	305
1.	Effluent Standards	305
2.	Variation in Stormwater Control Concepts	306
3.	Economic Comparisons	307
D.	Additional Cost Information	311
1.	Various Interest Rates	311
2.	Economics of Acquiring Existing Facilities	311
a.	Outstanding Bonded Indebtedness	311
b.	Community Reimbursement	314
VII.	LAND IRRIGATION TREATMENT OPTIONS USING PRIVATE LAND	315
A.	Concept Development and Irrigation Design	315
1.	Introduction	315
2.	Irrigation and Drainage Zone Concept	316
3.	Land Use and Crops	319
4.	Wastewater Application Rates	320
B.	Design of Irrigation and Drainage Facilities	323
1.	Conceptual Design of Wastewater Treatment Zones	323
2.	Wastewater Distribution Within a Zone	331
3.	Irrigation	331
4.	Collection and Discharge	333
5.	Cost Estimation	334
C.	Alternatives Using Wastewater Irrigation on Private Farms	340
D.	Land Irrigation Treatment Alternative Three	340
1.	Land Irrigation System	341
2.	Transmission Facilities	344
3.	Treatment and Storage Lagoons	349
4.	Sludge Disposal	351
5.	Cost Summary	352
6.	Resource Requirements	353
VIII.	REPRESENTATIVE ALTERNATIVES	357
A.	Representative Plan One	357
1.	General Description	357
2.	Sludge Handling and Disposal	361
3.	System Costs	361
4.	Resource Requirements	363

	Page
B. Representative Plan Two	365
1. General Description	365
2. Sludge Handling and Disposal	367
3. System Costs	371
4. Resource Requirements	373
C. Representative Plan Three	376
1. General Description	376
2. Sludge Handling and Disposal	381
3. System Costs	383
4. Resource Requirements	383
D. Phasing and Implementation	387

Addendum

Part A - Advanced Wastewater Treatment Plant Cost Estimates

Part B - Indpendent Physical-Chemical Treatment Plant Cost Estimates

Part C - Design and Cost Information for Lagoon Systems

Part D - Design and Cost Information for Major Land Irrigation Treatment Areas

Part E - Design and Cost Information for Land Irrigation Treatment Alternative Three

Part F - Cost Estimates for Sludge Landfill Sites

LIST OF TABLES

Table No.		Page
I.- 1.	M & I Wastewater Flow Projections for Southeastern Michigan	4
I.- 2.	Projected Flow of M & I Wastewater to Treatment Plans in 1990	4
I.- 3.	Dry Weather M & I Wastewater Profiles	7
I.- 4.	Representative Constituent Concentrations from Combined and Separate Storm Sewer Discharges in Southeastern Michigan	8
I.- 5.	Effluent Profiles from Stormwater Storage Facilities	9
II.- 1.	Effluent Quality Goals	11b
IV.- 1.	Collection System Design Summary	44
IV.- 2.	Conveyance System Design Summary	47
IV.- 3.	Collection System Design Summary	52
IV.- 4.	Conveyance System Cost Summary	54
IV.- 5.	Cost Estimate for an AWT Plant at Adrian-Tecumseh	62
IV.- 6.	Cost Estimate for an AWT Plant at Port Huron	64
IV.- 7.	Cost Estimate for an AWT Plant at Monroe	67
IV.- 8.	Cost Estimate for an AWT Plant at Wyandotte	69
IV.- 9.	Cost Estimate for an AWT Plant at Huron River - 400 MGD	72
IV.-10.	Cost Estimate for an AWT Plant at Huron River - 525 MGD	74
IV.-11.	Cost Estimate for an AWT Plant at Detroit	76
IV.-12.	Cost Estimate for a MGD Stormwater Treatment Plant	79
IV.-13.	Cost Estimate for a 225 MGD Stormwater Treatment Plant	81
IV.-14.	Cost Estimate for a 400 MGD Stormwater Treatment Plant	83
IV.-15.	Cost Estimate for a 600 MGD Stormwater Treatment Plant	85

LIST OF TABLES

Table No.		Page
IV.-16.	Cost Estimate for a 1000 MGD Stormwater Treatment Plant	87
IV.-17.	Cost Estimate for a 1200 MGD Stormwater Treatment Plant	89
IV.-18.	Cost Estimate for a 1400 MGD Stormwater Treatment Plant	91
IV.-19.	Cost Estimate for an IPCT Plant at Port Huron	98
IV.-20.	Cost Estimate for an IPCT Plant at East China - 8 MGD	100
IV.-21.	Cost Estimate for an IPCT Plant at East China - 12 MGD	102
IV.-22.	Cost Estimate for an IPCT Plant at East China - 36 MGD	104
IV.-23.	Cost Estimate for an IPCT Plant at Detroit - 806 MGD	106
IV.-24.	Cost Estimate for an IPCT Plant at Wyandotte - 125 MGD	109
IV.-25.	Cost Estimate for an IPCT Plant at Huron River - 400 MGD	111
IV.-26.	Cost Estimate for an IPCT Plant at Huron River - 525 MGD	113
IV.-27.	Cost Estimate for an IPCT Plant at Huron River - 1371 MGD	115
IV.-28.	Cost Estimate for an IPCT Plant at Monroe - 40 MGD	117
IV.-29.	Cost Estimate for an IPCT Plant at Adrian-Tecumseh - 222.5 MGD	120
IV.-30.	Initial Design Flow Rates for Treatment Lagoons	122
IV.-31.	Design Flow Rates for Treatment Lagoons	125

LIST OF TABLES

Table No.		Page
IV.-32.	Profiles of Wastewater Constituants	125
IV.-33.	Grit Chamber Design Data	126
IV.-34.	Cost Summary for Grit Removal Facilities	127
IV.-35.	Aerated Lagoon Design Data	128
IV.-36.	Cost Summary for Aerated Lagoons	129
IV.-37.	Storage Lagoon Design Data	130
IV.-38.	Cost Summary for Storage Lagoons	132
IV.-39.	Seepage Control Design Data	133
IV.-40.	Cost Summary for Seepage Control	134
IV.-41.	Sludge Management Design Data	136
IV.-42.	Cost Summary for Sludge Management	136
IV.-43.	Total Costs for Design Module of Center Pivot Irrigation Rigs Giving 76 Percent Land Coverage	145a
IV.-44.	Total Costs for Design Module of Center Pivot Irrigation Rigs Giving 91 Percent Land Coverage	145b
IV.-45.	Total Costs for Design Module of Center Pivot Irrigation Rigs Giving 95 Percent Land Coverage	145c
IV.-46.	Total Costs for Design Module of Fixed Set Spray Irrigation with Underground Pipes	146a
IV.-47.	Total Costs for Design Module of Graded Border Irrigation	146b
IV.-48.	Total Costs for Design Module of Furrow Irrigation	146c
IV.-49a.	Total Costs for Design Module of Underdrain System with Laterals Spaced on 33.0 Foot Centers	148

LIST OF TABLES

Table No.		Page
IV.-49b.	Total Costs for Design Module of Underdrain System with Laterals Spaced on 55.0 Foot Centers	149
IV.-49c.	Total Costs for Design Module of Underdrain System with Laterals Spaced on 16.5 Foot Centers and with Underground Asphalt Barrier	150
IV.-50.	Summary of Predominant Soils Occurring in Proposed Wastewater Irrigation Sites	152
IV.-51.	Wastewater Application	161
IV.-52a.	Costs for Lenawee Site	162
IV.-52b.	Costs for Monroe Site	163
IV.-52c.	Costs for Huron-Tuscola Site	164
IV.-52d.	Costs for St. Clair Site	165
IV.-52e.	Costs for Fulton-Williams Site	166
IV.-52f.	Summary of Capital and Ammortized Costs at 7% and 10% Interest Rates	167
IV.-53.	Computer Tabulation of Stormwater Simulation Program	178
IV.-54.	Summary of Stormwater Storage Requirements	186
IV.-55.	Cost Estimate - Scheme 1	187
IV.-56.	Cost Estimate - Scheme 2	188
IV.-57.	Treatment Rates for Various Sub Areas	190
IV.-58.	Cost Estimate - Scheme 3	192
IV.-59.	Cost Estimate - Scheme 4	193
IV.-60.	Cost Estimate - Scheme 5	195
IV.-61.	Cost Estimate - Scheme 6	197
V.- 1.	Advanced Wastewater Treatment Alternative One	209
V.- 2.	Summary Cost Sheet AWT-1	210
V.- 3.	Land Use Summary AWT-1	211

L I S T O F T A B L E S

Table No.		Page
V.- 4.	Energy & Chemical Requirements AWT-1	212
V.- 5.	Manpower Requirements AWT-1	213
V.- 6.	Advanced Wastewater Treatment Alternative Two	216
V.- 7.	Summary Cost Sheet AWT-2	217
V.- 8.	Land Use Summary AWT-2	218
V.- 9.	Energy & Chemical Requirements AWT-2	219
V.-10.	Manpower Requirements AWT-2	220
V.-11.	Independent Physical-Chemical Treatment Alternative One	221
V.-12.	Summary Cost Sheet IPCT-1	224
V.-13.	Land Use Summary IPCT-1	225
V.-14.	Energy and Chemical Requirements IPCT-1	226
V.-15.	Manpower Requirements IPCT-1	227
V.-16.	Independent Physical-Chemical Treatment Alternative Two	228
V.-17.	Summary Cost Sheet IPCT-2	231
V.-18.	Land Use Summary IPCT-2	232
V.-19.	Energy and Chemical Requirements IPCT-2	233
V.-20.	Manpower Requirements IPCT-2	234
V.-21.	Independent Physical-Chemical Treatment Alternative Three	235
V.-22.	Summary Cost Sheet IPCT-3	238
V.-23.	Land Use Summary IPCT-3	239
V.-24.	Energy and Chemical Requirements IPCT-3	240
V.-25.	Manpower Requirements IPCT-3	241
V.-26.	Land Irrigation Treatment Alternative One	245
V.-27.	Summary Cost Sheet LAND-1	246

LIST OF TABLES

Table No.		Page
V.-28.	Land Use Summary LAND-1	247
V.-29.	Energy and Chemical Requirements LAND-1	249
V.-30.	Manpower Requirements LAND-1	250
V.-31.	Land Irrigation Treatment Alternative Two	251
V.-32.	Summary Cost Sheet LAND-2	255
V.-33.	Land Use Summary LAND-2	256
V.-34.	Energy and Chemical Requirements LAND-2	257
V.-35.	Manpower Requirements LAND-2	258
V.-36.	Combination Wastewater Treatment Alternative One	259
V.-37.	Summary Cost Sheet COMBINATION-1	262
V.-38.	Land Use Summary COMBINATION-1	263
V.-39.	Energy and Chemical Requirements COMBINATION-1	264
V.-40.	Manpower Requirements COMBINATION-1	265
V.-41.	Combination Wastewater Treatment Alternative Two	266
V.-42.	Summary Cost Sheet COMBINATION-2	269
V.-43.	Land Use Summary COMBINATION-2	270
V.-44.	Energy and Chemical Requirements COMBINATION-2	271
V.-45.	Manpower Requirements COMBINATION-2	272
V.-46.	Combination Wastewater Treatment Alternative Two	276
V.-47.	Summary Cost Sheet COMBINATION-3	277
V.-48.	Land Use Summary COMBINATION-3	278
V.-49.	Energy and Chemical Requirements COMBINATION-3	279
V.-50.	Manpower Requirements COMBINATION-3	280
V.-51.	Combination Wastewater Treatment Alternative Four	284
V.-52.	Summary Cost Sheet COMBINATION-4	285
V.-53.	Land Use Summary COMBINATION-4	287
V.-54.	Energy and Chemical Requirements COMBINATION-4	288
V.-55.	Manpower Requirements COMBINATION-4	289

LIST OF TABLES

Table No.		Page
VI.-1.	System Costs Summary	292
VI.-2.	Land Use Summary of Alternatives	294
VI.-3.	Resource Demand Summary of Alternatives	294
VI.-4.	Summary of Manpower Requirements of Alternatives	294
VI.-5.	Effluent Requirements for Plants Discharging to Inland Streams	299
VI.-6.	Interim Water Quality Alternative - Sludge Handling and Disposal Methods	301
VI.-7.	Interim Water Quality Alternative - Summary Cost Sheet	302
VI.-8.	Interim Water Quality Alternative - Estimated Land Requirements	303
VI.-9.	Interim Water Quality Alternative - Energy and Chemical Requirements	304
VI.-10.	Interim Water Quality Alternative - Manpower Requirements	304
VI.-11.	Comparison of Effluent Requirements for Streams	305
VI.-12.	Ultimate Storage Capacity of Stormwater Systems	306
VI.-13.	Comparison Cost Sheet for Second Stage and Interim Alternatives	308
VI.-14.	Costs of Alternatives at Various Interest Rates	
VII.-1.	Description of Soil Associations	317
VII.-2.	Land Use Patterns for Counties in Southeastern Michigan	322
VII.-3.	Projected 1985 Crop Distribution with Irrigation and Irrigation Rates	325
VII.-4.	Selected Irrigation Method and Application Rate for Soil Management Groups	332
VII.-5.	Selected Soil Permeability for Estimating Tile Drain Spacings	333
VII.-6.	Irrigation Cost Summary	337
VII.-7.	Summary of Design Data Related to Soil Association	339

LIST OF TABLES

Table No.		Page
VII.-8.	Design and Cost Data for Selected Irrigation Areas	342
VII.-9.	Description of Conveyance Systems	345
VII.-10.	Summary of Transmission Costs	348
VII.-11.	Design Flow Rates	349
VII.-12.	Modular Design of Lagoon Systems	350
VII.-13.	Summary of Costs for Lagoon Systems	350
VII.-14.	Cost Summary-Lenawee County Lagoon System	351
VII.-15.	Design Summary and Cost Estimate for Sludge Landfill Facilities	352
VII.-16.	Summary of Land Application Sludge Disposal Designs	353
VII.-17.	Cost Summary for Land Irrigation Treatment Alternative Three	354
VII.-18.	Energy and Chemical Requirements for Land Irrigation Treatment Alternative Three	355
VII.-19.	Summary of Manpower Requirements for Land Irrigation Treatment Alternative Three	356
VII.-20.	Land Use Summary for Land Irrigation Treatment Alternative Three	356
VIII.-1.	Representative Plan 1-Sludge Handling and Disposal Data	361
VIII.-2.	Representative Plan 1-Summary Cost Sheet	362
VIII.-3.	Representative Plan 1-Land Use Summary	363
VIII.-4.	Representative Plan 1-Energy and Chemical Requirements	364
VIII.-5.	Representative Plan 1-Manpower Requirements	365
VIII.-5A	Representative Plan 2-Summary Data for St. Clair and Lenawee County Irrigation Areas	370

LIST OF TABLES

Table No.		Page
VIII.- 6.	Representative Plan 2-Sludge Handling and Disposal Data	371
VIII.- 7.	Representative Plan 2-Summary Cost Sheet	372
VIII.- 8.	Representative Plan 2-Land Use Summary	373
VIII.- 9.	Representative Plan 2-Energy and Chemical Requirements	374
VIII.-10.	Representative Plan 2-Manpower Requirements	376
VIII.-10A	Representative Plan 3-Summary Data for St. Clair and Lenawee County Irrigation Areas	380
VIII.-11.	Representative Plan 3-Sludge Handling and Disposal Data	381
VIII.-12.	Representative Plan 3-Summary Cost Sheet	382
VIII.-13.	Representative Plan 3-Land Use Summary	384
VIII.-14.	Representative Plan 3-Energy and Chemical Requirements	385
VIII.-15.	Representative Plan 3-Manpower Requirements	386
VIII.-16.	Representative Plane One-Capital Cost, Yearly Expenditures, Present Worth and Average Annual Costs; Interest Rate: 5%	390
VIII.-17.	Representative Plan Two-Capital Cost, Yearly Expenditures, Present Worth and Average Annual Costs; Interest Rate: 5%	390
VIII.-18.	Representative Plan Three-Capital Cost, Yearly Expenditures, Present Worth and Average Annual Cost; Interest Rate: 5%	391
VIII.-19.	Representative Plan One-Capital Cost, Yearly Expenditures, Present Worth and Average Annual Cost; Interest Rate: 5½%	391
VIII.-20.	Representative Plan Two-Capital Cost, Yearly Expenditures, Present Worth and Average Annual Costs; Interest Rate: 5½%	391
VIII.-21.	Representative Plan Three-Capital Cost, Yearly Expenditures, Present Worth and Average Annual Costs; Interest Rate: 5½%	391

LIST OF TABLES

Table No.		Page
VIII.-22.	Representative Plan One-Capital Cost, Yearly Expenditures, Present Worth and Average Annual Costs; Interest Rate: 7%	392
VIII.-23.	Representative Plan Two-Capital Cost, Yearly Expenditures, Present Worth and Average Annual Costs; Interest Rate: 7%	392
VIII.-24.	Representative Plan Three-Capital Cost, Yearly Expenditures, Present Worth and Average Annual Costs; Interest Rate: 7%	392
VIII.-25.	Representative Plan One-Capital Cost, Yearly Expenditures, Present Worth and Average Annual Costs; Interest Rate: 10%	393
VIII.-26.	Representative Plan Two-Capital Cost, Yearly Expenditures, Present Worth and Average Annual Costs; Interest Rate: 10%	393
VIII.-27.	Representative Plan Three-Capital Cost, Yearly Expenditures, Present Worth and Average Annual Costs; Interest Rate: 10%	393

FIGURES

		Page
I.- 1.	The Study Area	3
I.- 2.	Subareas Established	5
III.- 1.	Exiting Detroit Plant	26
III.- 2.	Existing Monroe Plant	28
III.- 3.	Existing Port Huron Plant	30
III.- 4.	Existing Wyandotte Plant	32
III.- 5.	Existing Algonac Plant	34
III.- 6.	Existing East China Township Plant	36
IV.- 1.	Southeast Michigan Sanitary Sewer Service Areas	40
IV.- 2.	Southeast Michigan Sanitary Sewer Districts - 1975	41
IV - 3.	Southeast Michigan Sewer Systems - 1990	43
IV.- 4.	AWT Schematic to Meet Corps. Criteria	56
IV.- 5.	AWT At Adrian	61
IV.- 6.	AWT at Port Huron	63
IV.- 7.	AWT At Monroe	66
IV.- 8.	AWT At Wyandotte	68
IV.- 9.	AWT At Huron River 400 MGD	71
IV.-10.	AWT At Huron River 525 MGD	73
IV.-11.	AWT At Detroit	75
IV.-12.	Stormwater Treatment Plant 125 MGD	78
IV.-13.	Stormwater Treatment Plant 125 MGD	80
IV.-14.	Stormwater Treatment Plant 400 MGD	82
IV.-15.	Stormwater Treatment Plant 600 MGD	84

FIGURES

		Page
IV.-16.	Stormwater Treatment Plant 1000 MGD	86
IV.-17.	Stormwater Treatment Plant 1200 MGD	88
IV.-18.	Stormwater Treatment Plant 1400 MGD	90
IV.-19.	IPCT Initial Process Scheme	93
IV.-20.	IPCT Plant for Port Huron	97
IV.-21.	IPCT Plant for East China - 8 MGD	99
IV.-22.	IPCT Plant for East China - 12 MGD	101
IV.-23.	IPCT Plant for East China - 36 MGD	103
IV.-24.	IPCT Plant for Detroit - 806 MGD	105
IV.-25.	IPCT Plant for Wyandotte - 125 MGD	108
IV.-26.	IPCT Plant for Wyandotte - 125 MGD	110
IV.-27.	IPCT Plant for Huron River - 525 MGD	112
IV.-28.	IPCT Plant for Huron River - 1371 MGD	114
IV.-29.	IPCT Plant for Monroe - 40 MGD	116
IV.-30.	IPCT Plant for Adrian-Tecumseh - 22.5 MGD (Peak)	119
IV.-31.	Treatment Lagoon Sites - Initial Investigations	121
IV.-32.	Flow Diagram of Typical Land Treatment System	123
IV.-34.	Typical Aerated Lagoon Module	128
IV.-35.	Typical Storage Lagoon Cross-Section	130
IV.-36.	Interconnecting Structure	131
IV.-37.	Outlet Structure with Chlorination Facilities	131
IV.-38.	Seepage Control and Sludge Drainage System	133

FIGURES

		Page
IV.- 39.	Sludge Management System	135
IV.- 40.	Wastewater Irrigation Sites	139
IV.- 41.	Design Module for Center Pivot Irrigation Rigs Giving 76% Land Coverage	143a
IV.- 42.	Design Module for Center Pivot Irrigation Rigs Giving 91% Land Coverage	143b
IV.- 43.	Design Module for Center Pivot Irrigation Rigs Giving 95%	143c
IV.- 44.	Design Module for Fixed Set Spray Irrigation	144
IV.- 45.	Design Module for Graded Boarder Irrigation	145
IV.- 46.	Design Module for Underdrain System with Tile Laterals Spaced at 33' Centers	147a
IV.- 47.	Design Module for Underdrain System with Tile Laterals Spaced at 55' Centers	147b
IV.- 48.	Design Module for Underdrain System with Laterals Spaced at 16.5' Centers and with Underground Asphalt Barrier	147c
IV.- 49.	Wastewater Treatment Design - St. Clair Site	152a
IV.- 50.	Wastewater Treatment Design - Monroe Site	153
IV.- 51.	Wastewater Treatment Design - Lenawee Site	154
IV.- 52.	Wastewater Treatment Design - Huron-Fulton-Williams Site	156
IV.- 53.	Wastewater Treatment Design - Fulton-Williams Site	157
IV.- 54.	Typical Sewage Systems Found in Southeastern Michigan	170
IV.- 55.	Storm Water Study Area	173
IV.- 56.	Frequency Distribution of Historical Data Tested Against Various Pumpout Rates and Storage Capacities to Eliminate Overflows	

F I G U R E S

		Page
IV.- 57.	10-Year Flood Peak vs Drainage Area & Population Density	182
IV.- 58.	Schemes 1 and 2 Proposed Layout, Stormwater Collection System with Surface Storage	184
IV.- 59.	Schemes 3 and 4 for Proposed Stormwater Collection and Storage	191
IV.- 60.	Schemes 5 and 6 for Proposed Stormwater Collection and Storage	196
V.-1.	Advanced Wastewater Treatment Alternative One	207
V.-2.	Stormwater Control System for AWT & IPCT Alternatives	208
V.-3.	Advanced Wastewater Treatment Alternative Two	215
V.-4.	Independent Physical-Chemical Treatment Alternative One	221
V.-5.	Independent Physical-Chemical Treatment Alternative Two	229
V.-6.	Independent Physical-Chemical Treatment Alternative Three	236
V.-7.	Land Irrigation Treatment Alternative One	243
V.-8.	Stormwater Control System for Land 1	244
V.-9.	Land Irrigation Treatment Alternatives Two	252
V.10.	Stormwater Control System for Land-2	253
V.11.	Combination Wastewater Treatment Alternative One	260
V.12.	Combination Wastewater Treatment Alternative Two	267
V.13.	Combination Wastewater Treatment Alternative Three	274
V.14.	Stormwater Control System for Combination - 3	275
V.15.	Combination Wastewater Treatment Alternative Four	282
V.16.	Stormwater Control System for Combination - 4	283

FIGURES

		Page
VI.-1.	Interim Water Quality Alternative	298
VII.-1.	Distribution of Soil Associations in the Southeastern Quadrant of Michigan	321
VII.-2.	Irrigation Zone Boundaries for Southeastern Michigan	324
VII.-3.	Distribution and Irrigation System on Hypothetical Area in Southeastern Michigan	335
VII.-4.	Drainage and Collection Systems on Hypothetical Area in Southeastern Michigan	336
VII.-5.	Land Irrigation Treatment Alternative Three	343
VIII.-1.	Representative Plan One	358
VIII.-2.	Stormwater Control System for Representative Plan One	359
VIII.-3.	Representative Plan Two	366
VIII.-4.	Stormwater Control System for Representative Plan Two	369
VIII.-5.	Representative Plan Three	378
VIII.-6.	Stormwater Control System for Representative Plan Three	379

INTRODUCTION

Scope of Report

This report investigates technical design and cost considerations involved in the development of wastewater management alternatives for municipal, industrial, and stormwater discharges to the surface waters of Southeastern Michigan. Treatment technology choices, alternative system components, and the design and cost of total alternative systems are presented.

Treatment technology choices are limited by strict design criteria which requires the highest water quality levels attainable by existing technology. The systems which have been developed for this purpose include Advanced Waste Treatment, Independent Physical-Chemical Treatment, and Land Treatment.

Alternative system components were developed from three alternatives which were based on the total use of one of the three technology choices. Alternative components resulted when systems serving individual subareas were compared. The combination of subareas, each with a potentially different technological choice, resulted in the formation of multiple technology systems.

The final design of multiple technology systems optimized on an engineering economic cost effective basis resulted in the formation of some of the alternatives. Other alternatives resulted from choices which were based on minor technical changes but which had little affect on the overall cost or water quality of the system.

Some of the alternative systems considered were based on broader regional water resources management considerations such as social well being or institutional arrangements. The selection of final alternative systems also depended on evaluations which were broader than pure engineering economics; however, the technical components did not change from those which were developed from the pure systems. In this manner the high water quality objective remains constant.

Regional Study Area

The Southeastern Michigan area, consisting of 5,372 square miles, includes seven major River Basin drainage systems: Black River, Pine River, Belle River, Clinton River, Rouge River, Huron River and the Raisin River. It is a mixture of highly urbanized, suburban, and agricultural areas in all or parts of eight counties: Oakland, Lenawee, Livington, Monroe, St. Clair, Macomb, Wayne and Washtenaw (Figure I-1).

The major cities in the study area are: Metropolitan Detroit, Port Huron, Mount Clemens, Pontiac, Ann Arbor, Ypsilanti, Adrian, and Monroe. These peripheal urban centers form a loose arc with the Detroit urban area as the hub. The total drainage area is about 145 miles long with an average width of approximately 37 miles.

The Planning Period

The planning process is designed to produce the following:

(a) An overall wastewater management plan to meet 2020 needs.
(b) A priced and evaluated portion of that plan that will meet 1990 needs.
(c) A phased early action plan for the region to meet 1990 needs.

With this task as a guide, the technical design and cost data was generated based on 1990 needs.

Wastewater Flow Projection

Wastewater flow projections have been developed in each of the five sub areas for the years 1980, 1990, 2000, 2010, 2020 and are shown in Table I-1. These projections were based on information obtained from the Great Lakes Basin Framework Study, population projections, flow projections from individual treatment plants in the area, and data obtained from permit applications to construct structures in navigable waters. This table represents the two basic collectable sources of wastewater, municipal and industrial, and includes 80% of the independently discharged industrial wastewater which is not presently collected. The decreasing flow to the year 2000 is caused by an expected increase in recycling of industrial wastewater. After optimum recycling is reached the flow increases with the increasing population.

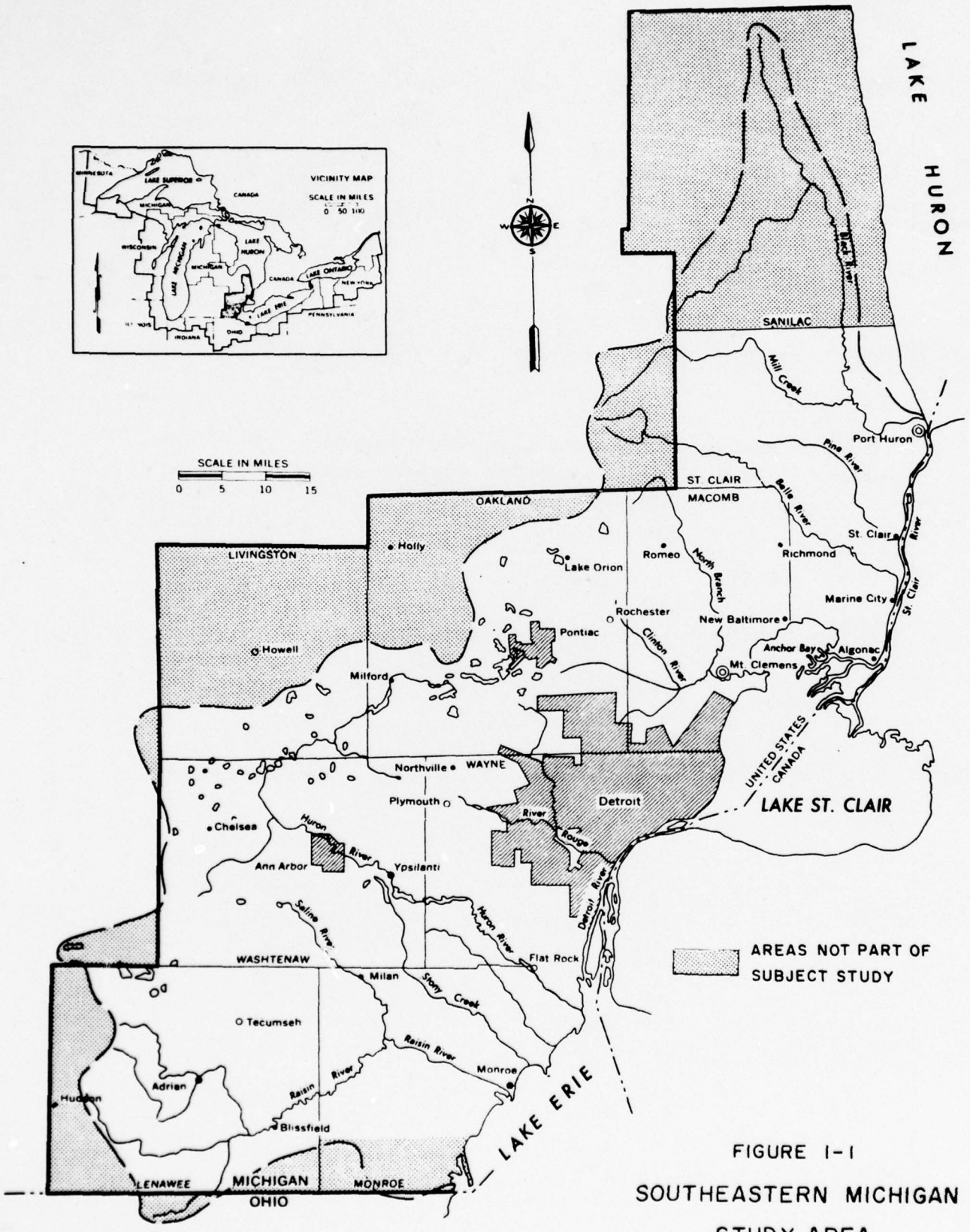

FIGURE 1-1

SOUTHEASTERN MICHIGAN

STUDY AREA

TABLE I-1

M & I Wastewater Flow Projections for Southeast Michigan

Subarea	1970 (MGD)	1980 (MGD)	1990 (MGD)	2000 (MGD)	2010 (MGD)	2020 (MGD)
I	53.7	47.9	36.0	40.4	47.4	58.8
II	715.3	684.1	688.7	685.9	787.5	926.1
III	584.4	442.2	428.9	405.6	486.6	584.4
IV	231.3	234.8	233.5	226.3	257.8	333.0
V	58.9	57.5	55.9	61.3	72.7	82.8
TOTALS	1643.6	1466.5	1443.0	1419.5	1652.0	1985.1

A map showing the five subareas is shown in Figure I-2. These were further subdivided and analyzed to determine projected flows at eight specific treatment plant locations in the year 1990. These flow projections are shown in Table I-2.

TABLE I-2

Projected Flow of M & I Wastewater to Treatment Plants in 1990

Subarea	Plant	Flow (MGD)
I	Port Huron	24
I	East China	8
I	Algonac	4
II & III	Detroit	806
III	Wyandotte	125
II, III & IV	Huron River	400
V	Monroe	40
V	Adrian-Tecumseh	12
	Minor Plants	24
	TOTAL	1,443

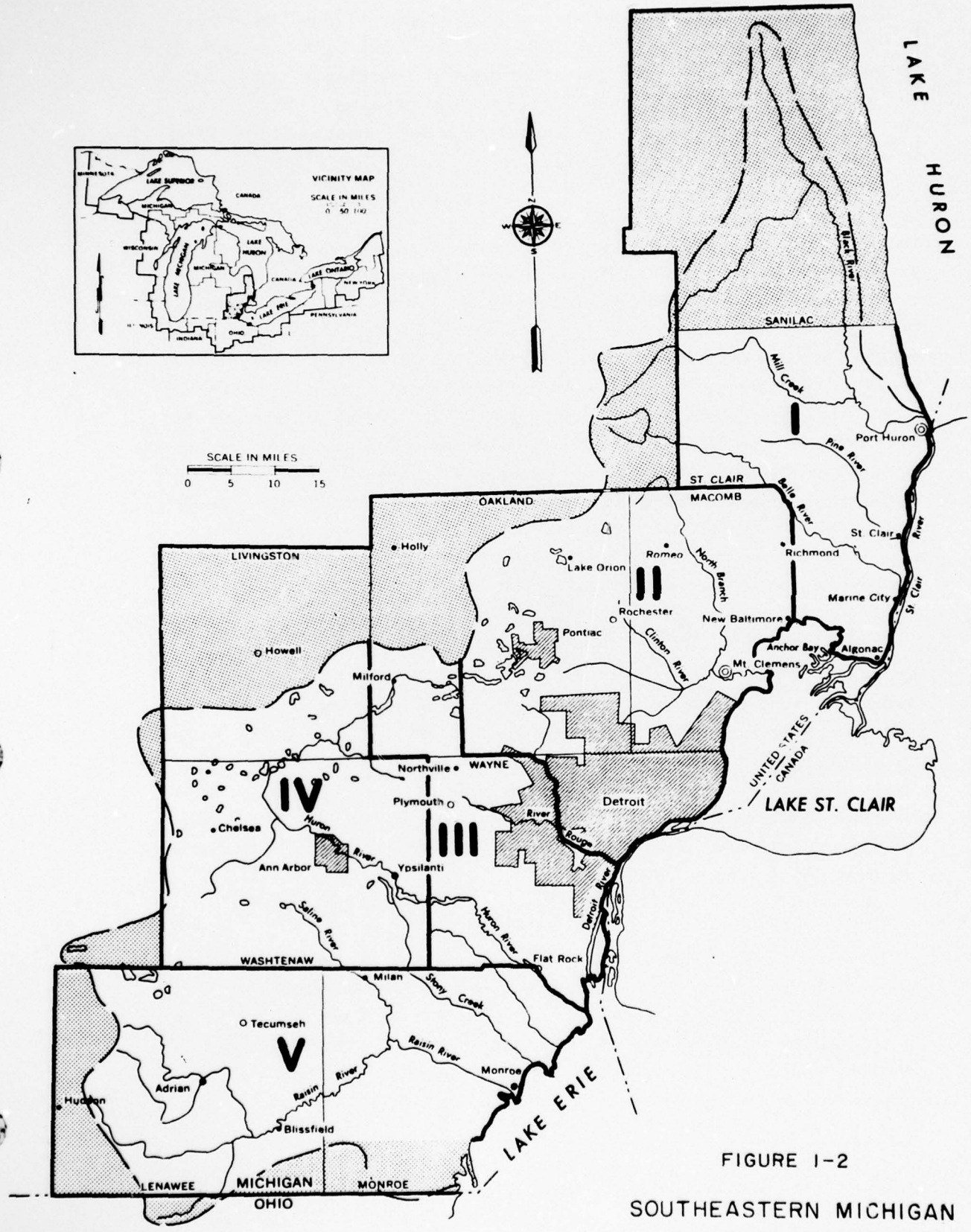

FIGURE 1-2

SOUTHEASTERN MICHIGAN
SUB AREAS

Wastewater Profiles

In order to design treatment facilities which must meet a high degree of pollutant removal and reliability, representative wastewater profiles using specific constituent concentrations must be known. Sampling and testing programs to determine these characteristics for both municipal and industrial flows and stormwater flow have been completed by others. This and other information obtained from the treatment plants themselves served as a basis for the representative values.

Municipal – Industrial – Three dry weather profiles for sanitary flow have been developed for use in designing municipal - industrial treatment plants. These profiles were developed from information presented in the Public Health Service's report on the pollution of the Detroit River, Lake Erie, and Tributaries of 1965. This information was verified, adjusted or augmented by data received from visits to existing treatment plants and discussions with the operators. A single profile has been developed to represent flow characteristics at the Detroit, Huron River, Wyandotte, and Port Huron plants. This has been determined to be representative of the municipal - industrial flows of the Southeastern Michigan Area. Separate profiles were developed for Monroe and Adrian because of specific industrial differences in these service areas. Monroe has a significant amount of paper mill waste which makes its profile different from the other Southeastern Michigan profiles. Adrian, because of its rural setting, is not as highly industrialized as the other plants. This is reflected in its individual profile. These three municipal - industrial profiles are presented in Table I-3.

Stormwater – As in most metropolitan areas in the United States, stormwater runoff in Southeastern Michigan is conveyed by combined or separate sewer systems. In order to design treatment facilities for the control of stormwater pollution, representative constituent concentrations must be determined for each type of overflow in the study area. Two sampling and testing programs to determine the characteristics of separate and combined sewer overflows were conducted in Southeastern Michigan. The constituent data from these studies formed the basis for the representative values.

The Allen Creek Drain in the City of Ann Arbor was evaluated to determine the quality of stormwater discharged from a separate storm sewer system. The Allen Creek Drain is an enclosed system of separate storm sewers serving approximately 3,800 acres primarily within the City of Ann Arbor. The area is largely developed as a residential and commercial community although there is some light industry and a small portion of the University of Michigan campus in the district.

TABLE I-3

DRY WEATHER WASTEWATER PROFILES

MUNICIPAL - INDUSTRIAL

		Detroit Huron River Wyandotte Port Huron	Monroe	East China Adrian-Tecumseh
BOD_5	mg/l	132	174	225
COD	mg/l	350	348	500
Suspended Solids	mg/l	226	143	300
Volatile Suspended Solids	mg/l	158	100	250
Settleable Solids	mg/l	129	136	N/A
Phosphates - P	mg/l	11.7	13	13
Ammonia - N	mg/l	7.5	11.3	10
Nitrates - N	mg/l	0.051	N/A	0.4
Nitrates - N	mg/l	0.002	0.011	N/A
Organic - N	mg/l	13.3	3.1	15
Cyanide	mg/l	N/A	N/A	1.0
Iron	mg/l	8.03	1.48	10
Copper	mg/l	0.36	0.07	0.5
Cadmium	mg/l	0.015	N/A	0.015
Nickle	mg/l	0.52	0.01	0.5
Zinc	mg/l	0.44	0.05	0.5
Lead	mg/l	0.16	0.13	0.2
Phenols	mg/l	588	40	N/A
Oil and Grease	mg/l	71	43	45
Coliforms	MPN/100 ml	21.6×10^6	51.6×10^6	N/A
Chlorides	mg/l	184	N/A	N/A
pH	range	6.8 - 7.5	6.6 - 7.4	N/A

N/A - Data not available

The Conners Creek gravity sewer system was examined as a combined sewer system. The Conners Creek District, is located in the northeast part of Detroit, has an area of approximately 21,000 acres and serves about 25 percent of the City of Detroit. The northern portion of the district is primarily residential and commercial and the southern portion is primarily industrial. During periods of excessive stormwater, the water is discharged into Conners Creek and the Detroit River.

The second drainage area examined as a combined sewer system is known as the Milk River Drain. Combined sewage from a residential community of 3,090 acres in Northeast Detroit, is collected at the Milk River Pumping Station. This facility is designed to pump the dry weather flow into a 72-inch interceptor with eventual discharge into the Detroit sewerage system. During storm periods. the combined sanitary and storm sewage is lifted by a means of one or a combination of two to seven storm pumps into an open concrete settling and skimming basin and eventually flows into the Milk River Drain and Lake St. Clair.

The arithmetic means of selected constituents were reported or developed from the data for these three areas. Using these values, representative constituent concentrations were determined for both combined sewer overflows and separate sewer discharges in Southeastern Michigan. These representative concentrations are shown in Table I-4.

TABLE I-4

REPRESENTATIVE CONSTITUENT CONCENTRATIONS FROM COMBINED AND SEPARATE STORM SEWER DISCHARGES IN SOUTHEASTERN MICHIGAN

PARAMETER	COMBINED	SEPARATE
BOD Mg/l	142	28
COD Mg/l	350	325
Suspended Solids Mg/l	247	1470
Setteable Solids Mg/l	238	1150
Total Phosphate Mg/l	9.5	5.0
Volatile Solids Mg/l	221	358
Oil & Grease Mg/l	45	15
Ammonia - N Mg/l	12.6	1.0
Nitrate - N Mg/l	0.5	1.5

Additional work was required to develop stormwater profiles of the influent received at the plants. This is due to the amount of separate and combined sewer discharges received at each storage site and the treatment effect of temporary storage facilities.

The effect of combining the stormwaters was determined on a percentage basis. The amount of combined and separate storm sewer discharges received at each treatment site was determined and ratios were applied to form a representative profile.

The treatment effect created by temporary storage of the wastewater was determined using data which had been taken on similarly stored stormwater. The percentage removal was applied to the previously developed profiles and the resultant profiles were produced. The resultant profiles are shown in Table I-5.

TABLE I-5

EFFLUENT PROFILES FROM STORMWATER STORAGE FACILITIES

		East China *Plymouth or Ypsilanti* Macomb County	Monroe County (1)	Monroe County (2)
BOD 5	mg/l	30	45	40
COD	mg/l	90	120	100
Suspended Solids	mg/l	400	250	300
Settleable Solids	mg/l	100	75	75
Phosphates-P	mg/l	6	7	6.5
Volatile Solids	mg/l	160	125	120
Oil and Grease	mg/l	20	30	25
Ammonia-N	mg/l	3	7	4.5
Nitrates-N	mg/l	1.5	1	1

(1) For 1,000 mgd flow rate.

(2) For 1,400 mgd flow rate.

WATER QUALITY MANAGEMENT OBJECTIVES

Program Technical Goals

Technical goals are established to serve as a basis for actual plan formulation, evaluation, and design of wastewater systems. By meeting the technical goals, the specific planning objectives of the region under consideration may be achieved. The technical goals for the wastewater management program are: 1) to prevent the continued degradation of our water resources by waterborne wastes; and 2) to provide for the efficient reuse of treated or renovated wastewater and by-products.

Design Criteria

In order to meet the technical goals, design criteria and standards were developed which would more clearly define information pertinent to technical goal areas. The criteria are:

1. "Existing" systems will serve as the base condition for developing wastewater management alternatives. These are defined as systems presently in operation, as well as, those which are presently under construction, have been funded, are authorized, and are expected to be in operation by 1975.

2. Systems must be planned to collect all waterborne wastes from urban domestic, industrial, and urban storm runoff sources; and must be compatible with present and future plans to handle sources of pollutants not dealt with specifically in this study.

3. Systems must be comprised of both structual and non-structural components and institutional aids. Non-structural components and institutional aids must be set forth when collection and transmission, treatment, reuse, and disposal components reach break points in unit cost efficiency.

4. Systems will be designed to reflect the best available technology to achieve the highest levels of wastewater treatment and reliability.

5. A system to meet State effluent standards will be developed for use as a comparison with systems designed for best existing technology.

6. Systems will be tested for cost effectiveness and given an environmental scan to assure they achieve the technical goal of minimizing water quality degradation.

Performance Criteria

The initial water quality goal of the study was to achieve the highest levels of wastewater treatment using the best available technology. Effluent criteria were established, therefore, to reflect three groups of wastewater constituents to be considered in the design process. These criteria were established based on the limits recommended by the committee on Water Quality Criteria fro water uses such as public water supply, fresh water and marine aquatic habitat, and irrigation.

Classification I applies to substances which must be absent or completely removed. This implies reduction to the limit of detectability or to the lowest level attainable by presently available advanced waste treatment technology. Constituents included in Classification I are listed below with asterisks identifying those items reported in the wastewater profiles utilized for this study.

Pesticides	Lead*
Phenols*	Mercury
Cyanides*	Molybdenum
Antimony	Nickle*
Barium	Selenium
Beryllium	Silver
Boron	Thallium
Cadmium*	Tim
Chromium	Titanium
Cobalt	Zinc*
Copper*	Arsenic

Classification II applies to substances, which along with those in the previous list, comprise the minimum number of constituents to be considered in a system design. These constituents should be reduced to specific concentrations, however, and are identified below if they were present in the wastewater profile data used in this study.

Ammonia	0.5 mg/l
Phosphorous	50 ug/l in a lake
	100 ug/l in a river
pH	6.0-8.5
Chloride	250 mg/l
Nitrates and Nitrites-N	10 mg/l
Coliform	10,000/100 ml

Classification III indicates substances which were to be given specific consideration as to their impact in each region. The following were identified as being significant in Southeastern Michigan and should be reduced to the lowest possible level using accepted processes.

Viruses	Settleable Solids*
BOD_5*	Volatile Solids*
Surfactants	Total Organic Carbon
Fecal Streptococci	Total Oxygen Demand
Taste and Odors	Gamma Radiation
Oil and Grease*	Synthetic Organics
Floatables	COD*
Suspended Solids*	

The constituents and levels contained in the preceding classifications were developed as guidance for the initial planning phases of the wastewater management program. It was recognized early in the study, however, that in order to adequately design and cost wastewater treatment facilities a list of critical pollutant levels would be required. A review of the information available on the constituents in the three classifications indicated that there was little, if any, data available on many of them in terms of what constitutes the present background level in receiving waters or what would be an acceptable level of concentration for the constituents. This was due to a historical lack of adequate monitoring efforts and the high cost of analyses. Thus, a list of specific effluent quality standards was selected based on an environmental scan of

data which was available. These are shown in Table II-1. It was felt that if these standards were met, most of the other constituents listed in the previous classifications would be reduced to a level which would approach the lowest level attainable. These pollutants would include

Table II-1

Effluent Quality Standards

BOD	4 mg/1
COD	10 mg/1
Suspended Solids	2 mg/1
Total Phosphorus	0.1 mg/1

phenols, pestisides, cyanides, most heavy metals, surfactants, oil and grease and others. Those materials, such as mercury, which could not be reduced to acceptable levels, would have to be controlled at the source. These constituents could be more easily determined after pilot plant investigations had been concluded prior to full scale implementation. The treatment system would be designed to meet these goals 90 percent of the time and never to exceed twice the listed goals.

The stated goals imply a high degree of reliability. Systems must be designed to treat to the standards listed when operating at the maximum hydraulic capacity. This would require consideration of both maximum wastewater flows and flows from internal sources within the system (e.g. Filter Backwash Water, thickener supernatant, sludge recycle, etc.) Also, consideration would have to be given to such items as: auxiliary fuel, power, and chemical sources replication of units; and flood protection.

TECHNOLOGICAL ALTERNATIVES

Wastewater Treatment Options

Historically, wastewater treatment is a relatively new technology. Although sewer networks existed during the days of the Roman empire and wastewater was utilized for irrigation during the same period, the wastewater consisted only of storm drainage. It was not until the early 1800's that human wastes were included in the sewers. During the 19th century and the early years of the 20th century most of the technology in use today was developed.

There are two general methods that can be used to treat wastewater. Wastewater can be treated in plants utilizing specific biological, physical and chemical processes with the treated water being released to the surface water near the plant location. It can also be treated by application to land where, after natural physical, biological and chemical processes have provided treatment, the water can be collected and released to surface waters. Three treatment systems which meet the high quality effluent criteria previously mentioned, have developed from these two methods. They are: Advanced Waste Treatment (AWT), Independent Physical-Chemical Treatment (IPCT), and Land Treatment.

One fact is obvious no matter what treatment option is employed, technology is available to achieve any degree of water purification desired. However, as the degree of treatment increases, energy and resource consumption likewise increase, thus, the final decision of water treatment quality will involve a trade off between water quality and resources.

Proposed Treatment Systems

All three treatment options proposed for wastewater management in Southeastern Michigan are capable of achieving high levels of pollutant removal and wastewater renovation. However, certain variations in individual treatment processes make these systems distinctly different from each other. These systems and some of the treatment processes are reviewed in the following.

Advanced Wastewater Treatment

Advanced wastewater treatment (AWT) as used throughout this report can be defined as a system which utlizes the conventional preliminary, primary, and secondary processes as a base with additional, or tertiary, processes being used to achieve a higher quality treatment.

Preliminary treatment, also known as *pre-treatment*, consists of a combination of physical processes for removal of coarse solids and abrasive materials. Bar screens and racks and grit chambers are normally employed. Comminutors or sewage grinders may also be utilized in this phase of treatment.

Primary treatment utilizes a low velocity basin for removal of materials which either float to the surface or settle from solution unaided. In modern treatment plants, primary treatment is carried out in self-cleaning steel or concrete basins. Septic tanks, lagoons or any low turbulence water body can be utilized for primary treatment. Up to half of the total pollution load from municipal sewage can be removed by this simple operation.

Secondary treatment is normally considered to be an operation in which bacterial action is encouraged to promote reduction of dissolved organic materials in the wastewater. The operation can be carried out in: unsophisticated oxidation lagoons requiring little energy or attention; aerated lagoons in which air is induced either mechanically or through diffused air devices; trickling filters in which the wastewater is distributed over rock or plastic media on which bacteria grow; activated sludge plants in which bacteria laden sludge flocs are mixed with wastewater in aeration tanks; or in any of several other similar process units.

Tertiary treatment is a rather vague term which refers to any treatment beyond the secondary level. In order to achieve the effluent quality goals of this study, a high level of tertiary treatment would be required to reduce concentrations of phosphorus, nitrogen, suspended solids, dissolved organic materials, several metallic ions and other undesirable constituents. Processes which may be utilized to achieve this advanced treatment include: chemical clarification, nitrification-denitrification, filtration, chemical oxidation, activated carbon adsorption, and a host of "ultra-purification process". Many of these processes are identical with those used in independent physical-chemical treatment systems and will be discussed later. One exception, nitrificationenitrification is a biological process and is discussed below.

Nitrification - Denitrification is employed for removal of ammonia and nitrate nitrogen. A biological process similar to the activated sludge process is employed to convert ammonia nitrogen to nitrate, thus the term nitrification. Denitrification, or conversion of nitrates to nitrogen is also a bacterial process. Methanol is added during denitrification to promote bacterial activity. The process is complete when nitrogen is liberated from solution as nitrogen gas.

Advanced wastewater treatment results in several secondary wastes: grit and screenings from preliminary treatment, primary sludge, waste activated sludge, and chemical sludges. These waste materials present problems of major significance in design of a wastewater treatment plant. A discussion of sludge handling techniques follows the discussion of independent physical-chemical treatment.

Independent Physical Chemical Treatment

Rather than adding treatment processes to a conventional secondary plant to achieve high treatment quality, some engineers looked to the possibility of developing new processes to treat raw wastewater to a high quality. Independent physical-chemical treatment (IPCT) was one method developed. In IPCT, raw wastewater receives normal preliminary treatment after which physical and chemical processes are utilized to reduce concentration of pollution constituents. The following paragraphs will describe many of the processes employed in IPCT.

Clarification is generally employed to separate settleable suspended solids from wastewater. Through addition of chemicals and controlled mixing, as high as 99 percent of the suspended solids can be removed. Chemical clarification can also remove most of the soluble phosphorus and metal ions normally found in wastewater. Pilot plant studies have demonstrated that a well designed chemical clarification system can achieve the equivalent of secondary treatment.

The *chemical clarification* process consists of chemical coagulation results in formation of insoluble chemical precipitates and the stabilization of colloidal particles suspended in the wastewater. Flocculation, the agglomeration of coagulated particles, is aided by gentle agitation of the wastewater. Sedimentation, the final step, is greatly influenced by the particle size and density achieved in the first two steps. Lime, alum, ferric salts, ferrous salts and a variety of polymeric organic chemicals may be used as coagulants either singularly or in combination. Choice of coagulants and dosages should be based on laboratory coagulation-flocculation tests, on pilot testing using the wastewater for which the plant is being designed, and on coagulant cost and availability.

When designing an IPCT plant, chemical clarification would normally follow the pretreatment processes. However, that is not always the case. Depending upon how sludge will be dealt with, a primary clarification step may preceed the chemical clarification process. In an AWT system, chemical precipitation usually follows secondary treatment and is used primarily for the removal of phosphorus and metal ions.

Filtration is used in wastewater treatment primarily to remove suspended solids not removed in preceding operations. It may be employed either as a final treatment or as a pretreatment to a process sensitive to suspended solids. Filter designs vary from simple gravity sand filters to the highly efficient precoat filters. Selection of the type of filter depends upon effluent quality desired and the application.

The mechanisms of filtration are: straining, inertial impaction and interception. There are, however, many other mechanisms which come into play when filtering wastewater including: sedimentation, physical and chemical adsorption, coagulation-flocculation and biological action. Variables which affect filtration efficiency include particle size and distribution, suspended solids concentration, degree of flocculation and floc shear strength, filtration rate, filtration pressure, and filter media size, shape and size distribution.

To obtain most efficient use of a filter, and thus reduce frequency of backwash, distribution of filter media size should be such that wastewater first encounters coarse particles followed by progressively smaller particles. This allows use of the entire filter depth rather than only the initial surface. The requirement for backwashing causes problems, however, since bed expansion during backwash causes inversion of the filter media. The "ideal" filter has been approached by the multi-media filter which utilizes materials of varying density. Larger particles have low density while smaller particles have progressively higher density.

Adsorption on activated carbon is used in wastewater treatment primarily for removal of dissolved organic materials. The adsorption process depends on attractive forces between molecules in solution and the surface of the adsorbent material. These forces cause the molecules to attach themselves to the adsorbent surface. Activated carbon will effectively adsorb many organic wastewater constituents not affected by conventional biological treatment processes in addition to those organic constituents for which conventional biological processes are effective. Adsorption is thus applied either following or in lieu of conventional biological treatment processes. The adsorption process is a reaction which approaches an equilibrium condition. To get maximum utilization of carbon adsorption capacity, the adsorption equilibrium must be considered. A carbon which has reached equilibrium in a wastewater low in organics would still have adsorption capacity in a more concentrated wastewater; thus to get maximum utilization of carbon, counter-current contacting (i.e., fresh carbon in contact with less concentrated wastewater) should be employed when possible.

Activation is a process which produces many pores within the carbon particles, and it is the vast areas of the walls within these pores which accounts for most of the total surface area of the carbon. The fact that activated carbon has such an extremely large surface area per unit weight makes it an extremely efficient adsorbent material.

Activated carbon is available either as a powder or in granular form. The granular form is preferred for wastewater applications as it creates fewer handling and regeneration problems. Design of contactors for granular carbon is very unrestrictive. Columns can be operated either in an up-flow (expanded bed) or down-flow (packed bed) configuration with no significant difference in adsorptive capacity. The expanded bed contactor requires less hydraulic head for operation and less frequent backwashing. The packed bed column, however, can serve both as an adsorption column and a packed bed filter. Contactors can be designed at treatment rates of 1-10 gpm/ft^2 and bed depths of 5-30 ft., and may be sealed pressure vessels or open gravity flow tanks.

There are presently three alternatives for *removal of ammonia* from wastewater in an IPCT plant: ammonia stripping, ion exchange and breakpoint chlorination.

Ammonia stripping has received a good deal of attention due to its use in the South Lake Tahoe plant. In the process, wastewater is raised to pH of greater than 11.0 and air is contacted with the wastewater to adsorb the volatile ammonia. Standard industrial cooling towers or specially designed stripping units can be used. The use of lime as a coagulant in chemical clarification can produce the alkalinity required. The process has several drawbacks: ammonia is transferred from the water to the atmosphere (Systems proposed for reclaiming ammonia from stripping gases have not solved the problem of ultimate disposal); problems result from calcium carbonate scale formation on process equipment, and efficient operation requires air temperatures well above 32° F.

Selective *ion exchange* is an effective process for removing ammonia from wastewater. In pilot plant studies, residual levels of less than 0.5 mg/l have been obtained, however, consistent levels of 2.0 mg/l cannot be guaranteed. In ion exchange there is also the problem of ultimate disposal of ammonia.

Unlike ammonia stripping and ion exchange, *break-point chlorination* is capable of removing ammonia nitrogen to any desired level to 0.1 mg/l. Pilot plant studies using break-point chlorination have shown that the degree of ammonia removal can be controlled by merely controlling the ratio of chlorine to ammonia in the feed water.

Several *ultra-purification* processes are under investigation which can produce water of very high purity. None of these processes have yet been applied to any large flows and all produce either a waste brine solution or a highly soluble sludge which requires ultimate disposal. Some of these processes are: ion exchange, reverse osmosis, electrodialysis, freezing and distillation.

Ion exchange involves a chemical reaction in which an ion from the insoluble exchange material is displaced by an ion from solution. since ion exchange is a reversible reaction, the exchange material, or resin, can be regenerated by contacting it with a solution highly concentrated in the initial ion. Ion exchange can effectively remove most metal ions and ammonia from solution, however, the concentrated regenerant solutions *e.g. hydrochloric acid, sodium hydroxide, sodium chloride* must be disposed of. Also since this is an "exchange" process, some ion, normally sodium, must ultimately remain in solution.

Reverse osmosis is essentially a high pressure (400-1500 psi) membrane filtration process. An ideal osmotic membrane would permit only water molecules to pass while restricting passage of all other materials. In a situation where solutions of differing concentration are separated by a membrane, the less concentrated solution will exert an osmotic pressure on the membrane. The required pressure to reverse the osmotic tendency increases as the concentration difference across the membrane is increased, thus the greater the ratio of purified water to waste brine, the greater the energy expenditure required.

Reverse osmosis can effectively reduce dissolved solids to less than 60 mg/l. Its drawbacks, however, are numerous. Under optimum conditions, 90 percent of the influent water can be reclaimed; the remaining 10 percent must be disposed of as a liquid waste. Concentration of hardness in water on the waste side of the membrane can result in formation of calcium deposits, thus reducing efficiency.

Electrodialysis is another membrane separation process for producing high quality reuse water. Transport of contaminant ions through the membrane is encouraged by application of an electrical potential, causing negatively charged ions to move toward the positively charged electrode and positively charged ions to proceed toward the negative electrode. Non-polar molecules would not be affected. The system lacks the overall efficiency obtained from a reverse osmosis process since the elctrodialysis process removes charged ions from the water solution while the reverse osmosis process removes the water from the solution.

Up to 50 percent of the dissolved solids can be removed in a single pass through an electrodialysis unit. Multiple stage units can attain increasingly higher efficiences. Operation problems are similar to those encountered with reverse osmosis including scaly formation and waste brine disposal. In addition a large source of DC electrical power would be required.

Freezing is another effective process for producing water low in dissolved solids. When water is frozen slowly, ice will crystallize from solution and if separated and re-liquified, a very high quality water can be obtained. The freezing process has not been fully investigated due to the high refrigeration costs involved. Brine disposal and scaling would continue to be a problem.

Distillation has long been an effective process for water purification. In distillation, water is vaporized, the collected vapors are then condensed back to a liquid. Heat requirements are excessive and heat dissipation would be a problem. Distillation also has the problems of scaling and brine disposal. Multiple stage vacuum distillation presently shows promise only on a small scale where high purity resue water is required.

In general, the only "ultra-purification" process which shows any promise in a wastewater treatment application is ion exchange. The remaining processes would only be practical in obtaining a high quality reuse water since ultimately the same quantity of dissolved solids must be disposed of whether as a 300-800 mg/l treated wastewater or as a 2000-7200 mg/l process waste from one of the "ultra-purification" processes.

Disinfection is necessary in wastewater treatment to reduce pathogenic viruses and bacteria to a safe level prior to discharge or reuse. In a physical-chemical wastewater treatment plant, disinfection is accomplished cumulatively through the process, however, a final disinfection process is necessary to insure successful disinfection. Culp and Culp report 99 percent removal of viruses and total coliform through the tertiary treatment system at Lake Tahoe. The system consists of two-stage lime clarification (with ammonia stripping) followed by activated carbon adsorption.

The most often employed disinfection process is chlorination, although ozonation has also been applied with excellent results. The major disadvantage cited for chlorination of sewage as a disinfection process is the reaction with ammonia to form chloramines. Chloramines have lower bacteriacidal and viricidal potential than free chlorine; and both chlorine and chloramines form residuals in the wastewater which affect the biota in the receiving waters. Chlorine is most effective in water as a hypochlorous acid (HOCl), as much as two orders of magnitude more effective as a viricide then the hypochlorite ion (OCL) and many times more effective than chloramines. As the hypochlorous acid is favored in an acid solution, it is desirable to have a pH less than 7 to reduce contact time required. When chlorine gas is dissolved in water, it creates an acid condition in the water.

Sludge handling processes for AWT or IPCT systems are much the same as most of the methods employed for treatment and disposal of sludge wastes generated during conventional treatment, with the exception of chemical sludges which may require special handling techniques depending upon the chemical employed.

To achieve the wastewater treatment quality required for these designs, the advanced wastewater treatment scheme will require chemical clarification as a separate process from the clarification utilized in secondary treatment. The sludge wastes generated would be: screenings, grit, scum, primary sludge, waste activated sludge and chemical clarification sludges. Screenings and grit are easily dewatered and generally pose no disposal problems. Primary and waste activated sludge are generally difficult to dewater and can present handling and disposal problems. Chemical sludge characteristics depend upon the chemical employed. If lime is utilized, sludges are produced in greater quantity than is found with other coagulants but are generally more easily concentrated and dewatered. Sludges generated through use of metal salts (e.g. alum, ferric chloride) are difficult to concentrate and dewater and thus difficult to dispose of.

Sludges from IPCT systems consist of screenings, grit, scum and either primary sludge and chemical sludge or a mixture of primary and chemical sludges. The choice of whether primary treatment would preceed chemical clarification would depend upon the character of the wastewater, the chemical to be employed and the method of sludge handling to be employed. Some design engineers claim an advantage to separating primary and chemical sludges in IPCT plant design. The advantages claimed are mainly centered around the use of lime and lime sludge recalcination in chemical clarification. One argument is based upon the idea of reducing the ash content of the recalcined lime sludge, thus increasing the amount of lime which could be reclaimed. The amount of ash reduction however, is not large since over half of the total sewage sludge and all of the phoshpate sludge would be removed in the chemical clarification process. Also, if the two are combined, the need for auxiliary fuel in the recalcination process would be reduced. Another argument for maintaining the sludge separation is that if the sludges are mixed, there is a loss of sludge value as a fertilizer material. Recent research (not yet released for publication) indicates that raw lime and alum sludges can be applied to the land for disposal resulting in an increase in soil productivity. It is felt at this time, therefore, that the cost of maintaining a separation of sludges cannot be justified. Subsequent discussion is thus based on a system without primary clarification.

Sludge handling processes generally include three categories: treatment and dewatering, transportation, and ultimate disposal. The order of the three can vary depending upon the sludge handling scheme selected.

Sludge treatment processes can serve several functions: conditioning of sludge to aid dewatering, sterilization, deodorization, oxidation, and volume reduction. Some sludge treatment processes include: thickening, aerobic digestion, anaerobic digestion, heat treatment (Porteus process and Zimpro process), chemical conditioning, elutriation and incineration.

Some form of *thickening* process would be required for all wet sludges under study. Either gravity or air floatation thickening will reduce sludge volume by greater than 100 percent of its original settled volume. In smaller plants the lower part of the clarifier basin will serve the function. If waste activated sludge is generated a separate thickening process is normally required.

Both *aerobic* and *anaerobic digestion* depend on bacterial action to oxidize volatile solids, reduce odor potential and aid in sludge dewatering. The processes would normally be used prior to landfill or agricultural utilization of the sludge. One advantage claimed for anaerobic digestion is that it produces a by-product of methane gas. Both processes, on the other hand, are highly susceptible to upset by toxic materials and require as much as two weeks before returning to normal operation efficiency. Reports to date indicate that coagulant chemicals with the exception of lime at high pH do not interfere with either process.

Heat treatment processes can have an advantage over other "wet" treatment processes in that the resultant product is sterilized. Both the Porteus and Zimpro processes utilize elevated temperature (290° F. to 600° F.) and pressure. From a health standpoint, heat treatment would be the best treatment alternative prior to landfill or agricultural application of sludge (lime sludge would be an exception since the high pH has a sterilizing effect).

Either *elutriation* or *chemical conditioning* may be utilized to increase sludge filterability. Elutriation is a simple rinsing process used to reduce concentration of chemicals which interfere with dewatering. Chemical conditioning may be utilized singly or following elutriation. Chemicals such as lime, ferric chloride and several polyelectrolytes when mixed with sludge, greatly enhance dewaterability.

Incineration is most often employed when volume reduction is desired prior to landfill. In the process, dewatered sludge is dried then burned at from 1500°F to 1800°F. The drying process may be carried out separately however, the normal procedure is to utilize waste heat from sludge incineration to dry the sludge in the same unit. Raw sewage sludge may have a heat value of up to 10,000 BTU per pound while a mixture of primary and waste activated sludge may have a heat value of from 5500 to 7500 BTU per pound. The heat value of dry sludge is more than sufficient to maintain combustion; the amount of auxiliary heat required is thus a function of the moisture content of the sludge cake.

When lime sludge is incinerated, the process is known as *recalcination* since calcium carbonate produced during lime clarification is re-converted to calcium oxide or lime. The reaction requires 4.25 million BTU per ton of lime produced in addition to heat required for sludge drying. The amount of lime which may be recycled to a chemical clarification process would be a function of the ash content of the recalcination product.

Incineration equipment normally employed includes multiple hearth, rotary kiln, and fluidized bed furnaces. Additional equipment would be required to control air emissions. Modern incinerators with high efficiency wet scrubbers can produce a particulate emission of less than .03 grains per standard cubic foot consistantly. Sulfur oxide and nitrous oxides emissions are of much lower magnitude than found in high temperature boilers.

Several processes can be used for *dewatering* sludge vacuum filtration, pressure filtration, centrifugation, vibration, or in sludge drying beds. With the exception of sludge drying, the selection of the process must be based on tests made with the sludge to be handled. Vacuum filtration is the most universally used process; however, the other processes are competitive in cost and may produce a dryer filter cake for some sludges. Sludge drying beds are normally considered only for small plants where the land requirement would not be excessive.

Primary and waste activated sludges dewater poorly unless treated by one of the previously discussed processes. Sludge cake of 20 to 30 percent solids are common. Equipment manufacturers claim solids concentrations in excess of 40 percent following heat treatment. In general lime precipitated sludges dewater better than other chemically precipated sludges yielding a filter cake moisture of from 40 to 60 percent solids. Sludges resulting from use of alum or iron salts retain moisture and yield solids content of only 20 to 30 percent solids.

Sludge transportation to the site of ultimate disposal can be accomplished by several methods. Liquid sludge may be carried by pipeline, tank truck, barge, or railroad tank car. Solid and semi-solid waste may be trucked, shipped, or rail transported. Selection of a mode of transport would depend upon sludge quantity and form, method of ultimate disposal and available transportation networks.

The choice of *ultimate disposal* of sludge is dependent upon the treatment technology employed. Incinerator ash can be used as a fill material; or it could have value as a construction material. Cleaned grit also has a potential use as fill material. Other forms of sludge seldom offer sufficient stability for fill.

A sanitary landfill should not be confused with previously mentioned fill. In a sanitary landfill, special precautions must be taken for ground water contamination from leacheate. Also, land reuse possibilities are much more limited for an exhausted sanitary landfill site. All forms of dewatered sludge can be disposed of by landfill. Regulations in the State of Michigan regarding disposal of sewage sludge in a sanitary landfill holding other forms of solid waste, require the sludge to have a moisture content of 50 percent or less. Any sludge cake may be disposed of by sanitary landfill techniques if that landfill is used solely for sludge disposal.

A third alternative for sludge disposal offers a potential reuse value as an agricultural soil supplement. Sludges from most any of the treatment processes which sterilize and deodorize the sludge, can be utilized for this purpose. Sludge application rates should be based on uptake capacity of crops and the soil. A conservative estimate is 10 tons/acre/year; however, some research being done by EPA indicates that much higher rates may be possible.

Land Treatment

The Land Treatment system for wastewater management allows soil and growing plants to remove potential pollutants which might otherwise be limited by sophisticated treatment processes. A land treatment system is composed of various components which make use of natural process to renovate the water. A brief discussion of these components follows.

Pretreatment Facilities and Treatment Lagoons prepare the wastewater for land application. Raw wastewater arrives at the treatment site with its daily load of bulky floating and suspended matter, oil and grease, and heavy and coarse suspended matter. Bar screens and racks, skimming tanks, and grit chambers, remove this material and prevent it from interfering with later processes. This material is then taken to a landfill and disposed of.

Treatment lagoons provide the equivalent of secondary treatment prior to land application. Biochemical Oxygen Demand (BOD) is reduced 70 to 90 percent by an active mass of microorganisms in the lagoons that feed on the organic content of the wastewater and reduce the degradable organic content to an acceptable level for the storage lagoons. The amount of dissolved oxygen available in the lagoons is critical to the decomposition process and can be supplemented by the use of aeration devices. In addition to entraining and dissolving oxygen to support the biological growth, these aeration devices provide sufficient mixing to disperse the dissolved oxygen and to suspend the solids during aeration. This mixing action also prevents anaerobic conditions and sludge settling problems.

Storage Lagoons and Chlorination Facilities maintain the prescribed flow and control harmful microbes. Wastewater can be applied to the land only during certain times of the year. Storage Lagoons must be provided therefore, for the nonoperational time such as winter months and periods of heavy rainfall. In addition to their primary function, storage lagoons serve other purposes. They also act as settling basins for the partially treated wastewater which enters from the treatment lagoons and, during ice free periods, stabilize the remaining BOD by natural surface aeration and photosynthetic activity.

The hygienic effect of land application of sewage effluent is an important consideration. In order to limit the hazard of the spread of potential disease organisms the effluent is chlorinated prior to irrigation. The disinfection facilities, usually chlorination, are constructed as a part of the storage lagoons. Chlorination takes place at the outlet of the lagoons with the required contact time and dechlorination time being accomplished in the open channels leading to the irrigation distribution system.

Irrigation and Collection Facilities distribute and reconsolidate the wastewater. When wastewater is applied to land, soild and growing plants remove potential pollutants before the water is collected in underdrains for reuse and/or discharge into streams or lakes. Irrigation is the method of applying wastewater to lands. Center pivot spray irrigation, fixed set spray irrigation, and graded border and furrow irrigation are specific irrigation techniques which can be used.

The systems can be powered by water, oil-hydraulic, or electric motros. The electric motor drive with worm gear at the wheel is recommended because of reliability, ease of start-stop control, and low maintenance. Power and control cables will come underground from a central control house to the pivot points.

Another type of spray irrigation is a *fixed set system*. This system employs permanent underground pipes delivering water to risers containing spray nozzles. It provides an alternate spray irrigation system to the center pivot rigs and their associated high water application rates.

Graded border irrigation is a method of applying water to land between parallel ridges or borders. The strips of land between adjacent borders have little or no cross slope, but have a grade in the direction of irrigation. The parallel ridges are usually called levees. The strips of land between the levees are usually called strip checks.

The irrigation water is applied to the upper end of the strip checks from either open ditches or low pressure underground pipes. The water travels by sheet flow over the strips until infiltrating the soil surface.

After the effluent from the treatment and storage lagoons has passed through the "living filter," the renovated water is collected in tile underdrain systems and flows by gravity through submains and mains to the lower edge of an underdrain module. At this point, the collected percolate is lifted by low head pumps and discharged into open canals for transmission to a reuse storage facility or discharged into surface waters.

Since the collected percolate has been through the renovative cycle, it is not necessary to keep it separated from the groundwater for contamination reasons. Therefore, unlined canals can be used for the collected percolate transmission. Lining of these canals may be required for short sections of highly pervious soils in order to prevent hydraulic overlaod of adjacent underdrains.

Existing Wastewater Treatment Facilities

Six major existing municipal and industrial treatment plants were identified as having potential for inclusion into a regional wastewater plan for Southeastern Michigan. In order to take maximum advantage of these existing facilities, an evaluation was made of each plant to determine the feasibility of fitting existing unit processes into the new treatment arrangements.

For the purpose of this investigation, existing facilities are designated as those presently in operation, those now under construction, and those which are planned and will be constructed prior to about 1975. Flow schematics and descriptions of existing facilities have been developed from information obtained from field inspections, design outlines, and detailed plans and specifications. Data is presented for the plants at the following six locations which have been incorporated into the master plan for municipal and industrial wastewater treatment for the study area.

Detroit Metro Wastewater Treatment Plant

Monroe Wastewater Treatment Plant

Port Huron Wastewater Treatment Plant

Wyandotte Wastewater Treatment Plant

Algonac Wastewater Treatment Plant

East China Wastewater Treatment Plant

Detroit Metro Wastewater Treatment Plant A flow schematic of the existing facility is shown in Figure III-1. Raw wastewater arrives at the plant through 12 and 16-foot diameter interceptor sewers. The average daily flow has recently been about 750 mgd with a maximum daily flow of 1,400 mgd. Peak daily rates of about 900 mgd occur exclusive of wet weather flow. Two 115 mgd, four 150 mgd, and two 180 mgd centrifugal pumps lift the wastewater about 40 feet to mechanically cleaned bar screens. Either constant velocity grit chambers, 125 feet long, with mechanical scrapers, follow the bar racks.

Primary sedimentation is accomplished in 12 old rectangular and two new circular clarifiers. Each rectangular tank is 243 feet long with seven 14-foot wide flights for sludge collection and scum removal. The average water depth is 14 feet. The two new primary circular clarifiers are 250 feet in diameter with a sidewater depth of 11 feet and a center depth of about 28 feet. They are center feed type with peripheral weirs.

Primary sludge of about 0.8 to 1 mgd is presently dewatered on twelve cloth media vacuum filters each with a 505 square foot area. Polymers are the only chemicals used for sludge conditioning. Sludge drying lagoons are available for standby holding, should vacuum filters be inoperative. Filter cake is incinerated in six incinerators equipped with wet scrubbers to control air pollution. Construction is proceeding on sixteen new vacuum filters, each with an area of 754 square feet, and with building space provided for a total of 20 new units. Construction is also underway for six new sludge incinerators.

An expansion currently is underway at the Metro plant, costing approximately $200 million. Improvements consist of the previously mentioned vacuum filters and incinerators as well as activated sludge aeration tanks and final settling tanks. It is anticipated that the expansion will be completed and in operation by November, 1973.

The planned activated sludge aeration tanks are being constructed in a manner which permits comparison of conventional aeration with oxygenation. Two identical tanks are being constructed side by side. One, utilizing conventional air, is designed as a step aeration unit and is rated at 150 mgd. The other tank is constructed for pure oxygen application with a four stage flow-through patterns and is rated at 300 mgd capacity. The aeration tanks will be 30 feet deep and aeration will be accomplished by the use of air diffusers located approximately 15 feet from the tank bottoms.

Eight new 200-foot diameter rim feed-rim discharge final clarifiers are presently under constuction. Waste activated sludge and primary sludge will be mixed and thickened in six gravity thickeners.

Primary effluent from the existing plant is chlorinated with the effluent conduit to the Detroit River providing the required contact time. New chlorination facilities are being constructed that will provide 15 minutes contact for a flow of 1,400 mgd. Effluent from the expanded plant will be discharged to the River Rouge.

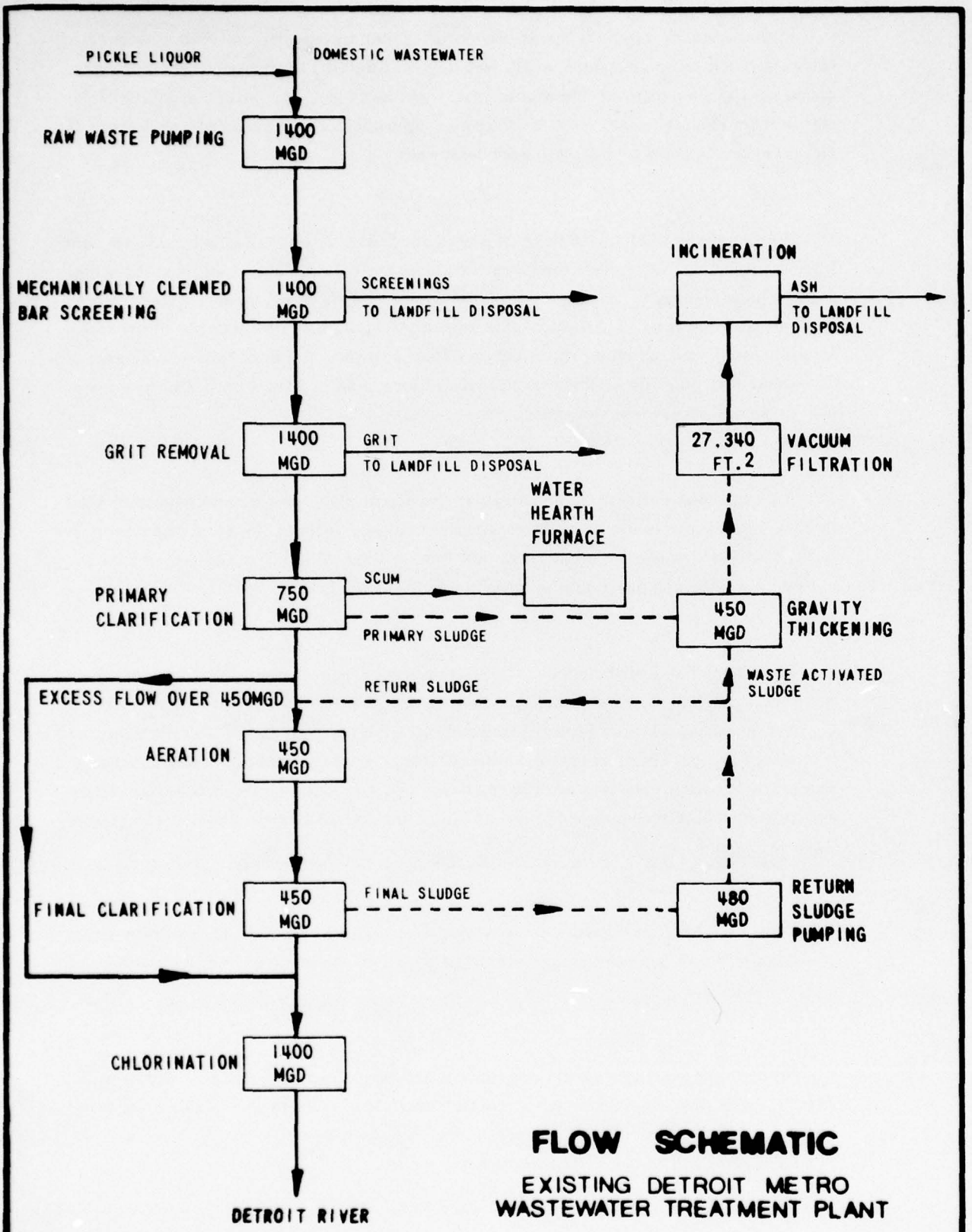

FLOW SCHEMATIC

EXISTING DETROIT METRO WASTEWATER TREATMENT PLANT

FIGURE III - 1

STANLEY CONSULTANTS

Monroe Wastewater Treatment Plant Monroe is completing construction of a new secondary (activated sludge) treatment facility to treat a combination of domestic and paper mill wastewaters. The old primary treatment plant will be used for treatment of the domestic portion of the wastewater stream only. The domestic wastewater flow averages between 5 and 6 mgd while paper mill flows are anticipated to be 16 to 17 mgd. A schematic diagram of the facility is shown in Figure III-2.

At the old primary facility, raw domestic wastewater first passes through a mechanically cleaned bar screen sized to handle hydraulic flows up to 26 mgd. Screenings are hauled away to a landfill. Screened wastewater is lifted to a detritor grit chamber with a maximum capacity of 11.2 mgd. Three constant speed raw waste pumps with capacities of 2, 4, and 6 mgd are provided along with one 6 mgd variable speed unit. Flow is metered through a venturi tube, prior to passing to two circular primary clarifiers, designed for a total flow of 9.6 mgd.

The new secondary treatment facilities recently placed in operation are designed to treat paper mill wastewaters along with the domestic primary effluent. The combined flow first passes through a mechanically cleaned bar screen. Three 18 mgd variable speed pumps lift the wastewater to the six aeration basins.

Each aeration basin consists of two chambers. The flow pattern permits operation as either a plug flow or step aeration process. The basins are designed for a 24 mgd flow, a detention time of 6 hours, and a design loading 48 pounds BOD / 1,000 cu ft/day.

Four final clarifiers are provided, each 105 feet in diameter with a side water depth of 12 feet. A chlorine contact tank provides 15 minutes detention for a flow of 36.5 mgd, prior to effluent discharge to the River Raisin.

Two flotation units, of the partial pressurization type, by Rex Chainbelt, are used for thickening waste activated sludge. The units, each with a surface area of 800 square feet, are expected to thicken the waste activated sludge to 4 percent solids.

Existing old anaerobic digesters will be used as sludge holding tanks. Sludge dewatering will be accomplished with two coil vacuum filters with a total area of 720 square feet. Equipment is provided for sludge conditioning with ferric chloride and lime. Sludge will be incinerated in a multiple-hearth furnace, equipped with wet scrubbers, presently in the design stage. It is anticipated that the incinerator will be in operation in 1974.

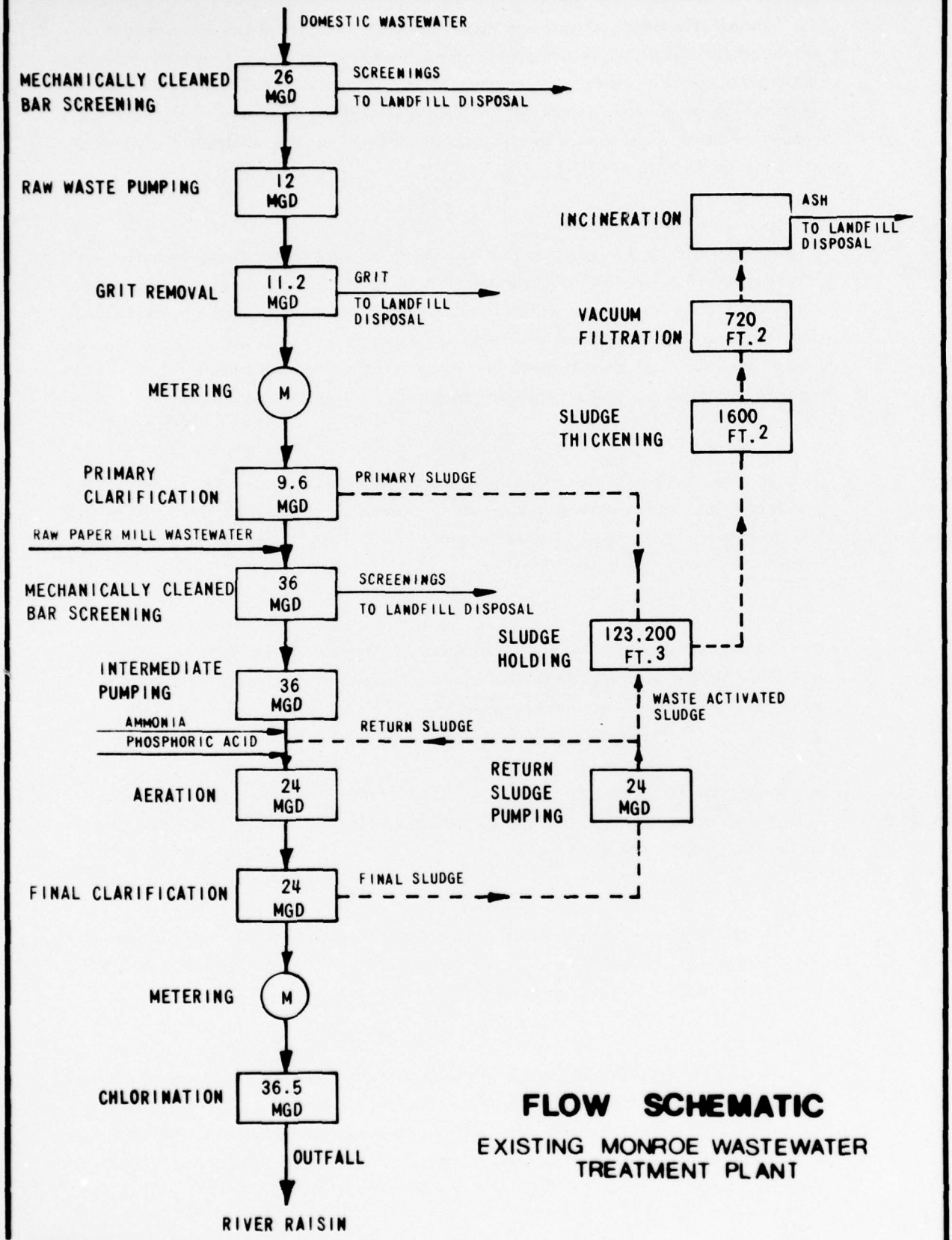

FLOW SCHEMATIC

EXISTING MONROE WASTEWATER TREATMENT PLANT

FIGURE III-2

STANLEY CONSULTANTS

INTERNATIONAL CONSULTANTS IN ENGINEERING, ARCHITECTURE, PLANNING AND MANAGEMENT

Port Huron Wastewater Treatment Plant The Port Huron plant is located on the bank of the St. Clair River at the junction of the Black River, south of Lake Huron. This site is just downstreatm from the downtown business area and is surrounded by commercial and residential establishments. The plant serves a Port Huron population of approximately 40,000. The City has combined storm and sanitary sewers with by-pass structures for stormwater overflow.

Bids were opened May 24, 1972, for new secondary treatment facilities that also include remodeling of portions of the existing plant. A flow diagram of the facility including proposed modifications is shown in Figure III-3.

Extensive revision to existing facilities is planned. A contract was awarded in the spring of 1972 and it is anticipated that the new expansion will be in operation by late 1975. Bar screens will be modified to pass flows up to 60 mgd. Existing electric pumps will be replaced with new pumps to bring the total capacity to 60 mgd. Existing gas engine pumps will be retained as standby units.

The existing grit removal facilities will be replaced with three new aerated grit chambers with mechanical scum and grease removal facilities for a maximum flow of 60 mgd.

Eight new rectangular primary settling tanks will provide for a flow of 12 mgd. Chemical treatment facilities will be provided for phosphate removal. This will bring the total treatment capacity to 24 mgd.

Maximum hydraulic capacity of the preliminary and primary treatment system will be about 60 mgd. A primary effluent reservoir with capacity of 6 million gallons will reduce the peak wet weather flow to the secondary portion of the plant. High flows from 33 to 60 mgd will be diverted to the basin and then pumped back through the aeration tanks as the flow returns to normal. Three step-aeration tanks will provide for treatment of a maximum of 33 mgd.

Three final settling tanks will provide a total capacity of 33 mgd at two hours detention time. Waste activated sludge and primary sludge will be stored in the existing sludge digesters which will be converted to sludge holding tanks. Sludge treatment will consist of heat treatment, centrifugation, and incineration using a fluidized bed reactor.

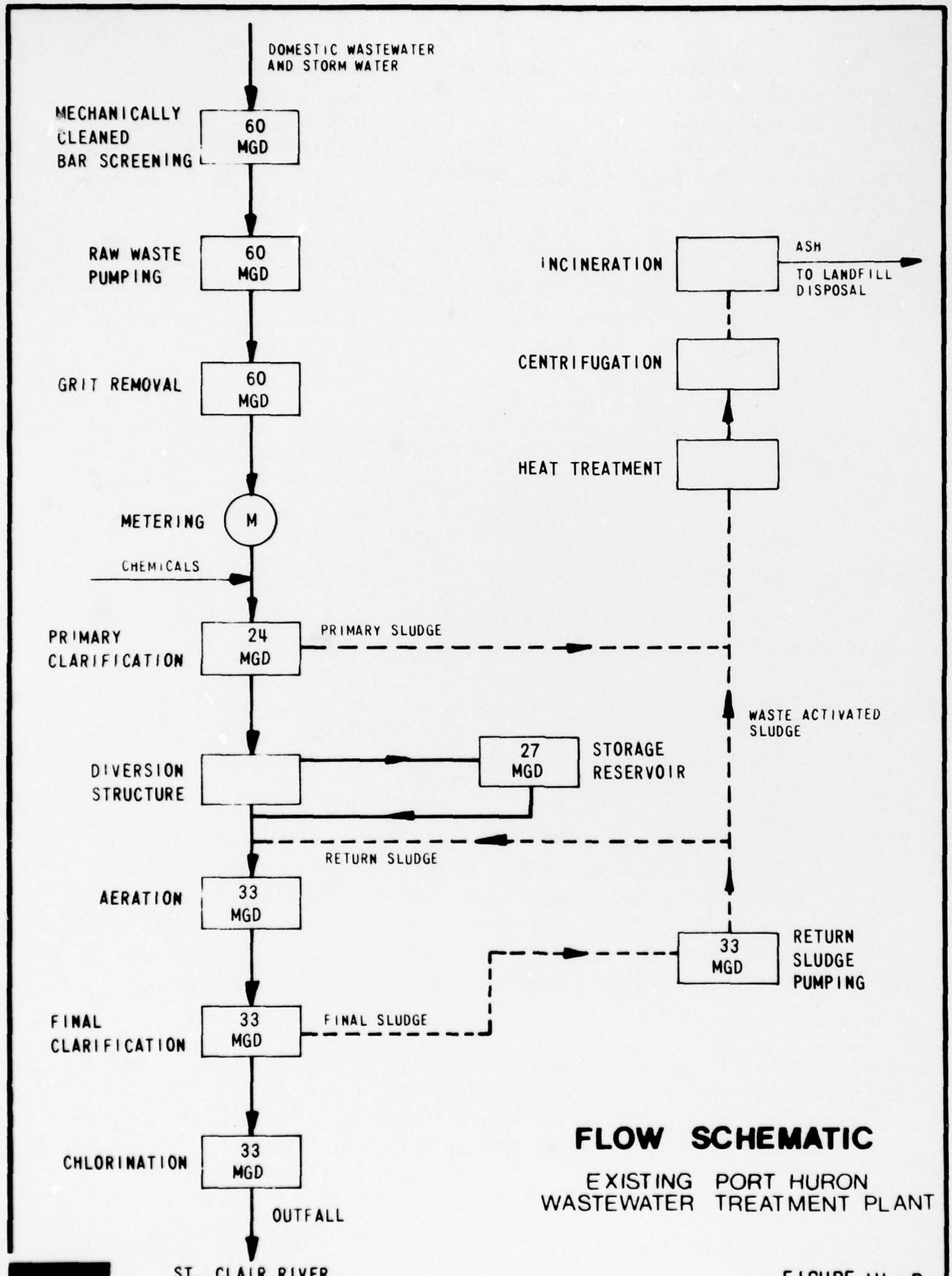

FLOW SCHEMATIC

EXISTING PORT HURON
WASTEWATER TREATMENT PLANT

FIGURE III - 3

STANLEY CONSULTANTS

INTERNATIONAL CONSULTANTS IN ENGINEERING, ARCHITECTURE, PLANNING AND MANAGEMENT

Wyandotte Wastewater Treatment Plant The existing Wyandotte Treatment Plant provides primary treatment and chlorination. The existing treatment plant was enlarged during 1971 and is presently designed for an average flow of 100 mgd with a maximum hydraulic capacity of 200 mgd. Expansion in the near future will add secondary treatment along with 80 percent phosphate removal. A schematic flow diagram of the facility is shown in Figure III-4.

Bar screens and raw waste pumping provide a firm capacity of 200 mgd. The screenings can be ground and returned to the wastewater flow or hauled to a landfill for disposal. Grit is removed in two detritor grit chambers and two aerated units. Each unit is rated at 50 mgd.

Primary sedimentation is accomplished in six rectangular settling tanks. Each tank is 80 feet wide, 146 feet long, and 12 feet deep for a total volume of 6.3 million gallons and a surface area of 70,000 square feet. This provides an overflow rate of 1,430 gallons per square foot per day at the average flow rate of 100 mgd. Primary effluent presently flows into a chlorine contact chamber with a total volume of 1.43 million gallons. This provides a 15 minute contact time for a flow of 137 mgd. The existing plant also has an incinerator with a capacity of 215 tons/day.

Proposed treatment facilities have been designed to treat primary effluent that has been chemically treated with iron, lime, and polymer for phosphorous removal.

A low lift pumping station will be added to lift the wastewater to the secondary portion of the plant. Two fixed speed pumps rated at 50 mgd each and two variable speed pumps rated at 50 mgd each will provide a firm pumping capacity of 150 mgd.

Secondary treatment will be accomplished with a pure oxygen activated sludge process. The aeration tank is designed for an average flow of 100 mgd and is 25 feet deep x 180 feet long x 180 feet wide, divided into four compartments. The tank is designed for a volumetric loading of 102 pounds of BOD per 1,000 cubic feet per day. The oxygen plant is designed to produce 40 tons of oxygen per day.

Four final clarifiers, each 163 feet in diameter, with a side water depth of 13.4 feet, and a total surface area of 83,200 square feet are designed for a detention time of 2 hours and an overflow rate of 1,200 gallons per square foot per day. Return sludge pumping is accomplished by four variable speed pumps rated at 15 mgd each. Waste activated sludge will be pumped into sludge thickening tanks designed to handle 75,000 pounds of sludge per day.

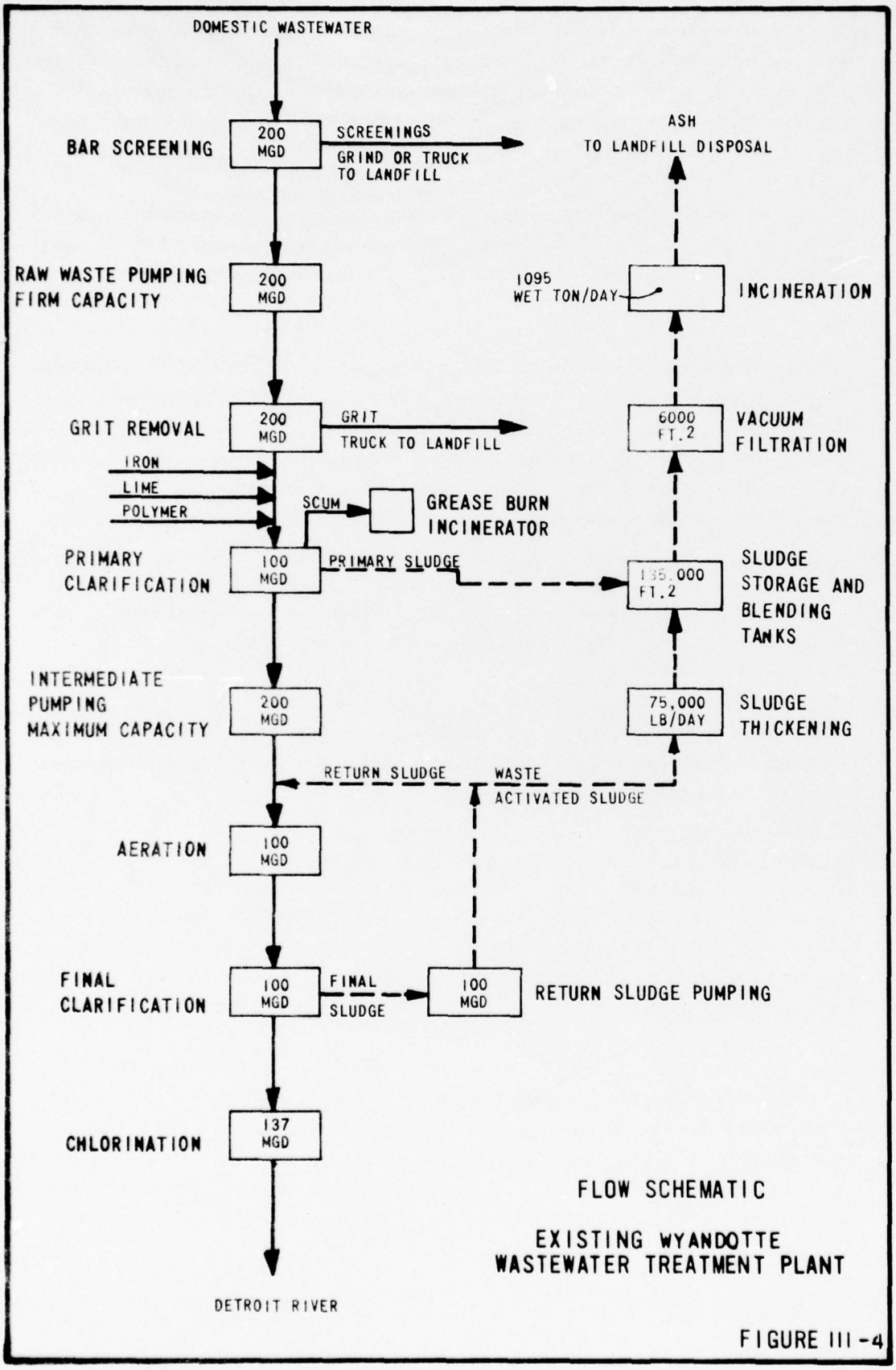

FLOW SCHEMATIC

EXISTING WYANDOTTE
WASTEWATER TREATMENT PLANT

FIGURE III-4

Primary sludge is presently pumped to two 40 foot diamter x 25.5 foot deep sludge storage tanks with a total volume of 54,000 cubic feet. Three additional sludge storage tanks will be constructed to bring the total sludge storage volume to 135,000 cubic feet. The thickened waste activated sludge and the primary sludge will be blended prior to vacuum filtration.

Eight new vacuum filters will be installed with a total surface area of 6,000 square feet. The filter cake will be incinerated with the ash hauled to landfill disposal. Four new incinerators, rated at 220 tons each, will be installed. With the existing incinerator kept as a standby unit, the total incinerator capacity will be 1,095 wet tons per day.

Algonac Wastewater Treatment Plant The Algonac plant is located along River Road in Algonac. This primary treatment plant serves a population of 4,000 and has a present average wastewater flow of 0.3 mgd. The design flow of the plant is 3 mgd and is sanitary sewage in nature since the sewer system does not have combined sewer interceptors and has minimum infiltration. A flow diagram is shown in figure III-5.

Raw wastewater entering the plant passes through a comminutor and is then lifted to an enclosed grit chamber by three constant speed pumps rated at 0.2, 0.3 and 0.7 mgd. Room is provided in the dry well for a fourth pump when needed. The grit removal facility is a rectangular aerated "Degritter" by Walker Process. Grit removed averages about 4 cu. ft./million gallons.

From the grit chamber, the wastewater flows to three rectangular settling tanks, 18 feet wide by 60 feet long, with an average depth of 14 feet. Presently, only one settling tank is being used. A second settling tank is being used as a chlorine contact chamber. Biochemical Oxygen Demand and Total Suspended Solid removals average about 45 percent and 75 percent respectively in primary settling.

Pre-chlorination and post-chlorination is provided using a solution feed chlorinator with facilities provided for one ton chlorine cylinders. The chlorinated effluent is pumped to the St. Clair River for discharge by two 3,000 gpm pumps at a distance of about 0.6 miles. The discharge point is located in deep water on the river bottom.

Primary sludge is dewatered on a 150 square foot vacuum filter. Equipment is provided for ferric chloride and lime addition, but presently only a polymer is used for sludge conditioning. Two aerated 40,000 gallong sludge holding tanks currently store the sludge since the dewatering and ultimate disposal process occurs only twice a month.

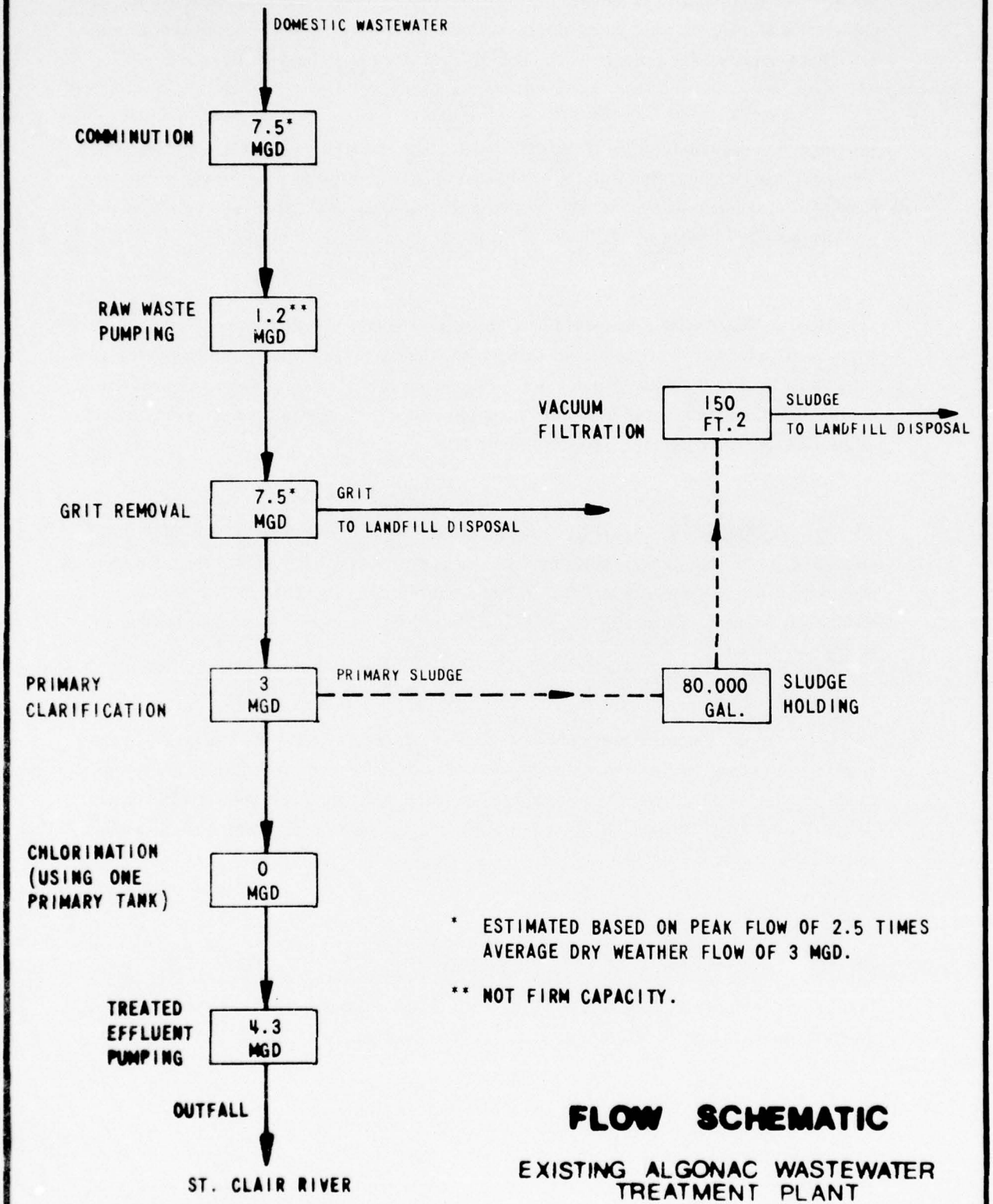

* ESTIMATED BASED ON PEAK FLOW OF 2.5 TIMES AVERAGE DRY WEATHER FLOW OF 3 MGD.

** NOT FIRM CAPACITY.

FLOW SCHEMATIC

EXISTING ALGONAC WASTEWATER TREATMENT PLANT

FIGURE III - 5

STANLEY CONSULTANTS

INTERNATIONAL CONSULTANTS IN ENGINEERING, ARCHITECTURE, PLANNING, AND MANAGEMENT

The treatment plant has a well equipped laboratory for wastewater analysis. An automatic sampler is used to take 24-hour composite samples of both the influent and effluent.

East China Township Wastewater Treatment Plant The existing plant is currently being expanded. A flow schematic for the proposed expansion is shown on Figure III-6.

Raw waste is pumped at a maximum rate of 1.25 mgd to an aerated grit chamber with waste flowing through a comminutor.

Primary clarification is provided with the primary sludge being processed by anaerobic digestion and dewatering on sludge drying beds prior to ultimate landfill disposal. Effluent from the priary clarifier flows to two package contact stabilization plants rated at 0.5 mgd. The package plant includes contact, reaeration, clarification, aerobic digestion, and chlorine contact zones. The waste activated sludge is directed to the same sludge beds as the primary sludge for dewatering and ultimate disposal.

Methodology for Developing Technological Alternatives

The procedure for the development of technological alternatives for managing wastewater in Southeastern Michigan consisted of the investigation of a multitude of wastewater systems, all their components, and their cost effectiveness as they would contribute to system design. This procedure provided for the development, modification, and refinement of alternatives and took place in three distinct phases:

(1) Initial investigation and formation of original alternatives.

(2) Detailed investigation and formation of second stage alternatives.

(3) Formation of Representative Alternatives.

Initial Investigation - The initial investigations were undertaken to develop a base from which final systems could be formed. The technical capability of each system was to approach within engineering reason the 1985 "no discharge of pollutants" goal of Public Law 92-500. Three systems were developed, each based on the total use of one of three treatment approaches:

Detailed Investigation - The analysis and evaluation of the impacts of these plans resulted in the need for more detailed investigation in some areas. These included detailed cost estimates, land material, and power requirements, manpower needs, and operation and maintenance costs.

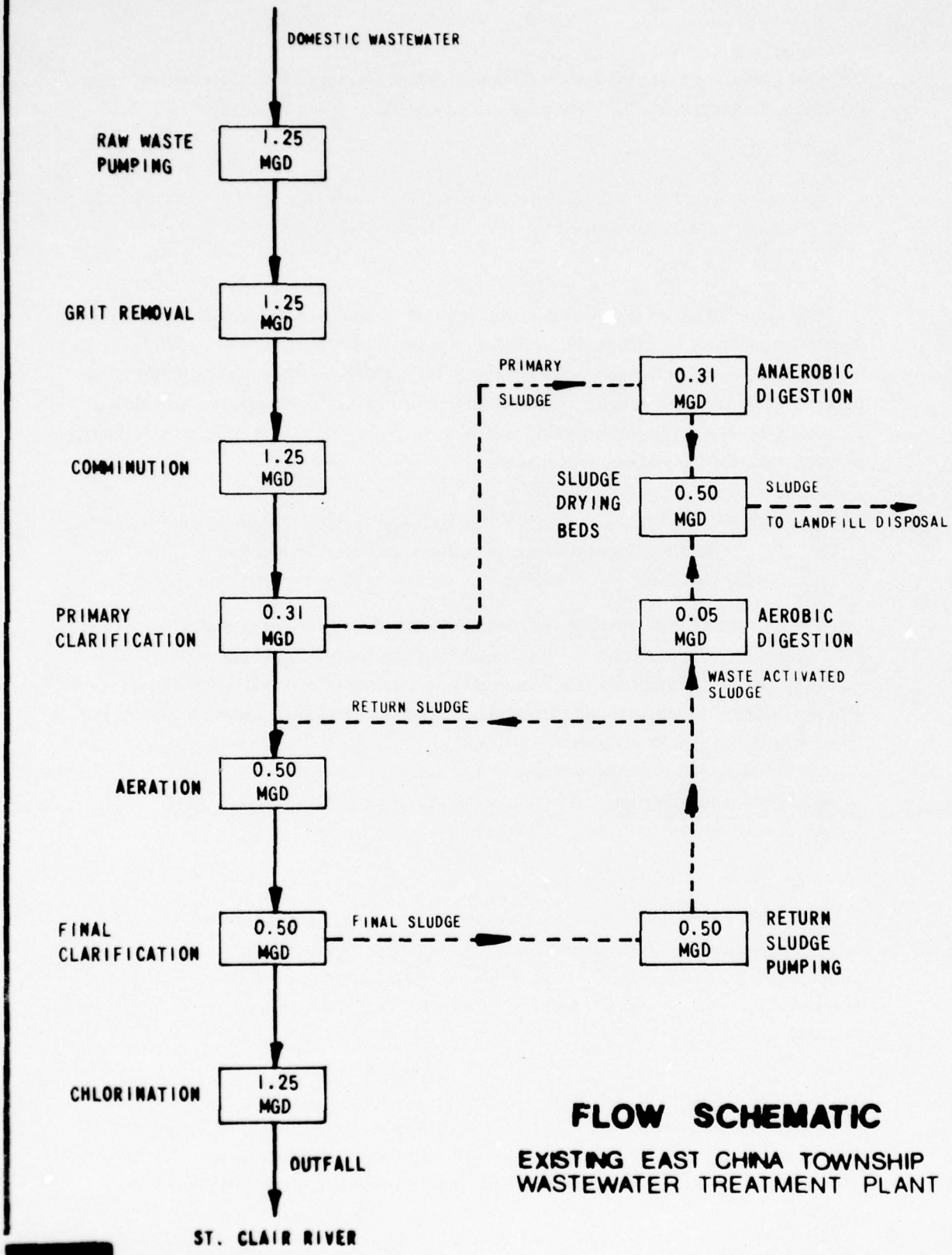

FLOW SCHEMATIC

EXISTING EAST CHINA TOWNSHIP
WASTEWATER TREATMENT PLANT

FIGURE III-6

From this additional information additional alternatives were formed. These second stage alternatives were formed from modifications or combinations of the original plans to enable them to fit a specific need or requirement and still meet a similar technical goal.

It is most probable that a combination of system components can be combined and modified to achieve a water quality technical goal in a more cost effective manner. For example, advanced wastewater treatment may be more suited to a certain area and land treatment to another. In combination, these may be less expensive than systems based entirely on one treatment approach. Other combination alternatives may be more favorable because they optimize regional planning objectives or are the most politically acceptable at state and local levels.

Formation of Representative Alternatives - After the second stage alternatives were developed and evaluated, three representative plans were formed by refining some of the more promising of these plans to improve their overall acceptability.

Cost Estimation Methodology and Criteria

The cost of systems and system components is an essential part of the evaluation of an engineering design. Estimated costs have been determined, therefore, for the alternatives investigated. Estimates have been based, whenever possible, on manufacturers quoted prices and critical bid prices. Other costs have been based on unit costs and cost curves developed by the Architect-Engineer for this and other projects. The estimated costs are adjusted to an ENR Constriction Cost Index for 1972 of 1,960, an EPA Sewage Treatment Plant index of 180.73, or an EPA Sewer Construction Cost Index of 200.77.

Cost estimates were broken down into capital costs, annual capital costs, annual operation and maintenance costs, annual replacement costs, and total average annual costs. Capital costs include construction, land acquisition, administration, engineering, and contingency costs. The annual capital costs are calcultated using capital recovery factors at interest rates of 5-1/2, 7 and 10%. Operation and maintenance costs include, power, labor, and material and supplies. Replacement costs are determined for those major equipment items that cannot be replaced by the nomal labor force during regular maintenance. The total average annual capital costs at 5-1/2, 7 and 10 percent interest are the sums of the annual replacement costs.

Throughout the cost estimation the following general bases were followed:

1. Costs are estimated in January 1972 dollars with no adjustment for future inflation.
2. The economic life of the facility is 50 years. Maintenance and replacement will continue throughout the 50 years to preserve utility. Salvage value after 50 years is considered nil.
3. No interest is charged during construction.
4. Base interest rate is 5-1/2 percent for sinking funds and capital recovery. Summary data are calculated at 7 percent and 10 percent to show interest effects.
5. The sinking fund factor is calculated according to paragraph 15, "ECONOMIC EFFECT," Computation of Financial Costs and Economic Costs, EM-1120-2-104, Manual - Corps of Engineers, 7 Nov. 1958.
6. Average Annual Costs equal the sum of the operation and maintenance costs, and the sinking fund for replacement equipment and capital recovery.

DEVELOPMENT OF ALTERNATIVE COMPONENTS

Collection and Conveyance

Systems of sewers collect and carry the waterborne wastes from industry, municipal and stormwater sources to treatment sites in a complex arrangement of underground transmission lines. These sewer systems are an integral and often the most expensive part of a total wastewater system and their importance cannot be taken lightly. The planning and design of regional collection systems and conveyance systems for Southeastern Michigan is presented in the following.

Existing Systems Historically, the citizens of Southeastern Michigan have supported a regional system of interceptor sewers and metropolitan wastewater treatment plants. Throughout the study area, municipalities have local sewerage systems, interceptors, and trunks or collectors. These sewerage facilities are advantageous to the development of a regional wastewater collection and transmission system, since the existing networks only have to be evaluated and augmented to meet the proposed treatment plant configurations.

The extent of the area currently sewered is shown in Figure IV-1. The map delineates, in a general manner, those areas within the study area that are sewered or will be sewered by the year 1980 and further to 1990. The 1980 area has been determined, to a large extent, on individual plans and commitments made by governmental agencies responsible for constructing and operating the necessary facilities. The 1990 area is based on projected land use, population, transportation, water supply and other elements of a comprehensive plan.

Those interceptors which form regional districts and will be in service in the year 1975 are shown in Figure IV-2. The most extensive regional district is the Detroit Metropolitan Water Department service area. As of 1970 this service area had in operation or under construction facilities representing 67 communities with a total population of approximately 3,500,000 people. The other regional interceptor network is the Downriver System which serves 13 communities and approximately 310,000 people. This facility is operated by Wayne County and flows to the Wyandotte Wastewater Treatment Plant.

Future Collection Facilities In order to meet the needs of a growing urban area, existing collection systems need to be expanded or new systems need to be created. Using the existing system as a base, additional collection systems have been designed to increase the service area of the Detroit system. The Downriver System has not been expanded due to constrictions on the size of the Wyandotte Treatment Plant. Completely new interceptor networks have been developed to form two new systems: The Huron River System, and the Adrian System. The three systems, their service areas, and their newly designed interceptors are shown in Figure IV-3, and are discussed below.

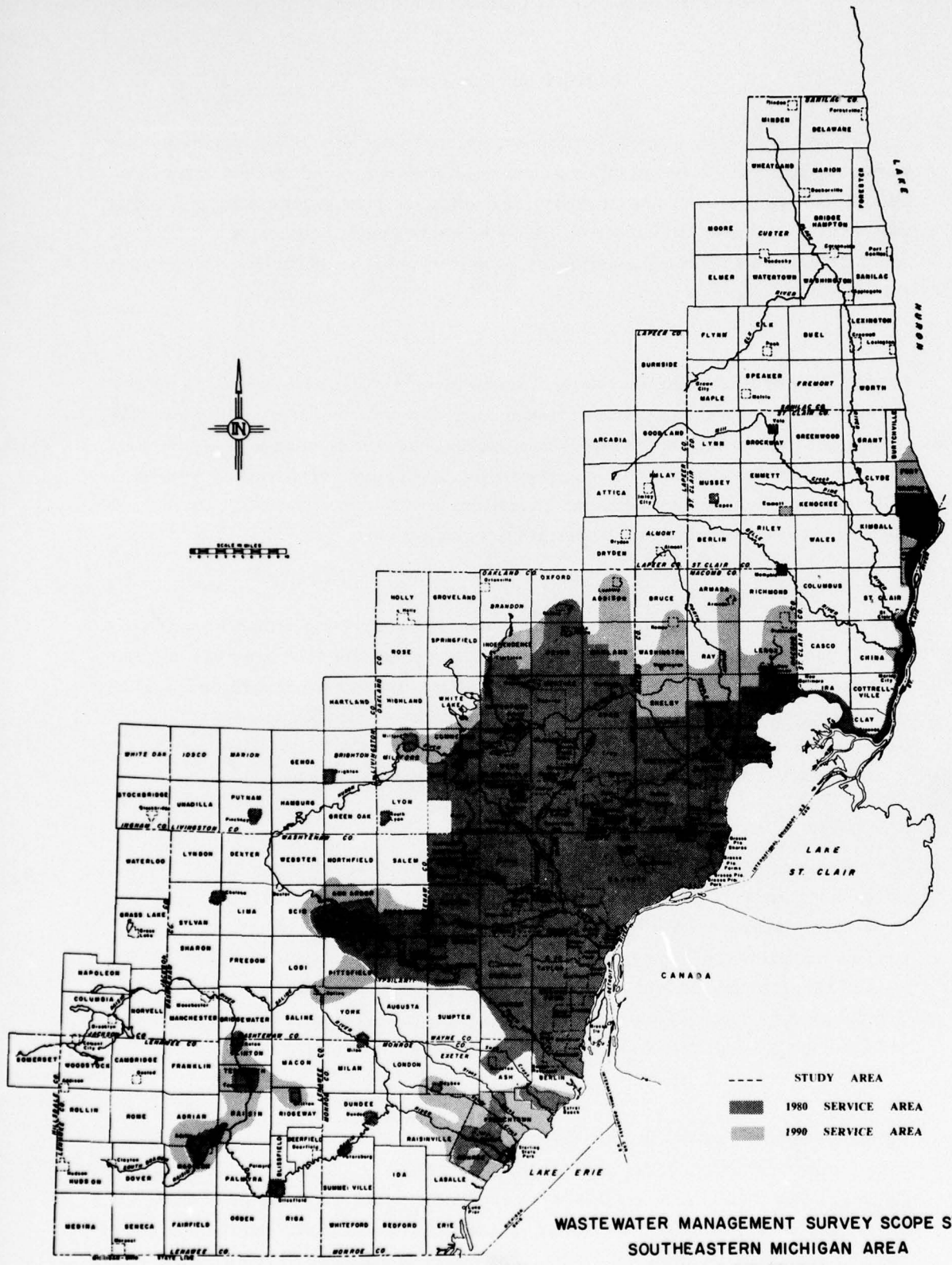

WASTEWATER MANAGEMENT SURVEY SCOPE STUDY
SOUTHEASTERN MICHIGAN AREA
FIGURE IV-1
SANITARY SEWER FACILITIES
U.S. ARMY ENGINEER DISTRICT, DETROIT

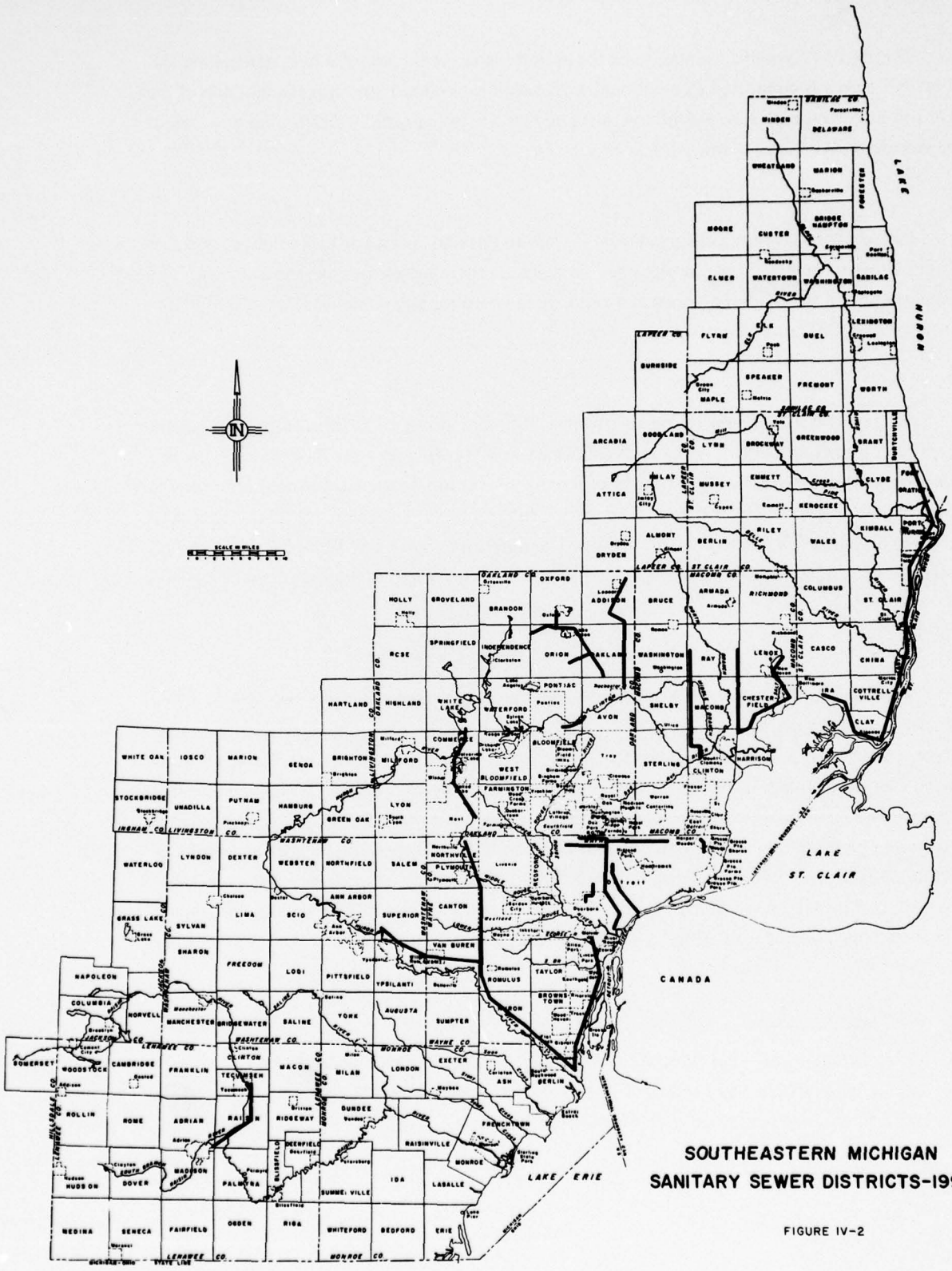

SOUTHEASTERN MICHIGAN
SANITARY SEWER DISTRICTS-1990

FIGURE IV-2

The Detroit System continues to be the largest system in the Southeastern Michigan area. The entire area is connected to a regional wastewater treatment plant near the junction of the Detroit and Rouge Rivers. Additions to the system are in the rapidly developing portions of Macomb and Oakland County north of Detroit.

Interceptors have been designed from Oxford to Lake Orion and on to Rochester, and also from Leonard to Rochester where they connect to the existing interceptor network. The construction of these interceptors will eleiminate the need for any wastewater treatment plants in northeast Oakland County.

Interceptors have been designed to serve southern portions of Macomb County and eliminate plants in Romeo, Armada, Richmond, New Haven, and New Baltimore. There are three new interceptor arms. One runs from Romeo to Clinton Township and connects with the existing interceptors network there. The second runs along the township line from Armada to the existing network in Harrison Township. The third interceptor arm flows from Richmond, to New Haven, on to New Baltimore, and then connects to the existing system at Harrison Township.

The Huron River System begins with an interceptor from the proposed Huron River Wastewater Treatment Plant at Lake Erie and extends northwesterly and parallel to the Huron River to Hannan Road. At Hannan Road the system breanches to the north and also to the west. The west branch is the Van Buren Arm which picks up the existing Ypsilanti Township Plant. The extension westerly beyond the Ypsilanti Township plant is known as the Ann Arbor Arms and picks up the City of Ypsilanti and the City of Ann Arbor plants and their connecting service areas. The north branch is the Hannah Road Arm which serves Canton, Plymouth, and Northville Townships in Wayne County. A further northerly extension into Oakland County, the North Arm, picks up Novi, Commerce, and a portion of Milford and White Lake Townships.

The Adrian System has two interceptors which serve the developed portion of Lenawee County around Adrian and Tecumseh. The north arm extends from the plant to Tecumseh. A second arm extends southwest along the Raisin River to Adrain.

SOUTHEASTERN MICHIGAN SANITARY SEWER DISTRICTS-1975

FIGURE IV-3

TABLE IV-1

COLLECTION SYSTEM DESIGN SUMMARY

System Name & Description	Type	Length in Miles	Diameter in Feet	Average Flow In MGD	Max Flow In MGD
Adrian System					
Adrian to Plant	Gravity	2.0	3.0	6.0	10.5
Tecumseh to Plant	Gravity	6.4	3.0	6.0	10.5
Huron River System					
North Arm	Gravity	18.0	6.0	62	134
Hannan Road Arm	Gravity	13.5	6.5	37	74
Ann Arbor Arm	Gravity	8.5	7.5	71	142
Van Buren Arm	Gravity	9.0	9.0	126	252
Huron Main	Gravity	15.3	9.0	150	300
Detroit System					
Oxford to Lake Orion	Gravity	2.0	3	INA	INA*
Lake Orion to Rochester	Gravity	10.0	4.5	INA	INA*
Leonard to Rochester	Gravity	13.0	4.5	INA	INA*
Romeo to 18 Mile	Gravity	14.0	4-8	INA	INA*
Armada to Hall Rd.	Gravity	14.0	4-8.5	INA	INA*
Richmond to New Haven	Gravity	5.0	4	INA	INA*
New Haven to New Baltimore	Gravity	5.0	5	INA	INA*
New Baltimore to Hall Rd.	Gravity	5.0	6-9	INA	INA*

*Information not available

Conveyance Systems

Conveyance systems are mechanisms which transport large quantities of water from one point to another. The systems may be in the form of open channels, gravity interceptors, force mains, or deep tunnels. The conveyance systems presented here have been developed to transport wastewater from equalization lagoons to land treatment sites, to convey renovated water from land treatment sites to discharge points, to convey treated water from lagoon treatment systems to isolated irrigation sites, and to transport raw wastewater from significant collection points to treatment plants or lagoon treatment sites.

The average daily flow for each of the conveyance systems was developed from the wastewater projections for the study areas. To obtain a peak daily flow upon which municipal-industrial and combined wastewater conveyance systems were sized, the average daily flow for the system was multiplied by a peaking factor of 1.75. Each system conveying only treated water was analyzed individually and designed for the maximum flow expected.

An equalized stormwater flow is included in the total flow for the two conveyance systems from the equalization lagoons to the land treatment sites. The storage volume, pump out rates, and service area for the equilization lagoons were developed through the analysis as explained in the stormwater portion of this appendix.

Deep or mole type tunnels designed for gravity flow are a unique but excellent solution to major conveyance problems. Wastewater enters the tunnel through a vertical drop shaft and flows to its destination where it is pumped back to the surface.

The conveyance tunnels are designed with a circular cross-section and, by placement in the proper type of rock strata, the tunnels are smooth enough for use without an additional concrete lining. To insure that the proper rock strata is present, geological formations were plotted to assist in the vertical positioning of the tunnels.

Because of the smooth tunnel walls produced by the mole boring machine, these tunnels are sized using a value of $n = 0.017$ in Manning's formula. To insure that solids will not settle out during transmission, a minimum velocity of 2.0 feet per second is maintained at all times within the systems.

Open channels are used for conveyance of renovated wastewater only, and are designed with trapezoidal cross-sections. They operate by gravity and are designed for a maximum velocity of 2.5 feet per second as a safegruard against channel erosion. Velocity control sections are used when velocities in the channels cannot be controlled by the channel slope alone. Channel linings are not included in the designs as groundwater contamination is not a concern when water of such high quality is being transported.

Gravity interceptors have sufficient size and slope to maintain a minimum velocity of 2.0 feet per second at average daily flow and a minimum velocity of 1.5 feet per second at a minimum daily flow assumed to 0.75 of the average daily flow. Reinforced concrete pipe with a circular cross-section is used in all gravity systems, and all interceptors are sized using a $n = 0.015$ in Manning's formula. The final design of each interceptor takes into account the existing ground profile. It is based on excavation not exceeding a 20 foot depth unless it is economically beneficial to do so, and it minimizes the number of lift stations required for each system by varying the size and slope of each line to fit the topography.

Force main systems have sufficient diameter to maintain a minimum velocity of 5 feet per second at average daily flow. No peaking factor is used in these designs as all force mains convey treated water to irrigation sites. The force mains all have circular cross-sections and are sized using a $C = 100$ in the Hazen-Williams formula. Pump station capacity and power requirements are based on the average daily flow and the head required to lift the water to the irrigation site elevation and to compensate for the head losses developed within the line during transmission. All force mains follow the existing ground profile with a minimum of 5 feet of cover.

Bauer Engineering Inc. did the initial conveyance system design work for the study. In the listings of all of the conveyance systems designed for use in this study, Table IV-2, those designed by Bauer Engineering are so noted. The remaining systems listed were designed by members of the Detroit District staff using the procedures outlined in the appendix of the report entitled "Lagoon Treatment and Conveyance Systems, Southeastern Michigan Wastewater Management" prepared by Bauer Engineering as a technical document for this study.

Table IV-2
CONVEYANCE SYSTEM DESIGN SUMMARY

Raw Wastewater to Treatment Plant Sites

SYSTEM 1 (Bauer Engineering - System A)

Route: Algonac to East China and St. Clair to East China

Description: Gravity interceptor designed to carry municipal-industrial wastewater generated in St. Clair Co. communities along the St. Clair River to a treatment plant at East China.

Length: 15.7 miles

Design Flow: 10.5 MGD

Average Flow: 6 MGD

Maximum Diameter: 3 feet

Number of Pump Stations: 6

SYSTEM 2 (Bauer Engineering - System B)

Route: Port Huron to East China

Description: Gravity interceptor designed to carry municipal-industrial wastewater generated in Port Huron and Marysville to a treatment plant at East China.

Length: 16.7 miles

Design Flow: 42 MGD

Average Flow: 24 MGD

Number of Pump Stations: 4

SYSTEM 3 (District Staff)

Route: Port Huron to East China

Description: Gravity interceptor designed to carry municipal-industrial wastewater generated in Port Huron, Marysville and St. Clair to a treatment plant at East China.

Length: 16.7 miles

Design Flow: 52.5 MGD

Average Flow: 30 MGD

Maximum Diameter: 6.5 feet

Number of Pump Stations: 3

SYSTEM 4 (District Staff)

Route: Marysville to Port Huron

Description: Gravity interceptor designed to carry municipal-industrial wastewater generated in Marysville to the Port Huron treatment plant site.

Length: 5.3 miles

Design Flow: 10.5 MGD

Average Flow: 6 MGD

Maximum Diameter: 4 feet

Number of Pump Stations: 2

SYSTEM 5 (District Staff)

Route: Algonac to East China

Description: Gravity interceptor designed to carry municipal-industrial wastewater from Algonac and communities along the route to a treatment plant at East China.

Length: 10.9 miles

Design Flow: 10.5 MGD

Average Flow: 6 MGD

Maximum Diameter: 3 feet

Number of Pump Stations: 4

SYSTEM 6 (Bauer Engineering - System L)

Route: Wyandotte to Huron River plant site

Description: Mole tunnel carrying municipal-industrial wastewater from the Wyandotte plant to the Huron River treatment plant site.

Length: 16.8 miles

Design Flow: 219 MGD

Average Flow: 125 MGD

Maximum Diameter: 10 feet

Number of Pump Stations: 1

SYSTEM 7 (District Staff)

Route: Melvindale to Wyandotte to Trenton to the Huron River plant site

Description: Mole tunnel carrying municipal-industrial wastewater from the Rouge Valley System, the Downriver System, the Trenton Service Area and other areas along the route to the Huron River plant site.

Length: 20.8 miles

Design Flow: 655 MGD

Average Flow: 375 MGD

Maximum Diameter: 10 feet

Number of Pump Stations: 1

SYSTEM 8 (District Staff)

Route: Melvindale to Huron River plant site

Description: Mole tunnel carrying municipal-industrial wastewater from the Rouge Valley System, the Downriver Area and Trenton to the Huron River site.

Length: 20.8 miles

Design Flow: 440 MGD

Average Flow: 250 MGD

Maximum Diameter: 10 feet

Number of Pump Stations: 1

SYSTEM 9 (District Staff)

Rouge: Detroit - Wyandotte to Huron River

Description: Mole tunnel carrying municipal-industrial wastewater from the Detroit Service Area to the Huron River plant site.

Length: 24.6 miles

Design Flow: 1,770 MGD

Average Flow: 1,181 MGD

Maximum Diameter: 23 feet

Number of Pump Stations: 1

SYSTEM 10 (Bauer Engineering - System D)

Route: City of Monroe to Huron River Plant Site

Description: Gravity interceptor carrying municipal-industrial wastewater from the City of Monroe to the Huron River plant site.

Length: 11.1 Miles

Design Flow: 70 MGD

Average Flow: 40 MGD

Maximum Diameter: 7.5 feet

Number of Pump Stations: 4

SYSTEM 11 (Bauer Engineering - System C)

Route: Detroit to Huron River Plant Site

Description: Mole tunnel carrying municipal-industrial wastewater from the Detroit Service Area to the Huron River plant site.

Length: 24.6 miles

Design Flow: 1,410 MGD

Average Flow: 806 MGD

Maximum Diameter: 20 feet

Number of Pump Stations: 1

Raw Wastewater to Lagoon Treatment Systems

SYSTEM 12 (Bauer Engineering - St. Clair Conveyance System)

Route: Macomb Co. Stormwater Lagoons to the St. Clair - Saginaw Co. Treatment Lagoon System

Description: Gravity flow mole tunnel designed to carry both municipal-industrial wastewater and urban storm runoff from the regional stormwater storage lagoon site to the wastewater treatment lagoon site in St. Clair and Sanilac Counties

Length: 25.3 miles

Design Flow: 3,033 MGD

Average Flow: 2,185 MGD

Maximum Diameter: 23 feet

Number of Pump Stations: 1

SYSTEM 13 (District Staff)

Route: Macomb Co. Stormwater Lagoons to the St. Clair - Sanilac Co. treatment lagoon system

Description: Gravity flow mole tunnel designed to carry both municipal-industrial wastewater and urban storm runoff from the regional stormwater storage lagoon site to the wastewater treatment lagoon system in St. Clair and Sanilac Counties

Length: 25.3 miles

Design Flow: 3,884 MGD

Average Flow: 1,744 MGD

Maximum Diameter: 26 feet

Number of Pump Stations: 1

SYSTEM 14 (Bauer Engineering - System F)

Route: Red Run Area (Macomb Co.) to St. Clair - Sanilac Co. Lagoon Site

Description: Gravity interceptor system in Warren - Red Run area to a gravity mole tunnel which leads to the St. Clair - Sanilac Co. lagoon system

Length: 24.3 miles

Design Flow: 1,050 MGD

Average Flow: 600 MGD

Maximum Diameter: 18.0 feet

Number of Pump Stations: 1

SYSTEM 15 (District Staff)

Route: Warren-Macomb Co. Area to St. Clair Co. lagoon site

Description: Force main to carry municipal-industrial wastewater from the Warren plant and the Oakland-Macomb interceptor system to the treatment lagoon site in St. Clair County.

Length: 36.8 miles

Design Flow: 306 MGD

Average Flow: 175 MGD

Maximum Diameter: 11 feet

Number of Pump Stations: 1

SYSTEM 16 (District Staff)

Route: Wyandotte to Detroit to St. Clair-Sanilac Co. lagoon system

Description: Mole tunnel designed to carry municipal-industrial wastewater from the present treatment plants at Wyandotte and Detroit to the lagoon treatment site in St. Clair County.

Length: 64.8 miles

Design Flow: 1,400 MGD

Average Flow: 1,103 MGD

Maximum Diameter: 23 feet

Number of Pump Stations: 1

SYSTEM 17 (Bauer Engineering - System E)

Route: Port Huron to Algonac to Macomb Co. stormwater lagoons

Description: Gravity interceptor designed to carry municipal-industrial wastewater from eastern St. Clair Co. to the regional stormwater lagoon for conveyance to the St. Clair Co. lagoon system

Length: 46.2 miles

Design Flow: 70 MGD

Average Flow: 40 MGD

Maximum Diameter: 8 feet

Number of Pump Stations: 8

SYSTEM 18 (District Staff)

Route: Port Huron to Algonac to Macomb Co. stormwater lagoons

Description: Gravity interceptor designed to carry both municipal-industrial wastewater and urban storm runoff from eastern St. Clair Co. to the regional stormwater lagoon for conveyance to the St. Clair Co. treatment lagoon system.

Length: 45.8 miles

Design Flow: 158 MGD

Average Flow: 71 MGD

Maximum Diameter: 11 feet

Number of Pump Stations: 8

SYSTEM 19 (District Staff)

Route: Algonac and Port Huron to St. Clair to St. Clair Co. Lagoon Site

Description: Gravity interceptor designed to carry municipal-industrial wastewater from Algonac and Port Huron to St. Clair and both municipal-industrial wastewater and storm runoff from St. Clair to the St. Clair Co. treatment lagoons

Length: 54.9 miles

Design Flow: 188 MGD

Average Flow: 71 MGD

Maximum Diameter: 9 feet

Number of Pump Stations: 22

SYSTEM 20 (District Staff)

Route: Algonac to St. Clair to St. Clair Co. Lagoon Site

Description: Gravity interceptor designed to carry municipal-industrial wastewater from Algonac to St. Clair and both municipal-industrial wastewater and storm runoff from St. Clair to the St. Clair Co. treatment lagoons

Length: 43.6 miles

Design Flow: 146 MGD

Average Flow: 47 MGD

Maximum Diameter: 8 Feet

Number of Pump Stations: 19

SYSTEM 21 (Bauer Engineering - System G)

Route: Algonac to St. Clair to Wales Twp. Lagoon Site

Description: Gravity interceptor designed to carry municipal-industrial wastewater from Algonac to St. Clair to the lagoon treatment in Wales Township

Length: 27.6 miles

Design Flow: 10.5 MGD

Average Flow: 6 MGD

Maximum Diameter: 3.0 feet

Number of Pump Stations: 13

SYSTEM 22 (District Staff)

Route: Algonac to St. Clair to Wales Twp. Lagoon Site

Description: Gravity interceptor designed to carry municipal-industrial wastewater from Algonac to St. Clair to the lagoon treatment site in Wales Township.

Length: 28.2 miles

Design Flow: 146 MGD

Average Flow: 47 MGD

Maximum Diameter: 8 feet

Number of Pump Stations: 13

SYSTEM 23 (Bauer Engineering - Monroe Conveyance System)

Route: Regional stormwater lagoon (Huron River) to Monroe Co. Lagoon Site

Description: Gravity mole tunnel designed to carry both municipal-industrial wastewater and storm runoff from the vicinity of the mouth of the Huron River to the treatment lagoon site in Monroe County.

Length: 23.6 miles

Design Flow: 1,615 MGD

Average Flow: 1,375 MGD

Maximum Diameter: 18 feet

Number of Pump Stations: 1

SYSTEM 24 (District Staff)

Route: Regional stormwater lagoon (Huron River) to Monroe Co. Lagoon Site

Description: Force main designed to carry municipal-industrial wastewater from the Huron River and Lower Detroit River interceptor system and the City of Monroe to the Monroe County treatment lagoon site.

Length: 23.6 miles

Design Flow: 400 MGD

Maximum Diameter: 10 feet

Number of Pump Stations: 1

SYSTEM 25 (District Staff)

Route: Regional stormwater lagoon (Huron River) to Monroe Co. Lagoon Site

Description: Force main designed to carry municipal-industrial wastewater from the Huron River and Lower Detroit River interceptor systems to the Monroe Co. treatment lagoon site.

Length: 23.6 miles

Design Flow: 388 MGD

Average Flow: 225 MGD

Maximum Diameter: 9.5 feet

Number of Pump Stations: 1

SYSTEM 26 (Bauer Engineering - System M)

Route: Detroit to Monroe Co. Lagoon System

Description: Gravity mole tunnel designed to carry municipal-industrial wastewater from the Detroit treatment plant site to the Monroe Co. lagoon system

Length: 48.3 miles

Design Flow: 1,630 MGD

Average Flow: 930 MGD

Maximum Diameter: 22 feet

Number of Pump Stations: 1

SYSTEM 27 (District Staff)

Route: Lenawee Co. interceptor to treatment lagoon site

Description: Force main from the termination of the Lenawee Co. interceptor system to the Lenawee Co. treatment lagoon site

Length: 2.7 miles

Design Flow: 22.5 MGD

Average Flow: 14.9 MGD

Maximum Diameter: 3.0 feet

Number of Pump Stations: 1

Treated Wastewater from Treatment Lagoons to Irrigation Sites

SYSTEM 28 (District Staff)

Route: St. Clair-Sanilac Lagoon System to St. Clair-Sanilac Irrigation Site

Description: Force mains distributing treated wastewater to the three distribution points in the St. Clair-Sanilac Irrigation Site

Length: 25 Miles

Design Flow: 1,776 MGD

Average Flow: 1,184 MGD

Maximum Diameter: 14 feet

Number of Pump Stations: 2

SYSTEM 29 (District Staff)

Route: St. Clair Lagoon to St. Clair Irrigation Site

Description: Force main carrying treated wastewater to the central area of the St. Clair-Sanilac Co. irrigation site only.

Length: 5 Miles

Design Flow: 691 MGD

Average Flow: 386 MGD

Maximum Diameter: 12 feet

Number of Pump Stations: 1

SYSTEM 30 (Bauer Engineering - System K)

Route: St. Clair-Sanilac Lagoons to Huron-Tuscola Irrigation

Description: Force main from the St. Clair-Sanilac County lagoon system to the four distribtuion points in the Huron-Tuscola County Irrigation Site

Length: 98.3 Miles

Design Flow: 1,100 MGD

Average Flow: 1,100 MGD

Maximum Diameter: 16 Feet

Number of Pump Stations:

SYSTEM 31 (District Staff)

Route: St. Clair-Sanilac Lagoons to Huron-Tuscola Irrigation

Description: Gravity tunnel and force main system for transport of treated wastewater from the St. Clair-Sanilac Co. lagoon system to the four distribution points at the Huron-Tuscola Co. Irrigation Site

Length: 98.3 Miles

Design Flow: 4,716 MGD

Average Flow: 3,144 MGD

Maximum Diameter: 25 feet

Number of Pump Stations: 5

SYSTEM 32 (District Staff)

Route: St. Clair-Sanilac lagoons to Huron Co. Land Site

Description: Force main from St. Clair-Sanilac Co. Lagoon System to the distribution point in Eastern Huron County

Length: 56.6 Miles

Design Flow: 1,398 MGD

Average Flow: 857 MGD

Maximum Diameter: Parallel 13 feet

Number of Pump Stations: 1

SYSTEM 33 (Bauer Engineering - System H)

Route: Monroe Co. Lagoons to Fulton-Williams Irrigation Site

Description: Force main to convey treated wastewater from the treatment and storage lagoon site to the irrigation site in Fulton and Williams Counties in Ohio

Length: 73.3 Miles

Design Flow: 860 MGD

Average Flow: 860 MGD

Maximum Diameter: 15 feet

Number of Pump Stations: 1

SYSTEM 34 (Bauer Engineering - System J)

Route: Monroe Co. Lagoons to Lenawee Co. Irrigation Site

Description: Force main to convey treated wastewater from the treatment and storage lagoon site to the Lenawee Co. irrigation site.

Length: 12.1 Miles

Design Flow: 100 MGD

Average Flow: 100 MGD

Maximum Diameter: 8

Number of Pump Stations: 1

SYSTEM 35 (District Staff)

Route: Monroe Co. Lagoons to Lenawee Co. Irrigation Site

Description: Force main to convey treated wastewater from the Monroe Co. treatment and storage lagoon site to the Lenawee Co. irrigation site

Length: 15.1 Miles

Design Flow: 193 MGD

Average Flow: 124 MGD

Maximum Diameter: 7 feet

Number of Pump Stations: 1

SYSTEM 36 (District Staff)

Route: Monroe Co. Lagoons to Lenawee Co. Irrigation Site

Description: Force main to convey treated wastewater from the treatment and storage lagoon site in Monroe Co. to the Lenawee Co. irrigation site.

Length: 15.1 Miles

Design Flow: 63 MGD

Average Flow: 42 MGD

Maximum Diameter: 4.5 feet

Number of Pump Stations: 1

SYSTEM 37 (Bauer Engineering - System I)

Route: Lenawee Co. Lagoon Site to Lenawee Co. Land Site

Description: Gravity and Force Main from the juncture of the Raisin River to the Lenawee Co. irrigation site

Length: 9.4 miles

Design Flow: 21 MGD

Average Flow: 12 MGD

Maximum Diameter: 4.5 feet

Number of Pump Stations: 4

SYSTEM 38 (District Staff)

Route: Lenawee Co. Lagoons to Lenawee Co. Land Site

Description: Force main from lagoon just north of Lenawee Co. land site to southern part of land site.

Length: 5.8 Miles

Design Flow: 75 MGD

Average Flow: 50 MGD

Maximum Diameter: 4.5 feet

Number of Pump Stations: 1

Return of Renovated Water from Irrigation Sites to Major Waterways

SYSTEM 39 (Bauer Engineering - St. Clair Renovated Water System)

Route: St. Clair Co. Irrigation Site to St. Clair River

Description: Open channel from irrigation sites to a mole tunnel which would carry the renovated water to the St. Clair River.

Length: 26.3 Miles

Design Flow: 2,148 MGD

Average Flow: 2,148 MGD

Maximum Diameter: 20 feet

Number of Pump Stations: 0

SYSTEM 40 (District Staff)

Route: St. Clair-Sanilac Northern Irrigation Site to Lake Huron

Description: Gravity and force main carrying renovated wastewater from the northern section of the St. Clair-Sanilac Co. Irrigation Site to the Huron River.

Length: 15.0 Miles

Design Flow: 646 MGD

Average Flow: 387 MGD

Maximum Diameter: 13 feet

Number of Pump Stations: 1

SYSTEM 41 (District Staff)

Route: Southern and Central St. Clair Co. Irrigation Sites to St. Clair River

Description: Gravity interceptors convey renovated to a tunnel which leads to the St. Clair River.

Length: 45.4 Miles

Design Flow: 964 MGD

Average Flow: 643 MGD

Maximum Diameter: 30 feet

Number of Pump Stations: 0

SYSTEM 42 (District Staff)

Route: St. Clair Co. Irrigation to St. Clair Irrigation

Description: Gravity interceptor from St. Clair Co. (central) Irrigation area to the St. Clair River.

Length: 26.5 Miles

Design Flow: 691 MGD

Average Flow: 460 MGD

Maximum Diameter: 9.5 feet

Number of Pump Stations: 0

SYSTEM 43 (District Staff)

Route: Wales Township Irrigation Site to St. Clair River

Description: Gravity Interceptor from the irrigation site in Wales Township, St. Clair Co. to the St. Clair River

Length: 12.6 miles

Design Flow: 235 MGD

Average Flow: 157 MGD

Maximum Diameter: 9 feet

Number of Pump Stations: 0

SYSTEM 44 (District Staff)

Route: St. Clair Co. Irrigation to St. Clair River

Description: Gravity interceptor from the St. Clair Co. irrigation area (private ownership and control) to the St. Clair River.

Length: 26.5 Miles

Design Flow: 235 MGD

Average Flow: 157 MGD

Maximum Diamter: 9.5 feet

Number of Pump Stations: 0

SYSTEM 45 (Bauer Engineering - Monroe Renovated Water System)

Route: Monroe Irrigation site to Lake Erie

Description: Gravity tunnel from the Petersburg area to Lake Erie

Length: 10.6 Miles

Design Flow: 665 MGD

Average Flow: 665 MGD

Maximum Diameter: 15 feet

Number of Pump Stations: 0

SYSTEM 46 (District Staff)

Route: North Monroe Co. Irrigation to Lake Erie

Description: Gravity interceptor from the Carleton Area to Lake Erie

Length: 11.2 Miles

Design Flow: 256 MGD

Average Flow: 170 MGD

Maximum Diamter: 12 feet

Number of Pump Stations: 0

SYSTEM 47 (District Staff)

Route: Lenawee Co. Irrigation to Monroe Co. Irrigation to Lake Erie

Description: Gravity interceptor from the Lenawee Co. irrigation area to Petersburg in Monroe Co. to Lake Erie.

Length: 39.4 Miles

Design Flow: 518 MGD

Average Flow: 345 MGD

Maximum Diamter: 12 feet

Number of Pump Stations: 0

SYSTEM 48 (District Staff)

Route: Lenawee Co. Irrigation to Monroe Co. Irrigation to Lake Erie

Description: Gravity interceptor from Lenawee Co. Irrigation area to Petersburg in Monroe Co. to Lake Erie

Length: 25.5 Miles

Design Flow: 404 MGD

Average Flow: 269 MGD

Maximum Diameter: 12 feet

Number of Pump Stations: 0

TABLE IV-3

COLLECTION SYSTEM COST SUMMARY

Based in an Interest Rate of 5-1/2%

System Name & Description	Construction Cost Million Dollars	Amortized Construction Cost Thousand Dollars	Annual Operation and Maintenance Thousand Dollars	Total Annual Treatment Cost Thousand Dollars
Adrian System				
Adrian to Plant	1.046	61.8	5.7	67.5
Tecumseh to Plant	2.456	145.1	11.4	156.5
TOTALS	3.502	206.9	17.1	224.0
Huron River System				
North Arm	20.490	1210.2	--	1210.2
Hannon Road Arm	21.980	1298.2	--	1298.2
Ann Arbor Arm	14.350	847.5	--	847.5
Van Buren Arm	23.660	1406.8	--	1406.8
Huron Main	37.546	2217.7	--	2217.7
TOTALS	118.026	6980.4	--	6980.4
Detroit System				
Oxford to Lake Orion	.726	42.9	--	42.9
Lake Orion to Rochester	5.214	307.9	--	307.9
Leonard to Rochester	5.772	340.9	--	340.9
Romeo to 18-Mile	9.775	577.3	--	577.3
Armada to Hall Rd.	8.737	516.2	--	516.2
Richmond to New Haven	2.267	133.9	--	133.9
New Haven to New Baltimore	2.954	174.5	--	174.5
New Baltimore to Hall Rd.	7.077	418.0	--	418.0
TOTALS	42.522	2511.6	--	2511.6

Cost Estimates

The cost of the major components of each system and total system costs for collection systems and conveyance systems are presented in Table IV-3 and IV-4. The costs are based upon the prevailing prices on January 1, 1972. Some construction costs are based upon bids received for a land wastewater treatment system at Muskegon, Michigan in May, 1971. Other costs are developed from the Cost Data Annex to the Technical Appendix for the Regional Wastewater Management System for the Chicago Metropolitan Area, prepared for the U. S. Army Corps of Engineers - Chicago District. Unit cost data can be found in the *Lagoon Treatment and Conveyance Systems* report prepared by Bauer Engineering for this study. The estimated costs are adjusted to an ENR Construction Cost Index of 1960, an EPA Sewage Treatment Plant Cost Index of 180.73, or an EPA Sewer Construction Cost Index of 200.77.

Capital costs include construction costs, land costs, engineering (10% of construction), administrative (5% of construction)and contingencies (10% of construction). The annual capital costs are calculated using capital recovery factors at interest rates of 5-1/2 percent. The operating and maintenance costs include power (at $.01 KWH), labor (including 25% overhead) and materials and supplies.

The total annual costs at interest rates of 7 and 10% are not included for the sake of brevity but can be easily computed by the use of the appropriate conversion factor. This information may also be found, along with other detailed information such as cost summaries and unit cost data, in the specialty appendix on lagoon treatment and conveyance systems.

TABLE IV-4

Collection System Cost Summary

Based in an Interest Rate of 5½

		Construction Cost Million Dollars	Amortized Construction Cost Thousand Dollars	Annual Operation and Maintenance Thousand Dollars	Total Annual Treatment Cost Thousand Dollars
Raw Wastewater to Treatment Plant Sites					
1.	Algonac and St. Clair to E. China	7.85	.463	.072	.535
2.	Port Huron to E. China	15.19	.897	.138	1.035
3.	Port Huron to E. China	15.60	.921	1.036	1.957
4.	Marysville to Port Huron	3.42	.202	.032	.234
5.	Algonac to E. China	5.24	.309	.033	.342
6.	Wyandotte to Huron River	29.33	1.732	.444	2.176
7.	Melvindale-Wyandotte to Huron River	40.63	2.400	.741	3.141
8.	Melvindale to Huron River	39.52	2.334	.740	3.074
9.	Detroit-Wyandotte to Huron River	158.16	9.341	6.334	15.675
10.	Monroe to Huron River	15.22	.899	.194	1.093
11.	Detroit to Huron River	114.02	6.734	3.892	10.626
Raw Wastewater to Treatment Lagoon Systems					
12.	Macomb Co. Stormwater Lagoons to St. Clair-Sanilac Co. Lagoon System	153.51	9.066	20.078	29.144
13.	Macomb Co. Stormwater Lagoons to St. Clair-Sanilac Co. Lagoons System	275.10	16.248	25.586	41.834
14.	Red Run Area to St. Clair Co. Lagoons	91.14	5.383	3.219	8.602
15.	Warren-Macomb Co. to St. Clair Co. Lagoons	47.44	2.802	1.058	3.860
16.	Wyandotte-Detroit to St. Clair-Sanilac Co. Lagoons	311.23	18.312	11.343	29.725
17.	Port Huron to Algonac to Stormwater Storage Lagoon	45.88	2.710	.362	3.072
18.	Port Huron to Algonac to Stormwater Storage Lagoon	75.26	4.445	.390	4.835
19.	Algonac and Port Huron to St. Clair to Co. Lagoon System	98.27	5.804	2.236	8.040
20.	Algonac to St. Clair to St. Clair Co. Lagoon System	73.24	4.326	1.732	6.058
21.	Algonac to St. Clair to Wales Twp.	14.52	.858	.150	1.008
22.	Algonac to St. Clair to Wales Twp.	41.16	2.431	.969	3.400
23.	Huron River to Monroe Co. Lagoons	110.20	6.509	9.289	15.798
24.	Huron River to Monroe Co. Lagoons	39.13	2.311	3.842	6.153
25.	Huron River to Monroe Co. Lagoons	35.69	2.108	.951	3.059
26.	Detroit to Monroe Co. Lagoons	230.27	13.600	5.729	19.329
27.	Lenawee Co. Interceptor to Lagoon	1.76	.104	.035	.139
Treated Wastewater from Treatment Lagoons to Irrigation Sites					
28.	Distribution to St. Clair-Sanilac Irrigation Site	67.34	3.977	2.037	6.014
29.	St. Clair Lagoon to St. Clair Irrigation Site	16.07	.949	.243	1.192
30.	St. Clair-Sanilac Lagoons to Huron-Tuscola Land Site	187.95	11.100	8.085	19.185
31.	St. Clair-Sanilac Lagoons to Huron-Tuscola Land Site	617.80	38.850	21.247	60.097
32.	St. Clair-Sanilac Lagoons to Huron Co. Land Site	227.00	13.407	2.362	15.769
33.	Monroe Co. Lagoons to Fulton-Williams Land Site	140.28	8.285	7.205	15.490
34.	Monroe Co. Lagoons to Lenawee Co. Land Site	10.79	.637	.334	.971
35.	Monroe Co. Lagoons to Lenawee Co. Land Site	17.60	1.039	.290	1.329
36.	Monroe Co. Lagoons to Lenawee Land Site	10.52	.621	.176	.797
37.	Raisin River to Lenawee Co. Land Site	6.46	.382	.080	.462
38.	Lenawee Co. Lagoons to Lenawee Co. Land Site	4.94	.292	.109	.401
Renovated Water Return Systems					
39.	St. Clair Co. Irrigation to St. Clair R.	44.64	2.636	.107	2.743
40.	St. Clair-Sanilac Co. (north) Irrigation to Lake Huron	36.44	2.152	.572	2.724
41.	St. Clair Co. Irrigation to St. Clair R.	90.29	5.333	.069	5.402
42.	St. Clair Co. Irrigation to St. Clair R.	22.11	1.306	.017	1.323
43.	Wales Twp. to St. Clair River	14.18	.837	.011	.848
44.	St. Clair Co. Irrigation to St. Clair R.	29.68	1.753	.023	1.776
45.	Monroe Co. Irrigation to Lake Erie	26.19	1.547	.064	1.611
46.	N. Monroe Co. Irrigation to Lake Erie	17.64	1.042	.014	1.056
47.	Lenawee Co. Irrigation to Monroe Co. Irrigation to Lake Erie	56.36	3.329	.043	3.372
48.	Lenawee Co. Irrigation to Monroe Co. Irrigation to Lake Erie	30.06	1.775	.023	1.798

Advanced Wastewater Treatment Systems

Initial Investigations Since an advantage of Advanced Wastewater Treatment is that existing conventional treatment facilities can be extensively utilized, systems were investigated which included both up-graded and newly proposed treatment plants. Six major existing plants in Southeastern Michigan were examined as having potential for up-grading to regional AWT plants. They include:

1. Detroit Metro Wastewater Treatment Plant
2. Monroe Wastewater Treatment Plant
3. Port Huron Wastewater Treatment Plant
4. Algonac Wastewater Treatment Plant
5. East China Township Wastewater Treatment Plant
6. Wyandotte Wastewater Treatment Plant

Flow schematics and a written description of all existing facilities at these plants were developed from information obtained on field trips and/or provided by the design consultants for the plants. Completely new plants were developed for a proposed plant near the mouth of the Huron River and for a proposed plant near Adrian. Incorporated in the development of both new and improved plants were facilities for treating stormwater runoff from urban areas and combined sewer overflows.

Alternative wastewater treatment processes were evaluated on their ability to meet complex treatment problems. Several unit processes were evaluated on the basis of ability to meet effluent criteria, reliability, impact on environment and significant intangible and sociological factors.

The result of this evaluation was the development of one proposed treatment scheme which would meet the Corps effluent criteria for all treatment facilities. This scheme is shown in Figure IV-4 and the purpose and reasons for the selection of each unit process are as follows.

Conventional Treatment Through Activated Sludge consists of pumping, screening, grit removal, primary sedimentation, aeration and final sedimentation. Technology is sufficiently well established for these elements of the treatment process that only a single approach has been evaluated in detail. It is expected that these processes will remove about 90 percent of the BOD and suspended solids as well as smaller percentages of other constituents.

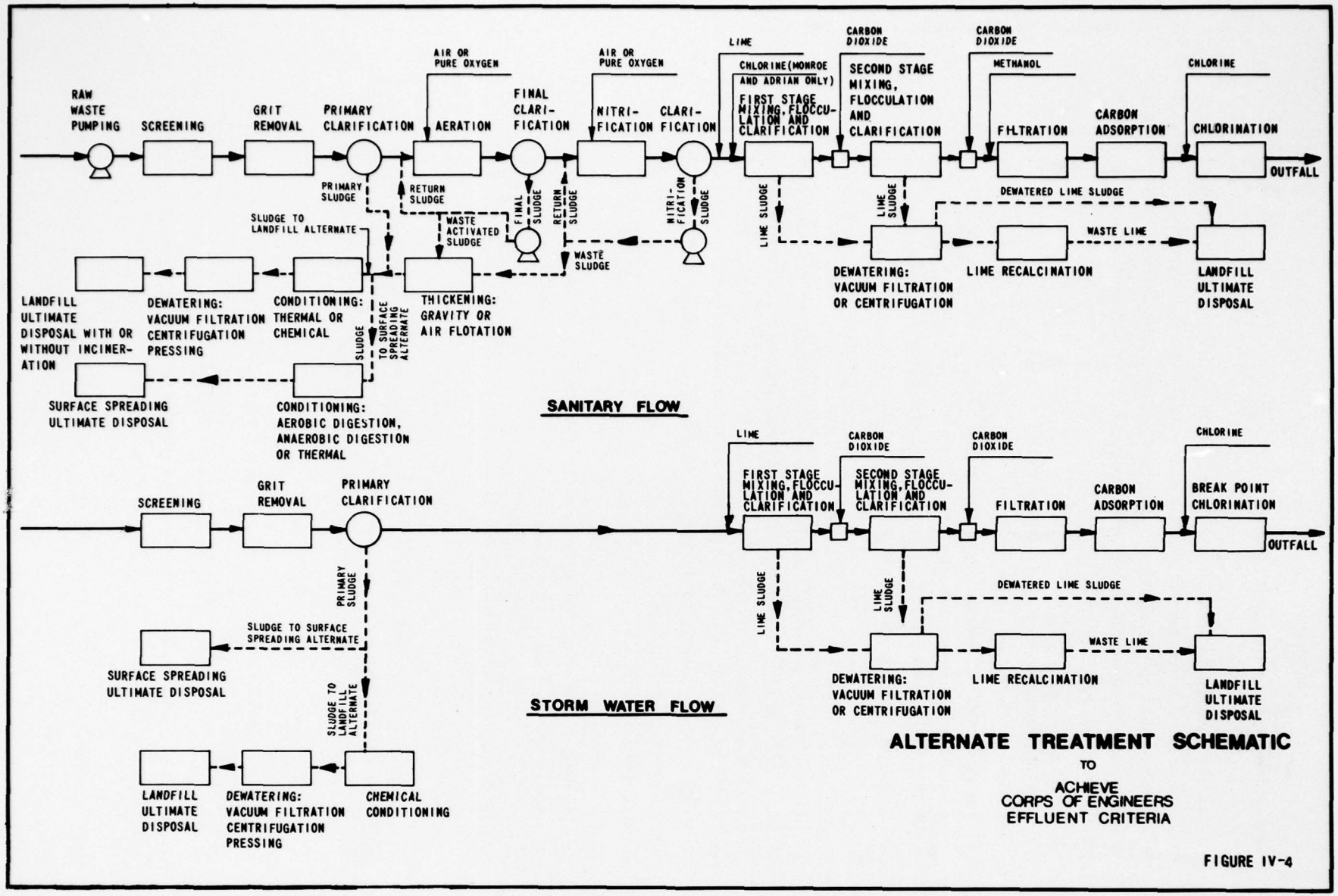

ALTERNATE TREATMENT SCHEMATIC

TO

ACHIEVE
CORPS OF ENGINEERS
EFFLUENT CRITERIA

FIGURE IV-4

Chemical Clarification in the form of two stage lime clarification was proposed for phosphorus and heavy metal removal. Studies have indicated that the two stage process is necessary for high degrees of phosphorus removal with wastewaters low in bicarbonate alkalinity. In addition, the high pH - lower pH of the first and second stages make for optimal precipitation of the heavy methals.

Multi-media filtration is expected to remove about 90 percent of the suspended solids carryover from the clarifiers. The nitrates formed during the nitrification step can be converted to nitrogen gas by denitrifying bacteria if an additional carbon source is present. The removal of this nitrogen is called *denitrification* and studies have shown that 90 percent removal can be accomplished in a packed column reactor similar to the filters. The carbon source is obtained by the addition of methanol. This process requires that the filter be backwashed more frequently but it eliminates the necessity for a separate dispersed growth denitrification reactor following the nitrification step.

Granular activated carbon will adsorb a large fraction of the refractory organic materials remaining after filtration. These materials include tannins, lignins, proteinaceous substances, pesticides, etc. It is expected that a carbon contact time of about 15 minutes will remove 50 - 60 percent of the remaining organics and result in a final effluent BOD and COD of 1 and 10 mg/l, respectively. Further reductions could be obtained with longer contact times or an additional carbon adsorption step. It is also anticipated that carbon adsorption will reduce heavy metals to the final acceptable levels.

Chlorination of the sanitary flow is for disinfection purposes only (with the exception of Adrian) and will reduce the coliform count to a level below 1,000/100 ml. At Adrian, alkaline chlorination will be provided for cyanide removal. Chlorine will be added ahead of lime clarification to accomplish cyanide removal.

Stormwater Treatment facilities were proposed since the intermittent nature of stormwater flow prevents the use of biological treatment steps such as the two-stage activated sludge process for BOD removal and nitrification.

The high settleable solids content of the stormwater indicates that primary sedimentation is a better initial treatment scheme than screening. After primary clarification the stormwater would be treated by two stage lime clarification, multi-media filtration, carbon adsorption, and breakpoint chlorination. Breakpoint chlorination would be used to remove ammonia nitrogen. It is felt this procedure was superior to ion-exchange because of the lower capital cost for a unit process not used continuously. The greatest cost of breakpoint chlorination would be the cost of the chlorine applied. Should ion-exchange be developed in the future to the point where it was economically justified it could be incorporated into the treatment scheme with only the loss of the initial capital cost investment in the over-sized chlorination facilities.

Sludge handling and treatment schemes consist of thickening (biological sludges only), conditioning, stabilization, dewatering and ultimate disposal by landfill (with or without incineration) or surface spreading of wet sludge. Incineration of primary and biological sludges will reduce the volume for transporting to a landfill; the associated cost savings may justify the higher capital investment. Surface spreading wet sludge on the land will require a preliminary stabilization step to avoid detrimental environmental impact.

The chemical sludges from the lime clarification step may or may not be recalcined for lime recovery. Lime recovery by recalcination is estimated at less than 20 percent due to the low alkalinity of the wastewater. In addition, the high fixed suspended solids in the stormwater influent to the chemical clarifiers could make recalcination impractical.

Detailed Investigation Based on information collected and designs developed in the initial investigations, a total of fourteen wastewater treatment plants were selected for further refinement and design. Seven plants were designated to treat municipal and industrial wastes and seven plants, to treat stormwater runoff. At several of the locations, different plant arrangements have been considered to handle specified alternative flow rates. Facilities which were investigated inulude: preliminary, primary, secondary, and advanced wastewater treatment process; sludge treatment and disposal approaches; and effluent discharge piping.

Cost estimates were made for each wastewater treatment plant. Cost curves were developed by Stanley Consultants specifically for this study for each individual unit process utilized. The cost curves were published under the title "Wastewater Treatment Unit Processes, Estimating Costs 1972" and are a part of the specialty appendices of this study. The cost curves were used for evaluation of alternatives and to develop cost estimates for each wastewater treatment plant.

All construction cost estimates are based on a Detroit Water Quality Office construction cost index of 180.73 for January 1972. For comparative purposes and to develop annual costs, construction estimates have been amortized over a period of 50 years at an interest rate of 5-1/2 percent. For unit processes which have a useful life of less than 50 years, an amortized replacement cost has been calculated based on replacing units at 1972 costs. This cost has been spread over the 50-year life of the project at the 5-1/2 percent interest rate.

Operation and maintenance cost estimates are based on a labor cost of six dollars per hour, and on power, fuel, replacement parts, and chemicals at January, 1972, price levels. The estimated cost should be sufficient to operate and maintain the equipment for its useful life.

The following discussion presents the fourteen treatment plant designs along with detailed assessments of the costs involved.

Municipal & Industrial treatment plants have been designed at various locations and for various flows. The seven plants, their locations and flows are listed below.

Location	**Flow**
Adrian-Tecumseh	12 MGD
Port Huron	24 MGD
Monroe	40 MGD
Wyandotte	125 MGD
Mouth of Huron River	400 MGD
Mouth of Huron River	525 MGD
Detroit	806 MGD

Following is a brief discussion of each of the seven municipal-industrial wastewater treatment plants which outlines features unique to each particular location.

Adrian-Tecumseh (12 mgd) The flow schematic for the proposed Adrian wastewater treatment plant is presented in Figure IV-5. This would be a completely new facility.

Adrian-Tecumseh is the only plant with cyanide in the raw wastewater profile. Therefore, a unique feature of the Adrian-Tecumseh facility is the use of alkaline chlorination for cyanide removal. This process involves addition of chlorine ahead of the lime clarification process to oxidize the cyanide ion to carbon dioxide and nitrogen gas.

The proposed sludge handling sequence for the Adrian-Tecumseh plant consists of flotation thickening of waste biological sludge prior to mixing with primary sludge. The mixed sludges would be thermally conditioned and dewatered on vacuum filters. Sludge cake from the vacuum filters would be hauled to landfill for disposal with liquor from the thickening, thermal conditioning, and dewatering processes, returned to the wastewater flow ahead of the aeration tanks. Chemical sludge from the lime clarification process would be dewatered on vacuum filters with the sludge cake hauled to landfill disposal. Filtrate from the vacuum filter process, and multi-media filter backwash water would be returned to the flow stream entering the first-stage chemical clarifier. Sludge holding facilities with mixing equipment would be provided for both the mixed primary and waste biological sludge, and the chemical sludge from the lime clarification process.

Port Huron(24 mgd) The proposed Port Huron wastewater treatment plant is designed to take maximum advantage of existing facilities. The flow schematic for the proposed plant is shown in Figure IV-6. Existing raw water pumping, preliminary treatment, primary clarification, secondary clarification, and chlorination facilities are of adequate design and sufficient capacity to be incorporated in the proposed expanded treatment facility. The existing activated sludge capacity would be used and supplemented by an additional 4 mgd to bring this unit process up to design capacity. The remaining processes (nitrification, chemical clarification, multi-media filtration, denitrification, and carbon adsorption) are proposed as completely new installations.

Primary and waste activated sludge would be mixed prior to thickening in an existing gravity thickener. The thickened sludge would be thermally conditioned in existing units and dewatered with existing centrifuges. The dewatered sludge would be hauled to a landfill for disposal. Lime sludge from the two-stage lime clarification process would be dewatered on new vacuum filters with sludge cake hauled to landfill for disposal. Sludge holding facilities for the primary and waste biological sludge are four old anaerobic digesters converted to holding tanks. New sludge holding tanks are neessary for the chemical sludge.

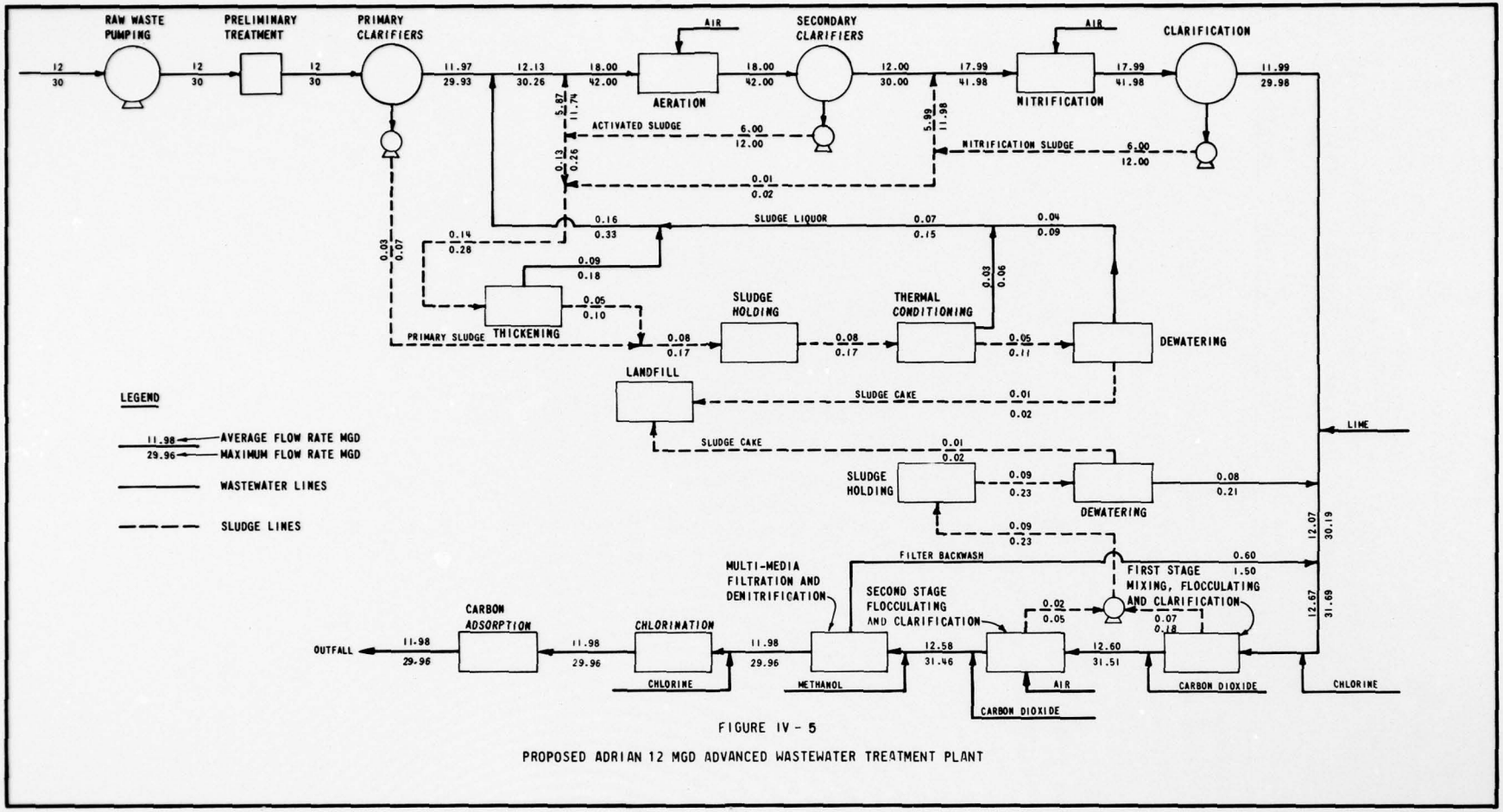

FIGURE IV - 5

PROPOSED ADRIAN 12 MGD ADVANCED WASTEWATER TREATMENT PLANT

AD-A041 115 SOUTHEASTERN MICHIGAN WASTEWATER MANAGEMENT SURVEY SCOPE STUDY DESIGN AND COST APPENDIX(U) CORPS OF ENGINEERS DETROIT MICH DDTROIT DISTRICT MAY 74 2/6

UNCLASSIFIED F/G 13/2 NL

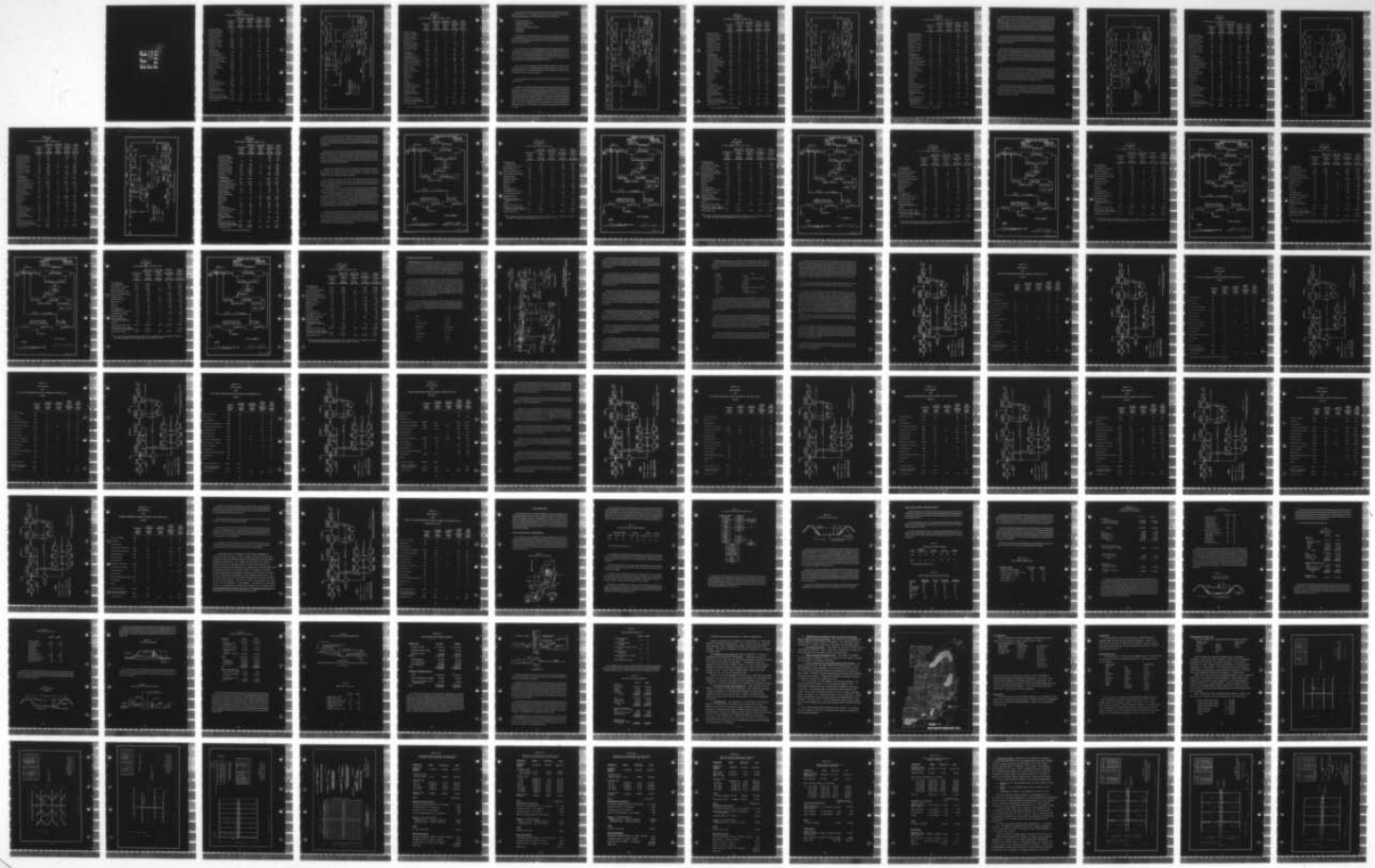

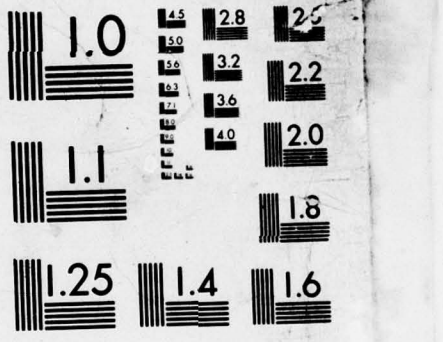
1.0
1.1
1.25
1.4
1.6
1.8
2.0
2.2
2.8
3.2
3.6
4.0
4.5
5.0
5.6
6.3
7.1

TABLE IV-5

COST ESTIMATE
FOR
12 MGD ADRIAN WASTEWATER TREATMENT PLANT

	Construction Cost Millions of Dollars	Amortized Construction Cost Thousands of Dollars Per Year	Amortized Replacement Cost Thousands of Dollars Per Year	Operation and Maintenance Thousands of Dollars Per Year	Total Treatment Cost Thousands of Dollars Per Year
Raw Waste Pumping	0.81	48	--	18	66
Preliminary Treatment	0.18	11	--	25	36
Primary Clarifiers	0.39	23	--	21	44
Intermediate Pumping	--	--	--	--	--
Aeration Tanks	0.57	34	--	--	34
Diffused Air System	0.51	30	8	91	129
Secondary Clarifiers	0.59	35	--	25	60
Nitification Tanks	0.63	37	--	--	37
Diffused Air System	0.64	38	10	114	162
Clarifiers	0.59	35	--	25	60
Two-Stage Lime Clarification	1.20	71	--	198	269
Multi-Media Filtration Denitrification	1.80	106	--	206	312
Granular Carbon Adsorption	2.05	121	3	190	314
Chlorine Contact Tanks	--	--	--	--	--
Chlorination Feed System	0.37	22	--	20	42
Sludge Holding	0.10	6	--	9	15
Sludge Thickening	0.08	5	1	4	10
Thermal Conditioning	0.69	41	11	37	89
Dewatering	0.39	23	6	64	93
Recalcination	--	--	--	--	--
Incineration	--	--	--	--	--
Hauling	0.03	2	2	33	37
Landfill	0.31	18	4	99	121
Instrumentation	0.23	14	--	12	26
Land Required (27 acres)	0.04	2	--	--	2
Site Work and Piping	0.81	48	--	31	79
Garage and Shop	0.06	4	--	--	4
Administration and Laboratory Facilities	0.17	10	--	61	71
Outfall	0.06	4	--	--	4
Total Construction Cost	13.30	788	45	1,283	2,116
Engineering, Legal, Administration, and Contingencies	3.99	236	--	--	236
Total Project Cost	17.29	1,024	45	1,283	2,352

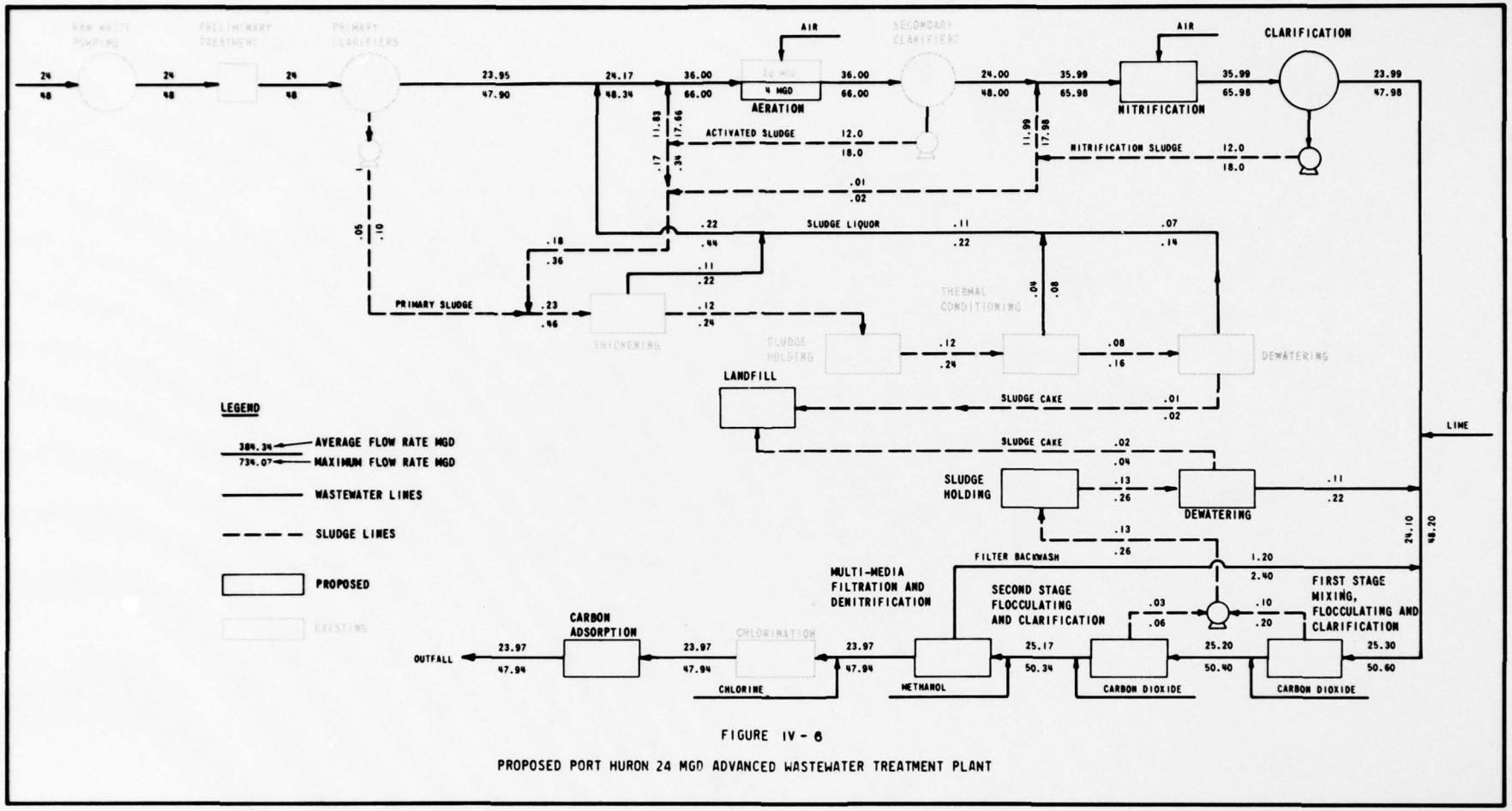

FIGURE IV - 6

PROPOSED PORT HURON 24 MGD ADVANCED WASTEWATER TREATMENT PLANT

TABLE IV-6

COST ESTIMATE
FOR
24 MGD PORT HURON WASTEWATER TREATMENT PLANT

	Construction Cost Millions of Dollars	Amortized Construction Cost Thousands of Dollars Per Year	Amortized Replacement Cost Thousands of Dollars Per Year	Operation and Maintenance Thousands of Dollars Per Year	Total Treatment Cost Thousands of Dollars Per Year
Raw Waste Pumping	--	--	--	29	29
Preliminary Treatment	--	--	--	41	41
Primary Clarifiers	--	--	--	30	30
Intermediate Pumping	--	--	--	--	--
Aeration Tanks	0.26	15	--	--	15
Diffused Air System	0.16	9	9	104	122
Secondary Clarifiers	--	--	--	39	39
Nitrification Tanks	1.10	65	--	--	65
Diffused Air System	0.71	42	11	125	178
Clarifiers	1.02	60	--	39	99
Two-Stage Lime Clarification	1.95	115	--	364	479
Multi-Media Filtration Denitrification	2.42	143	--	359	502
Granular Carbon Adsorption	3.45	204	5	298	507
Chlroine Contact Tanks	--	--	--	--	--
Chlorination Feed System	0.40	24	--	31	55
Sludge Holding	0.07	4	--	24	28
Sludge Thickening	--	--	--	6	6
Thermal Conditioning	--	--	13	49	62
Dewatering	0.22	13	11	119	143
Recalcination	--	--	--	--	--
Incineration	--	--	--	--	--
Hauling	0.07	4	5	61	70
Landfill	0.48	28	6	143	177
Instrumentation	0.18	11	--	9	20
Land Required (38 acres)	*	*	--	--	*
Site Work and Piping	0.71	42	--	54	96
Garage and Shop	0.05	3	--	--	3
Administration and Laboratory Facilities	0.09	5	--	88	93
Outfall	--	--	--	--	--
Total Construction Cost	13.34	787	60	2,012	2,859
Engineering, Legal, Administration, and Contingencies	4.00	236	--	--	236
Total Project Cost	17.34	1,023	60	2,012	3,095

* Cost of additional land is not available.

Monroe (40 mgd) A flow schematic for the proposed Monroe wastewater treatment plant is presented in Figure IV-7. As indicated, extensive use has been made of existing facilities although additional capacity would be required in the following processes.

1. Raw waste pumping.
2. Screening and grit removal.
3. Primary clarification.
4. Aeration and secondary clarification.
5. Incineration.
6. Chlorination.

The Monroe plant is presently designed to provide primary treatment for 22 mgd of municipal-industrial wastewater. Existing units following primary clarification are designed to handle an additional 18 mgd of paper mill wastewater. An intermediate pumping lift is provided ahead of the aeration phase.

Existing air flotation units would be supplemented with additional capacity to dewater the expected increased quantitites of waste biological sludge. Primary sludge would be mixed with thickened waste biological sludge before chemical conditioning and dewatering on vacuum filters. A lower than average vacuum filtration rate of 3.5 pounds per hour per square foot has been utilized in this plant because paper mill sludge is difficult to dewater. Additional capacity would be necessary to supplement the existing vacuum filters.

Filter cake would be incinerated and the ash hauled to landfill for disposal. Existing incinerator capacity will be expanded to handle an additional 9.4 tons per day of dry solids. Lime sludge from the chemical clarification process will be dewatered on vacuum filters with the filter cake hauled to a landfill for disposal.

All of the advanced waste treatment units in the flow schematic have been designed as entirely new units.

Wyandotte (125 mgd) The Wyandotte wastewater treatment plant also takes maximum advantage of existing treatment facilities. A flow schematic of the proposed facility is presented in Figure IV-8. The raw waste pumping and preliminary treatment units at the existing plant have sufficient capacity to meet the specified design flow rate. Primary clarification and intermediate pumping require expansion of capacity. A pure oxygen activated sludge process is presently utilized; however, sufficient capacity is not provided to meet the 125 mgd design value. A pure oxygen system addition is proposed for secondary treatment of an additional 25 mgd. Construction of additional capacity is also required for secondary clarification and chlorination facilities. The remainder of the wastewater treatment processes are designed as new units.

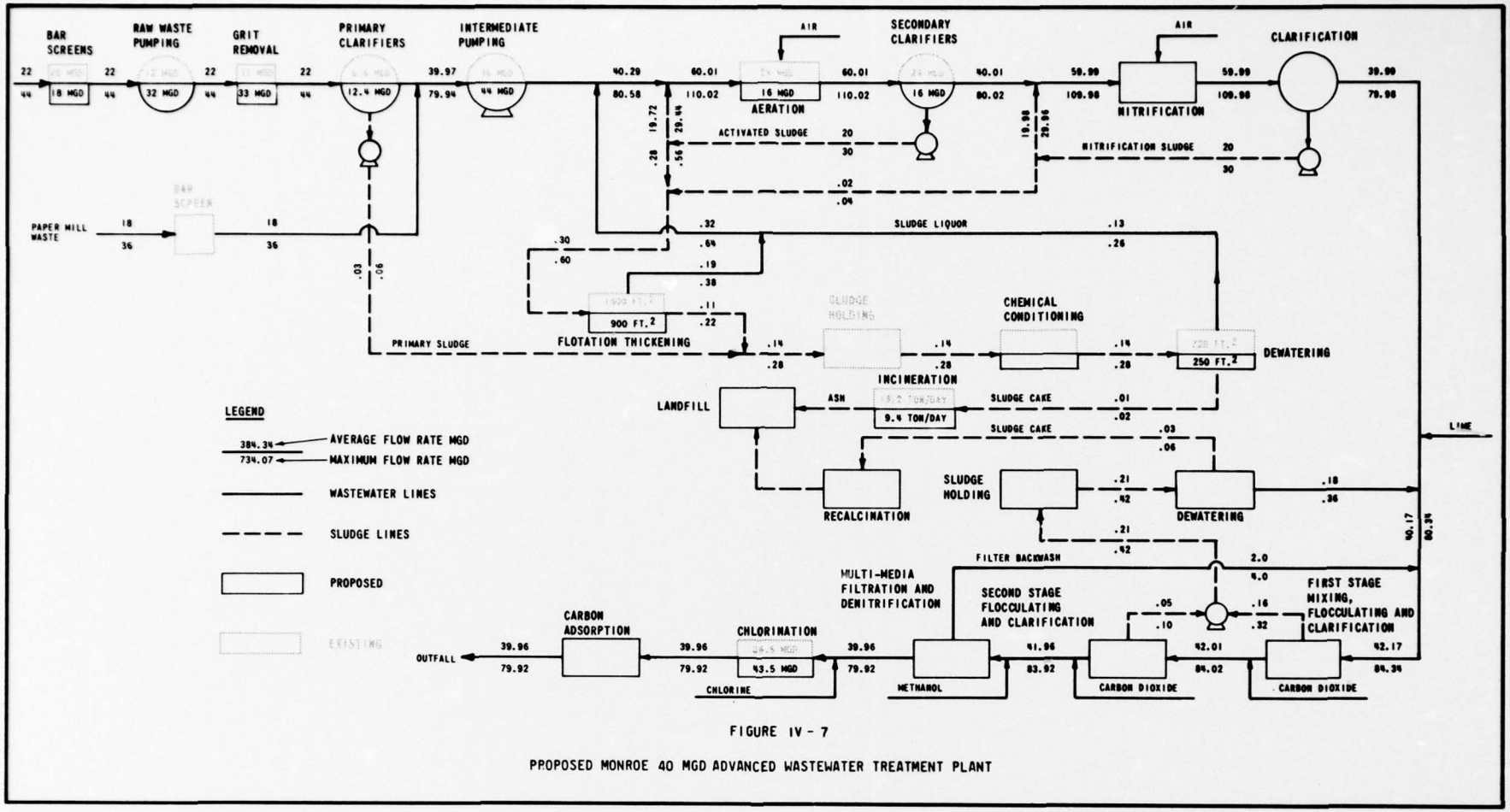

FIGURE IV - 7

PROPOSED MONROE 40 MGD ADVANCED WASTEWATER TREATMENT PLANT

TABLE IV-7

COST ESTIMATE
FOR
40 MGD MONROE WASTEWATER TREATMENT PLANT

	Construction Cost Millions of Dollars	Amortized Construction Cost Thousands of Dollars Per Year	Amortized Replacement Cost Thousands of Dollars Per Year	Operation and Maintenance Thousands of Dollars Per Year	Total Treatment Cost Thousands of Dollars Per Year
Raw Waste Pumping	0.85	50	--	45	95
Preliminary Treatment	0.18	11	--	63	74
Primary Clarifiers	0.41	24	--	40	64
Intermediate Pumping	1.10	65	--	39	104
Aeration Tanks	0.71	42	--	--	42
Diffused Air System	0.52	31	17	194	242
Secondary Clarifiers	0.73	43	--	57	100
Nitrification Tanks	1.67	99	--	--	99
Diffused Air System	1.13	67	18	205	290
Clarifiers	1.58	93	--	57	150
Two-Stage Lime Clarification	2.88	170	--	569	739
Multi-Media Filtration Denitrification	3.50	207	--	548	755
Granular Carbon Adsorption	5.30	313	8	431	752
Chlorine Contact Tanks	0.10	6	--	--	6
Chlorination Feed System	0.57	34	--	43	77
Sludge Holding	--	--	--	24	24
Sludge Thickening	0.09	5	2	11	18
Thermal Conditioning	--	--	--	--	--
Dewatering	0.52	31	13	204	248
Recalcination	--	--	--	--	--
Incineration	0.70	41	19	131	191
Hauling	0.05	3	4	41	48
Landfill	0.45	27	5	136	168
Instrumentation	0.23	14	--	17	31
Land Required (50 acres)	*	*	--	--	*
Site Work and Piping	1.13	67	--	82	149
Garage and Shop	0.07	4	--	--	4
Administration and Laboratory Facilities	0.11	6	--	120	126
Outfall	--	--	--	--	--
Total Construction Cost	24.58	1,453	86	3,057	4,596
Engineering, Legal, Administration, and Contingencies	7.37	435	--	--	435
Total Project Cost	31.95	1,888	86	3,057	5,031

* Cost of additional land is not available.

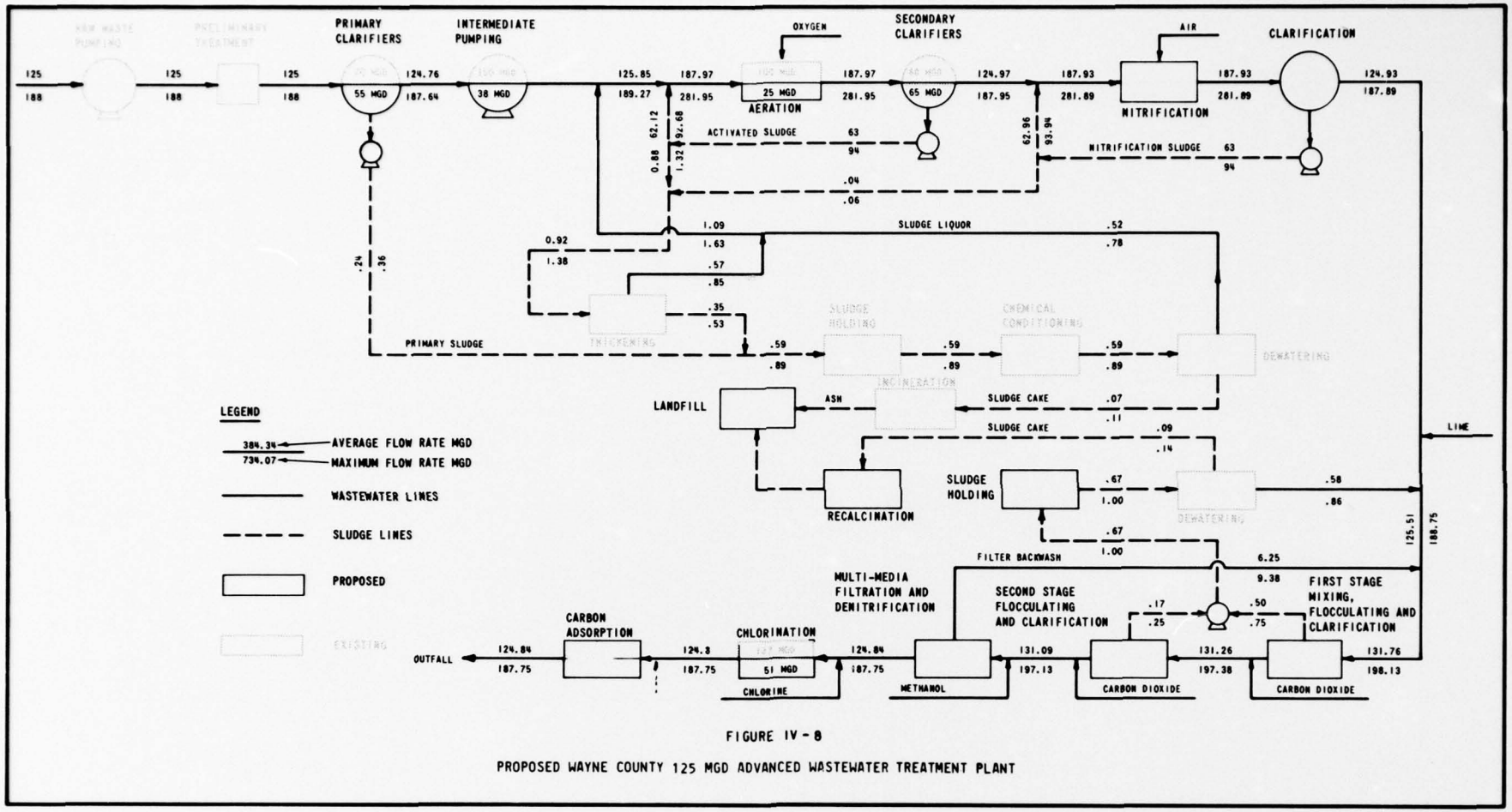

FIGURE IV - 8

PROPOSED WAYNE COUNTY 125 MGD ADVANCED WASTEWATER TREATMENT PLANT

TABLE IV-8

COST ESTIMATE
FOR
125 MGD WYANDOTTE WASTEWATER TREATMENT PLANT

	Construction Cost Millions of Dollars	Amortized Construction Cost Thousands of Dollars Per Year	Amortized Replacement Cost Thousands of Dollars Per Year	Operation and Maintenance Thousands of Dollars Per Year	Total Treatment Cost Thousands of Dollars Per Year
Raw Waste Pumping	--	--	--	135	135
Preliminary Treatment	--	--	--	164	164
Primary Clarifiers	1.4	83	--	79	162
Intermediate Pumping	1.0	59	--	119	178
Aeration Tanks	0.5	30	--	--	30
Diffused Air System	0.7	41	40	526	607
Secondary Clarifiers	2.4	142	--	144	286
Nitrification Tanks	4.6	272	--	--	272
Diffused Air System	2.2	130	34	412	576
Clarifiers	4.4	260	--	144	404
Two-Stage Lime Clarification	8.0	473	--	1,643	2,116
Multi-Media Filtration Denitrification	7.0	413	--	1,483	1,896
Granular Carbon Adsorption	14.0	827	22	1,049	1,898
Chlorine Contact Tanks	0.1	6	--	--	6
Chlorination Feed System	0.9	53	--	98	151
Sludge Holding	0.2	11	--	34	45
Sludge Thickening	--	--	5	43	48
Thermal Conditioning	--	--	--	--	--
Dewatering	--	--	26	559	585
Recalcination	1.3	77	20	818	915
Incineration	--	--	--	393	393
Hauling	0.1	6	7	78	91
Landfill	0.4	24	5	104	133
Instrumentation	0.5	30	--	25	55
Land Required (100 acres)	*	*	--	--	*
Site Work and Piping	2.4	142	--	201	343
Garage and Shop	0.1	6	--	--	6
Administration and Laboratory Facilities	0.2	12	--	228	240
Outfall	--	--	--	--	--
Total Construction Cost	52.4	3,097	159	8,479	11,735
Engineering, Legal, Administration and Contingencies	15.7	927	--	--	927
Total Project Cost	68.1	4,024	159	8,479	12,662

* Cost of additional land is not available.

Sludge facilities at the existing plant are adequate for expected volumes of both primary and waste biological sludge. These facilities include thickening, sludge holding, chemical conditioning, vacuum filtration, and incineration. Lime sludge from the clarification process will be dewatered on existing vacuum filters prior to recalcination. Recalcination furnaces heat the calcium sludge, driving off the water and carbon dioxide and leaving only calcium oxide (quick lime). A portion of the calcium oxide would be wasted to prevent a buildup of impurities. The waste ash from the recalcination furnaces would be hauled to a landfill for disposal.

Huron River (400 mgd and 525 mgd) Two plant designs have been developed for the site at the Mouth of the Huron River. Both are designed as completely new facilities and both utilize the same wastewater treatment unit processes. Flow schematics for the two plants are presented in Figures IV-9 and IV-10.

The same general arrangement for treatment of the liquid wastes as previously outlined would be utilized. Sludge treatment facilities consist of flotation thickening of waste biological sludge which is then mixed with primary sludge. The mixed sludge is chemically conditioned and dewatered on vacuum filters with the resulting filter cake hauled to a landill for disposal. Lime sludge from the chemical clarification process would be dewatered on vacuum filters and the sludge cake would be recalcined to recover lime. Waste recalcination ash would be hauled to a landfill.

Detroit (806 mgd) The flow schematic for the proposed Detroit wastewater treatment facility is presented in Figure IV-11. Raw waste pumping, preliminary treatment, and chlorination facilities at the existing Detroit plant are of sufficient capacity to handle the specified flow volume. Existing primary clarification, aeration, and secondary clarification unit processes will be utilized in the proposed facility, but will require expansion of present capacity. The remaining wastewater treatment processes are designed as new units.

Waste biological sludge is thickened and mixed with primary sludge. The mixed sludge is then chemically conditioned and dewatered on existing vacuum filters with the filter cake hauled to a landfill for disposal. Lime sludge from the chemical clarification process would be dewatered on existing vacuum filters with the sludge cake recalcined. Waste recalcination ash would also be hauled to a landfill.

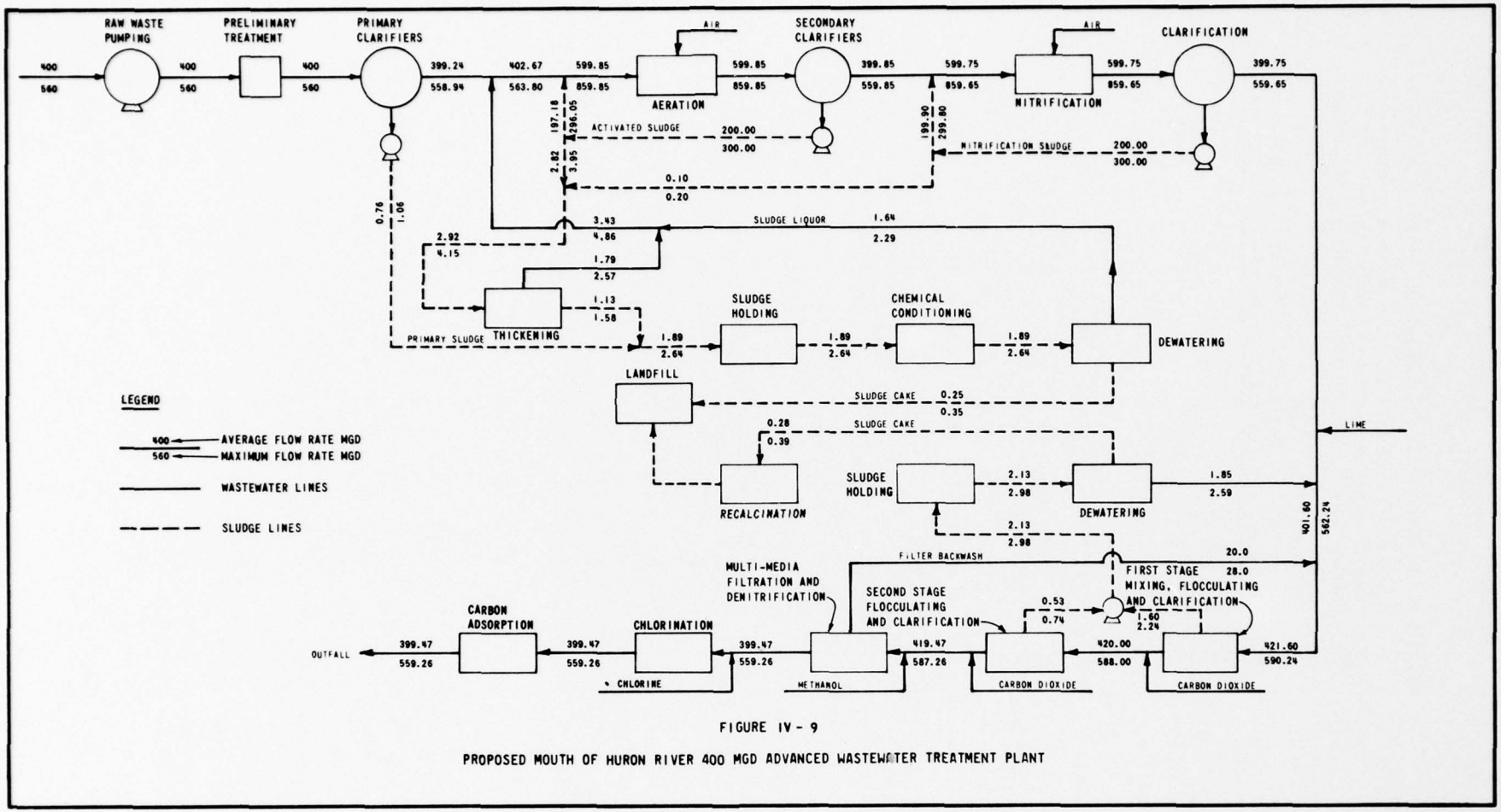

FIGURE IV - 9

PROPOSED MOUTH OF HURON RIVER 400 MGD ADVANCED WASTEWATER TREATMENT PLANT

TABLE IV-9

COST ESTIMATE
FOR

400 MGD HURON RIVER WASTEWATER TREATMENT PLANT

	Construction Cost Millions of Dollars	Amortized Construction Cost Thousands of Dollars Per Year	Amortized Replacement Cost Thousands of Dollars Per Year	Operation and Maintenance Thousands of Dollars Per Year	Total Treatment Cost Thousands of Dollars Per Year
Raw Waste Pumping	8.8	520	--	409	929
Preliminary Treatment	1.4	83	--	445	528
Primary Clarifiers	8.6	508	--	177	685
Intermediate Pumping	--	--	--	--	--
Aeration Tanks	11.5	679	--	--	679
Diffused Air System	5.3	313	82	1,113	1,508
Secondary Clarifiers	12.8	756	--	390	1,146
Nitrification Tanks	13.7	809	--	--	809
Diffused Air System	5.3	313	82	1,124	1,519
Clarifiers	12.8	756	--	390	1,146
Two-Stage Lime Clarification	22.5	1,329	--	4,920	6,249
Multi-Media Filtration Denitrification	20.5	1,211	--	4,278	5,489
Granular Carbon Adsorption	39.0	2,303	60	2,803	5,166
Chlorine Contact Tanks	0.9	53	--	--	53
Chlorination Feed System	2.0	118	--	246	364
Sludge Holding	0.8	47	--	55	102
Sludge Thickening	0.6	35	9	21	65
Thermal Conditioning	--	--	--	--	--
Dewatering	4.7	278	73	1,552	1,903
Recalcination	2.4	142	37	2,190	2,369
Incineration	--	--	--	--	--
Hauling	0.3	18	22	369	409
Landfill	3.4	201	38	722	961
Instrumentation	1.4	83	--	70	153
Land Required (205 acres)	0.3	18	--	--	18
Site Work and Piping	6.1	360	--	511	871
Garage and Shop	0.7	41	--	--	41
Administration and Laboratory Facilities	1.3	77	--	438	515
Outfall	0.4	24	--	--	24
Total Construction Cost	187.5	11,075	403	22,223	33,701
Engineering, Legal, Administration, and Contingencies	56.3	3,325	--	--	3,325
Total Project Cost	243.8	14,400	403	22,223	37,026

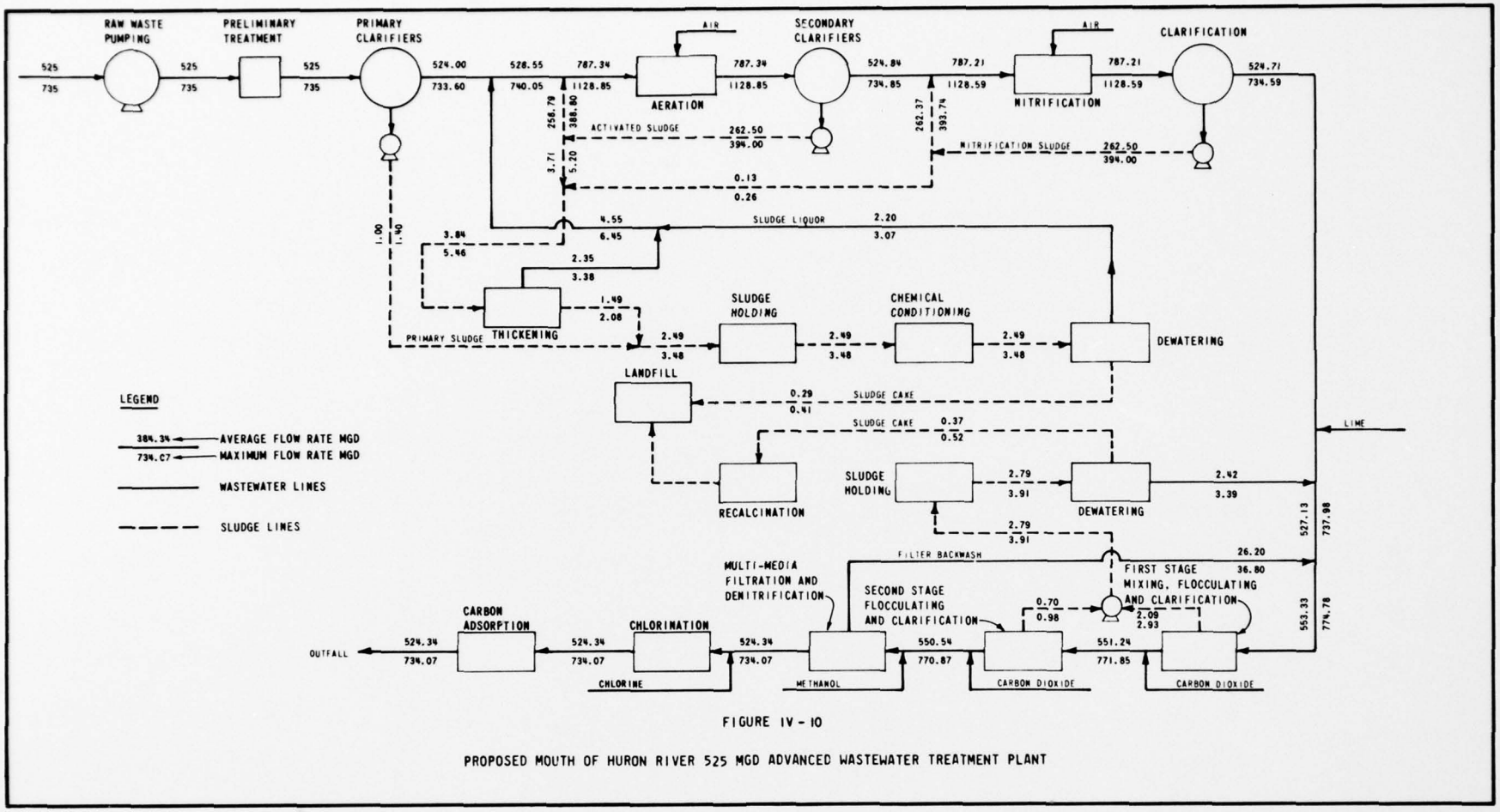

FIGURE IV - 10

PROPOSED MOUTH OF HURON RIVER 525 MGD ADVANCED WASTEWATER TREATMENT PLANT

TABLE IV-10

COST ESTIMATE
FOR

525 MGD HURON RIVER WASTEWATER TREATMENT PLANT

	Construction Cost Millions of Dollars	Amortized Construction Cost Thousands of Dollars Per Year	Amortized Replacement Cost Thousands of Dollars Per Year	Operation and Maintenance Thousands of Dollars Per Year	Total Treatment Cost Thousands of Dollars Per Year
Raw Waste Pumping	10.8	638	--	527	1,165
Preliminary Treatment	1.7	100	--	565	665
Primary Clarifiers	11.1	656	--	218	874
Intermediate Pumping	--	--	--	--	--
Aeration Tanks	15.0	886	--	--	886
Diffused Air System	6.6	390	102	1,441	1,933
Secondary Clarifiers	16.7	986	--	498	1,484
Nitrification Tanks	17.6	1,039	--	--	1,039
Diffused Air System	6.6	390	102	1,438	1,930
Clarifiers	16.7	986	--	498	1,484
Two-Stage Lime Clarification	29.0	1,713	--	6,381	8,094
Multi-Media Filtration Denitrification	27.0	1,595	--	5,519	7,114
Granular Carbon Adsorption	51.0	3,012	79	3,603	6,694
Chlorine Contact Tanks	1.1	65	--	--	65
Chlorination Feed System	2.5	148	--	308	456
Sludge Holding	0.9	53	--	68	121
Sludge Thickening	0.8	47	12	28	87
Thermal Conditioning	--	--	--	--	--
Dewatering	5.9	348	91	2,008	2,447
Recalcination	2.7	159	42	2,930	3,131
Incineration	--	--	--	--	--
Hauling	0.4	24	29	485	538
Landfill	4.1	242	46	797	1,085
Instrumentation	1.8	106	--	90	196
Land Required (245 acres)	0.3	20	--	--	20
Site Work and Piping	7.9	467	--	632	1,099
Garage and Shop	0.8	47	--	--	47
Administration and Laboratory Facilities	1.6	95	--	517	612
Outfall	0.4	24	--	--	24
Total Construction Cost	241.0	14,236	503	28,551	43,290
Engineering, Legal, Administration, and Contingencies	72.3	4,270	--	--	4,270
Total Project Cost	313.3	18,506	503	28,551	47,560

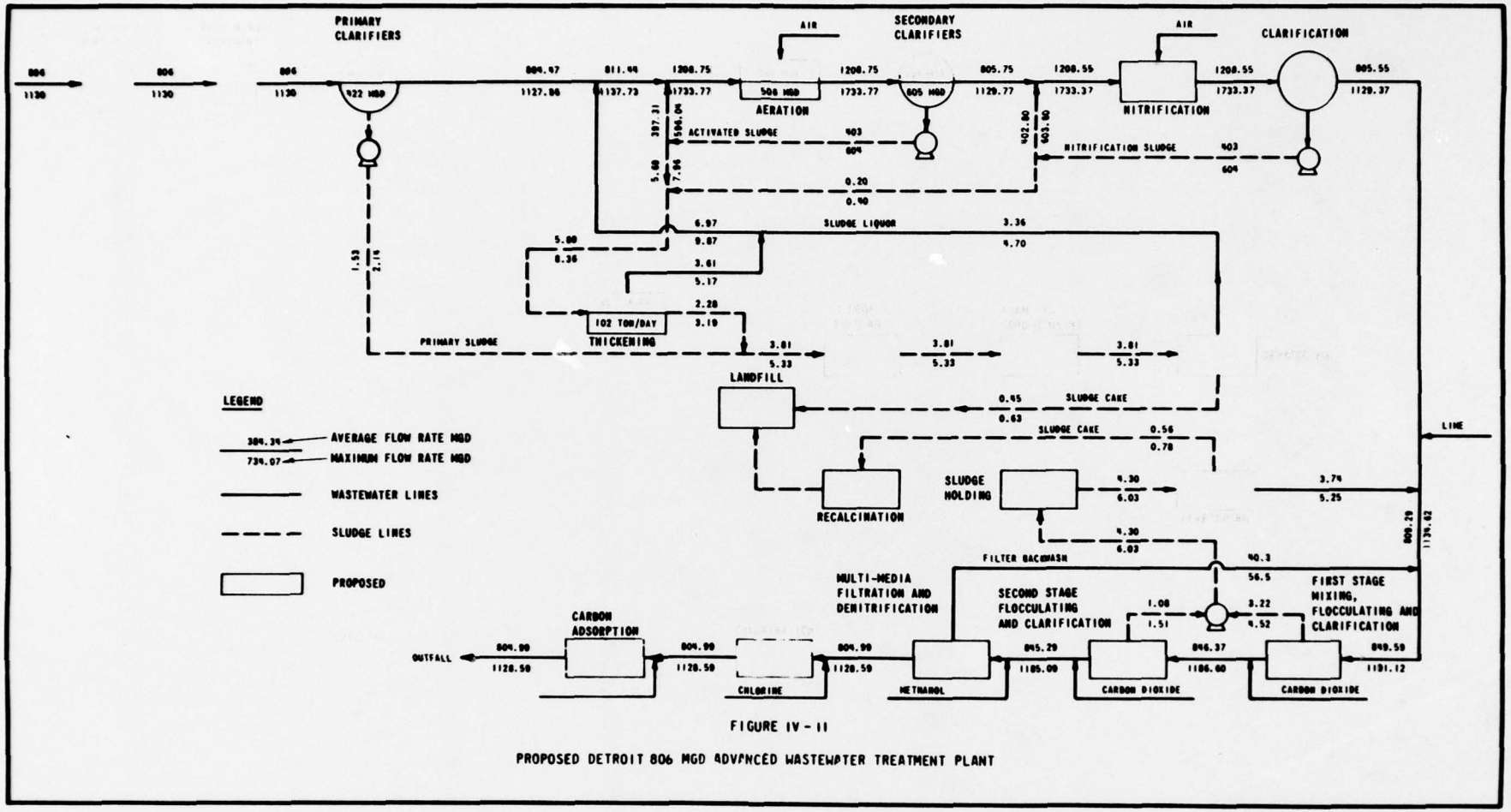

FIGURE IV - 11

PROPOSED DETROIT 806 MGD ADVANCED WASTEWATER TREATMENT PLANT

TABLE IV-11

COST ESTIMATE
FOR
806 MGD DETROIT WASTEWATER TREATMENT PLANT

	Construction Cost Millions of Dollars	Amortized Construction Cost Thousands of Dollars Per Year	Amortized Replacement Cost Thousands of Dollars Per Year	Operation and Maintenance Thousands of Dollars Per Year	Total Treatment Cost Thousands of Dollars Per Year
Raw Waste Pumping	--	--	--	794	794
Preliminary Treatment	--	--	--	818	818
Primary Clarifiers	9.0	532	--	318	850
Intermediate Pumping	--	--	--	--	--
Aeration Tanks	14.5	856	--	--	856
Diffused Air System	6.4	378	142	2,124	2,644
Secondary Clarifiers	19.0	1,122	--	730	1,852
Nitrification Tanks	27.0	1,595	--	--	1,595
Diffused Air System	9.3	549	144	2,156	2,849
Clarifiers	25.0	1,477	--	730	2,207
Two-Stage Lime Clarification	43.0	2,540	--	9,620	12,160
Multi-Media Filtration Denitrification	42.0	2,481	--	8,178	10,659
Granular Carbon Adsorption	75.0	4,430	116	5,295	9,841
Chlorine Contact Tanks	--	--	--	--	--
Chlorination Feed System	3.5	207	--	450	657
Sludge Holding	0.7	41	--	89	130
Sludge Thickening	0.6	35	17	42	94
Thermal Conditioning	--	--	--	--	--
Dewatering	--	--	138	2,940	3,078
Recalcination	3.4	201	53	4,350	4,604
Incineration	--	--	--	--	--
Hauling	0.5	30	36	925	991
Landfill	6.5	384	72	1,218	1,674
Instrumentation	2.0	118	--	100	218
Land Required (320 acres)	*	*	--	--	*
Site Work and Piping	9.9	585	--	897	1,482
Garage and Shop	0.6	35	--	--	35
Administration and Laboratory Facilities	0.7	41	--	647	688
Outfall	--	--	--	--	--
Total Construction Cost	298.6	17,637	718	42,421	60,776
Engineering, Legal, Administration, and Contingencies	89.6	5,292	--	--	5,292
Total Project Cost	388.2	22,929	718	42,421	66,068

* Cost of additional land is not available.

Encl. 4

Stormwater treatment plants were designed to treat urban runoff and wet weather overflow from combined sewer systems. Stormwater storage facilities will reduce peak flow rates to the treatment plants and also to provide a more uniform treatment rate. The seven stormwater treatment plants were designed for treatment rates of 125, 225, 400, 600, 1000, 1200 and 1400 mgd.

Flow schematics for the seven proposed stormwater treatment facilities are presented in Figures IV-12 through IV-18. All plants are designed as completely new facilities and all use the same treatment processes. Stormwater is pumped at a controlled rate from temporary storage facilities. It has been assumed that the equivalent of primary treatment is provided at the storage site. Treatment arrangements presented herein, therefore, deal only with the secondary and advanced waste treatment requirements.

Alternatives for biological treatment of the stormwater flow were evaluated in detail. It was concluded that biological systems cannot be operated in a manner that responds satisfactorily to the intermittent nature of stormwater flows. The proposed stormwater treatment plants consist of the following unit processes:

1. Two-stage lime clarification. This unit process is identical to that provided for the treatment of municipal and industrial wastewaters except that recarbonation is not required after the second stage of lime clarification. Adjustment of pH would be accomplished in the breakpoint chlorination process.

2. Multi-media filtration. This process is also the same as proposed for the municipal and industrial wastewater flow. The units would provide only solids removal; however, methanol would not be added and denitrification would not be accomplished in the filtration step.

3. Activated carbon adsorption. A two-stage carbon adsorption process is proposed with breakpoint chlorination provided between the two stages. The carbon adsorption would provide the desired degree of removal of soluble organics. Breakpoint chlorination would eliminate ammonia nitrogen. The second stage of carbon adsorption is required to remove toxic chloramine generated by chlorination. Breakpoint chlorination would also lower the pH of the wastewater from approximately 9.5 to slightly over 6.0.

Sludge handling at all of the plants consists of vacuum filtration of the lime sludge. The filter cake would be recalcined to recover part of the lime at all plants with the exception of East China. Waste ash from the recalcination furnaces would be hauled to a landfill for disposal. At the East China plant dewatered sludge would be hauled directly to landfill. Filtrate from the dewatering process and backwash from multi-media filters would be returned to the wastewater flow ahead of the two-stage lime clarification process.

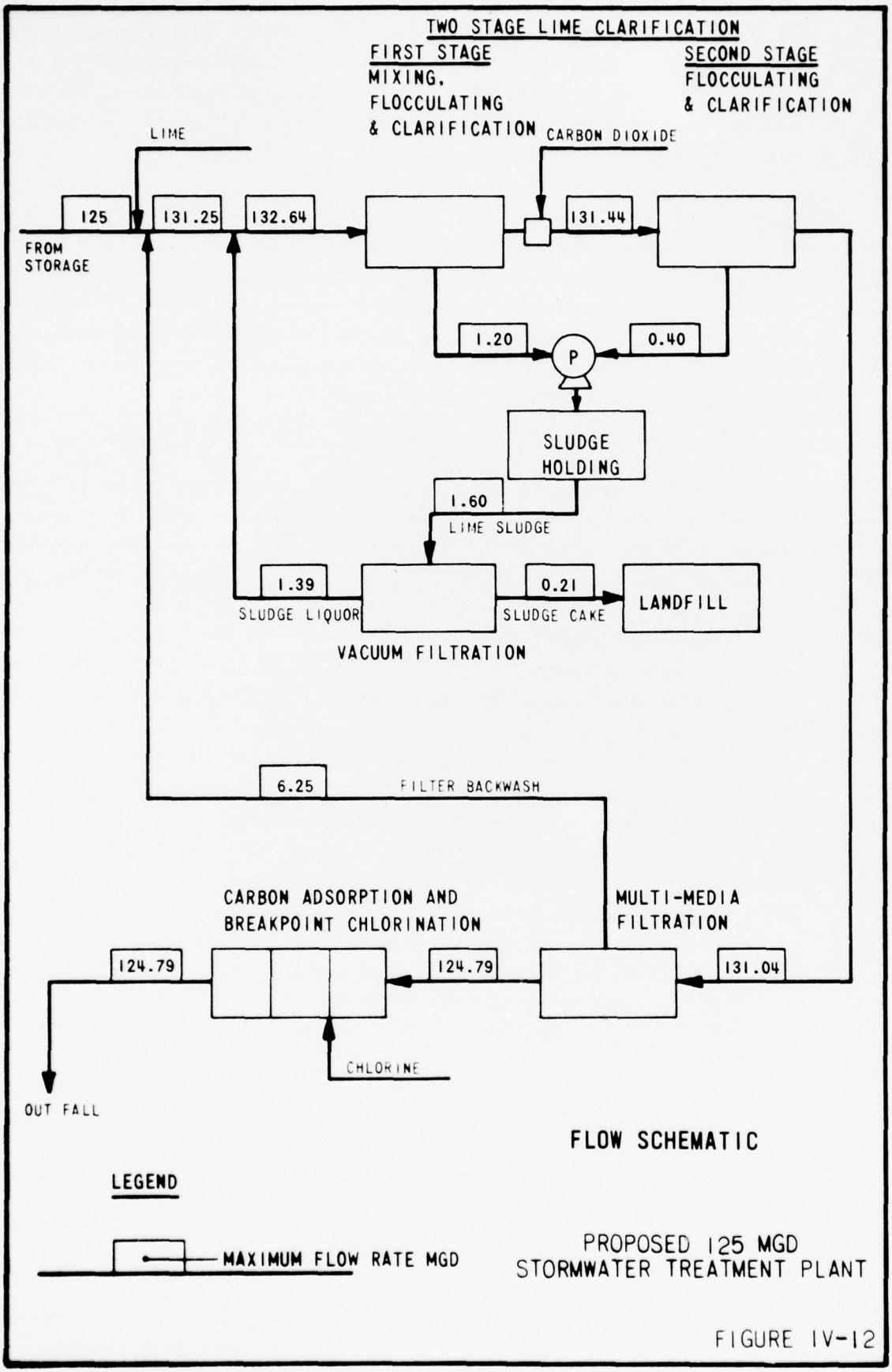
TWO STAGE LIME CLARIFICATION
FIRST STAGE
MIXING,
FLOCCULATING
& CLARIFICATION
SECOND STAGE
FLOCCULATING
& CLARIFICATION
LIME
CARBON DIOXIDE
125
131.25
132.64
131.44
FROM
STORAGE
1.20
0.40
P
SLUDGE
HOLDING
1.60
LIME SLUDGE
1.39
SLUDGE LIQUOR
0.21
SLUDGE CAKE
LANDFILL
VACUUM FILTRATION
6.25
FILTER BACKWASH
CARBON ADSORPTION AND
BREAKPOINT CHLORINATION
MULTI-MEDIA
FILTRATION
124.79
124.79
131.04
CHLORINE
OUT FALL
FLOW SCHEMATIC
LEGEND
MAXIMUM FLOW RATE MGD
PROPOSED 125 MGD
STORMWATER TREATMENT PLANT

FIGURE IV-12

TABLE IV-12

COST ESTIMATE
FOR
125 MGD STORMWATER TREATMENT PLANT

	Construction Cost Millions of Dollars	Amortized Construction Cost Thousands of Dollars Per Year	Amortized Replacement Cost Thousands of Dollars Per Year	Operation and Maintenance Thousands of Dollars Per Year(1)	Total Treatment Cost Thousands of Dollars Per Year(1)
Two Stage Lime Clarification	6.3	372	--	576	948
Multi-Media Filtration	4.5	266	--	267	533
Carbon Adsorption	18.0	1,063	28	438	1,529
Chlorine Contact Tanks	0.2	14	--	--	14
Chlorination Feed System	0.5	30	--	191	221
Sludge Holding	0.2	12	--	17	29
Vacuum Filtration	0.8	47	12	44	103
Recalcination	--	--	--	--	--
Hauling	0.1	4	5	61	70
Landfill	0.9	50	10	246	306
Instrumentation	0.3	18	--	15	33
Land Required (60 acres)	0.1	5	--	--	5
Site Work and Piping	1.2	71	--	100	171
Garage and Shop	0.2	11	--	--	11
Administration and Laboratory Facilities	0.7	39	--	114	153
Outfall	0.2	12	--	--	12
Total Construction Cost	34.2	2,014	55	2,069	4,138
Engineering, Legal, Administration and Contingencies	10.3	608	--	--	608
Total Project Cost	44.5	2,622	55	2,069	4,746

(1) The operation and maintenance cost and total treatment cost in thousands of dollars per year are based on the average yearly flow rate of 36.3 mgd.

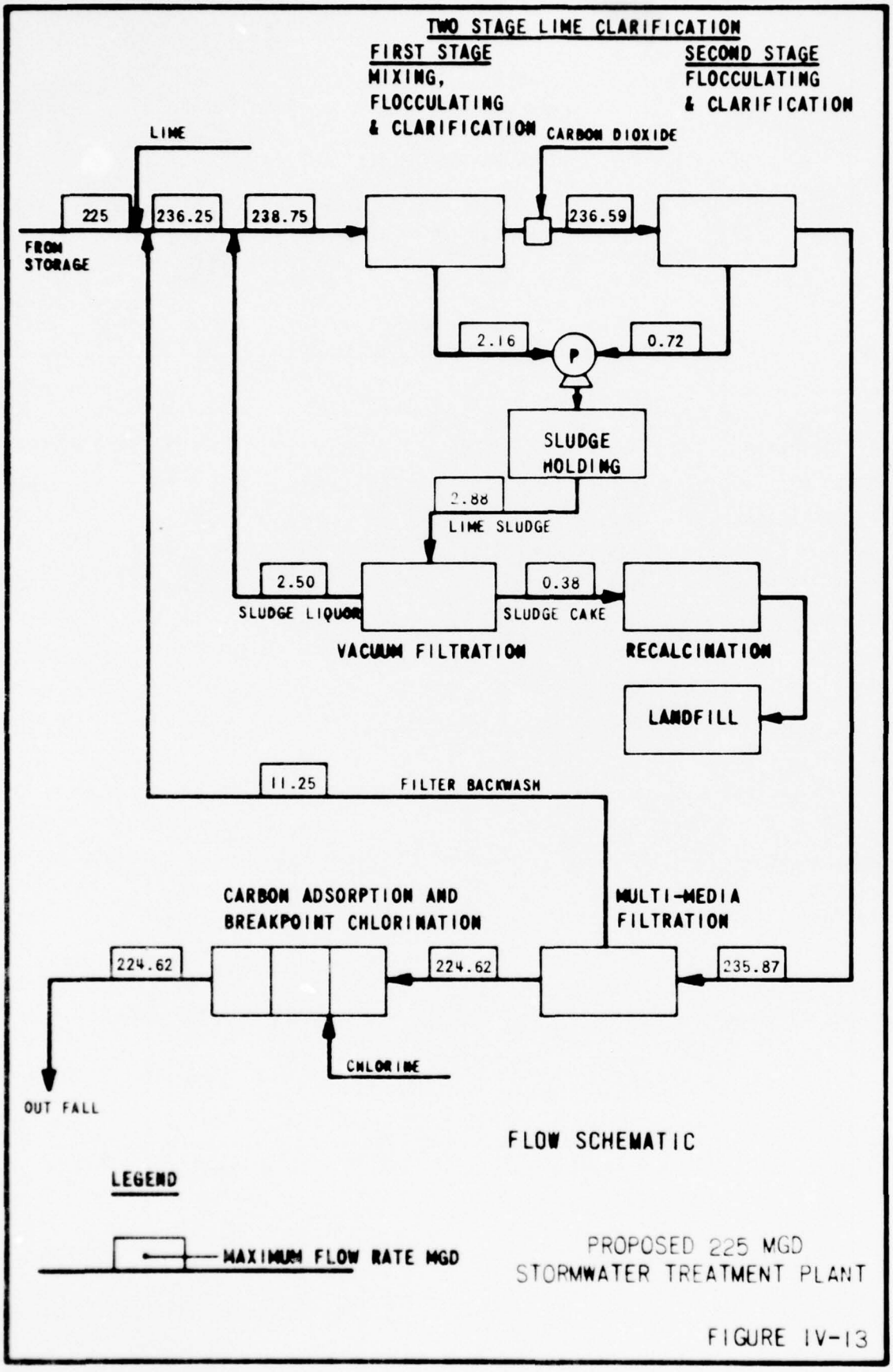
TWO STAGE LIME CLARIFICATION
FIRST STAGE
MIXING,
FLOCCULATING
& CLARIFICATION
SECOND STAGE
FLOCCULATING
& CLARIFICATION
LIME
CARBON DIOXIDE
225
236.25
238.75
236.59
FROM
STORAGE
2.16
P
0.72
SLUDGE
HOLDING
2.88
LIME SLUDGE
2.50
SLUDGE LIQUOR
0.38
SLUDGE CAKE
VACUUM FILTRATION
RECALCINATION
LANDFILL
11.25
FILTER BACKWASH
CARBON ADSORPTION AND
BREAKPOINT CHLORINATION
MULTI-MEDIA
FILTRATION
224.62
224.62
235.87
CHLORINE
OUT FALL
FLOW SCHEMATIC
LEGEND
MAXIMUM FLOW RATE MGD
PROPOSED 225 MGD
STORMWATER TREATMENT PLANT

FIGURE IV-13

TABLE IV-13

COST ESTIMATE
FOR
225 MGD STORMWATER TREATMENT PLANT

	Construction Cost Millions of Dollars	Amortized Construction Cost Thousands of Dollars Per Year	Amortized Replacement Cost Thousands of Dollars Per Year	Operation and Maintenance Thousands of Dollars Per Year(1)	Total Treatment Cost Thousands of Dollars Per Year(1)
Two Stage Lime Clarification	10.6	626	--	983	1,609
Multi-Media Filtration	7.5	443	--	393	836
Carbon Adsorption	30.2	1,784	47	681	2,512
Chlorine Contact Tanks	0.4	24	--	--	24
Chlorination Feed System	0.7	41	--	317	358
Sludge Holding	0.3	18	--	23	41
Vacuum Filtration	1.3	77	20	73	170
Recalcination	1.8	106	28	538	672
Hauling	0.04	2	3	16	21
Landfill	0.2	12	2	61	75
Instrumentation	0.5	30	--	25	55
Land Required (85 acres)	0.1	7	--	--	7
Site Work and Piping	2.1	124	--	156	280
Garage and Shop	0.3	18	--	--	18
Administration and Laboratory Facilities	0.9	53	--	157	210
Outfall	0.1	6	--	--	6
Total Construction Cost	57.0	3,371	100	3,423	6,894
Engineering, Legal, Administration and Contingencies	17.1	1,010	--	--	1,010
Total Project Cost	74.1	4,381	100	3,423	7,904

(1) The operation and maintenance cost and total treatment cost in thousands of dollars per year are based on the average yearly flow rate of 65.3 mgd.

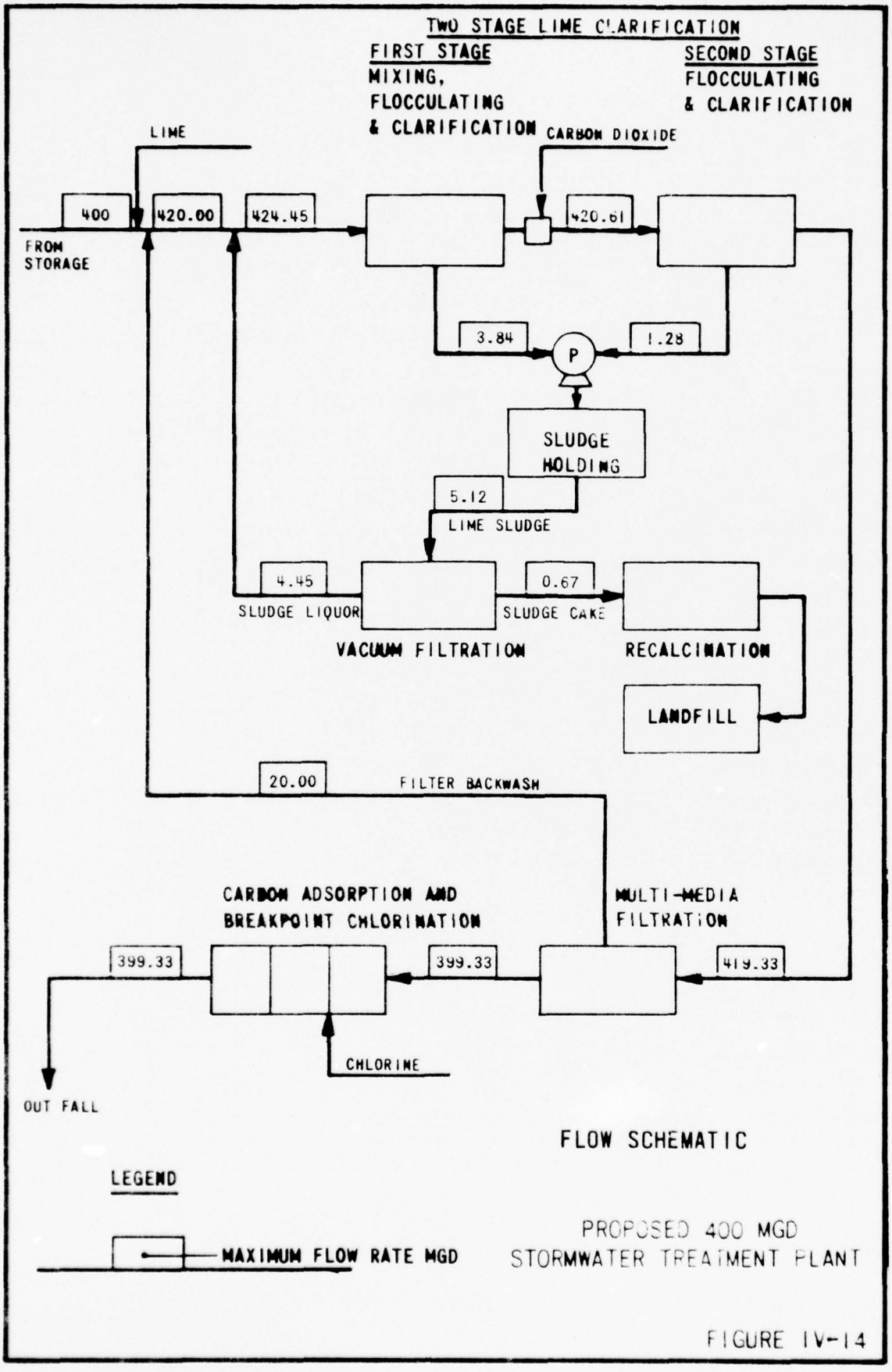
TWO STAGE LIME CLARIFICATION
FIRST STAGE
MIXING,
FLOCCULATING
& CLARIFICATION
SECOND STAGE
FLOCCULATING
& CLARIFICATION
LIME
CARBON DIOXIDE
400
420.00
424.45
420.61
FROM
STORAGE
3.84
P
1.28
SLUDGE
HOLDING
5.12
LIME SLUDGE
4.45
SLUDGE LIQUOR
0.67
SLUDGE CAKE
VACUUM FILTRATION
RECALCINATION
LANDFILL
20.00
FILTER BACKWASH
CARBON ADSORPTION AND
BREAKPOINT CHLORINATION
MULTI-MEDIA
FILTRATION
399.33
399.33
419.33
CHLORINE
OUT FALL
FLOW SCHEMATIC
LEGEND
MAXIMUM FLOW RATE MGD
PROPOSED 400 MGD
STORMWATER TREATMENT PLANT

FIGURE IV-14

TABLE IV-14

COST ESTIMATE
FOR
400 MGD STORMWATER TREATMENT PLANT

	Construction Cost Millions of Dollars	Amortized Construction Cost Thousands of Dollars Per Year	Amortized Replacement Cost Thousands of Dollars Per Year	Operation and Maintenance Thousands of Dollars Per Year(1)	Total Treatment Cost Thousands of Dollars Per Year(1)
Two Stage Lime Clarification	17.7	1,045	--	1,677	2,722
Multi-Media Filtration	13.0	768	--	573	1,341
Carbon Adsorption	51.5	3,042	80	1,071	4,193
Chlorine Contact Tanks	0.7	38	--	--	38
Chlorination Feed System	1.0	59	--	536	595
Sludge Holding	0.4	24	--	34	58
Vacuum Filtration	2.1	124	33	121	278
Recalcination	2.4	142	37	776	955
Hauling	0.04	2	3	19	24
Landfill	0.3	18	3	91	112
Instrumentation	0.8	47	--	40	87
Land Required (125 acres)	0.2	10	--	--	10
Site Work and Piping	3.1	183	--	248	431
Garage and Shop	0.4	24	--	--	24
Administration and Laboratory Facilities	1.3	77	--	220	297
Outfall	1.9	112	--	--	112
Total Construction Cost	96.8	5,715	156	5,406	11,277
Engineering, Legal, Administration and Contingencies	29.0	1,713	--	--	1,713
Total Project Cost	125.8	7,428	156	5,406	12,990

(1) The operation and maintenance cost and total treatment cost in thousands of dollars per year are based on the average yearly flow rate of 116 mgd.

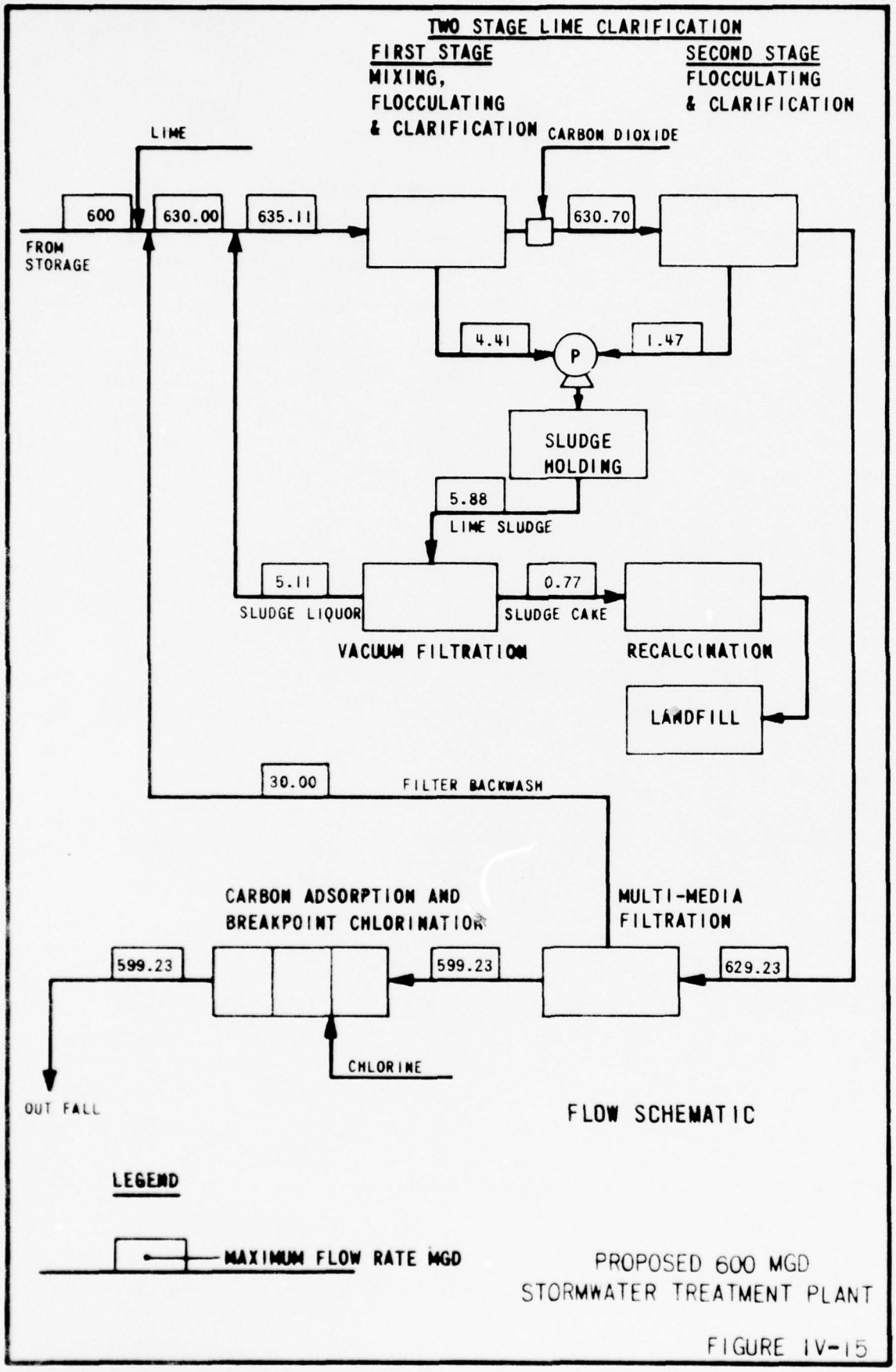
TWO STAGE LIME CLARIFICATION
FIRST STAGE
MIXING,
FLOCCULATING
& CLARIFICATION
SECOND STAGE
FLOCCULATING
& CLARIFICATION
LIME
CARBON DIOXIDE
600
630.00
635.11
630.70
FROM
STORAGE
4.41
1.47
P
SLUDGE
HOLDING
5.88
LIME SLUDGE
5.11
SLUDGE LIQUOR
0.77
SLUDGE CAKE
VACUUM FILTRATION
RECALCINATION
LANDFILL
30.00
FILTER BACKWASH
CARBON ADSORPTION AND
BREAKPOINT CHLORINATION
MULTI-MEDIA
FILTRATION
599.23
599.23
629.23
CHLORINE
OUT FALL
FLOW SCHEMATIC
LEGEND
MAXIMUM FLOW RATE MGD
PROPOSED 600 MGD
STORMWATER TREATMENT PLANT

FIGURE IV-15

TABLE IV-15

COST ESTIMATE
FOR
600 MGD STORMWATER TREATMENT PLANT

	Construction Cost Millions of Dollars	Amortized Construction Cost Thousands of Dollars Per Year	Amortized Replacement Cost Thousands of Dollars Per Year	Operation and Maintenance Thousands of Dollars Per Year(1)	Total Treatment Cost Thousands of Dollars Per Year(1)
Two Stage Lime Clarification	26.0	1,536	--	2,445	3,981
Multi-Media Filtration	19.5	1,152	--	754	1,906
Carbon Adsorption	75.0	4,430	116	1,537	6,083
Chlorine Contact Tanks	0.9	53	--	--	53
Chlorination Feed System	2.5	148	--	1,670	1,818
Sludge Holding	0.5	30	--	36	66
Vacuum Filtration	2.3	136	36	137	309
Recalcination	2.9	171	45	1,060	1,276
Hauling	0.1	6	7	43	56
Landfill	0.3	18	3	107	128
Instrumentation	1.0	59	--	50	109
Land Required (160 acres)	0.2	13	--	--	13
Site Work and Piping	4.6	272	--	350	622
Garage and Shop	0.5	32	--	--	32
Administration and Laboratory Facilities	1.7	100	--	273	373
Outfall	0.4	24	--	--	24
Total Construction Cost	138.4	8,180	207	8,462	16,849
Engineering, Legal, Administration and Contingencies	41.5	2,451	--	--	2,451
Total Project Cost	179.9	10,631	207	8,462	19,300

(1) The operation and maintenance cost and total treatment cost in thousands of dollars per year are based on the average yearly flow rate of 174 mgd.

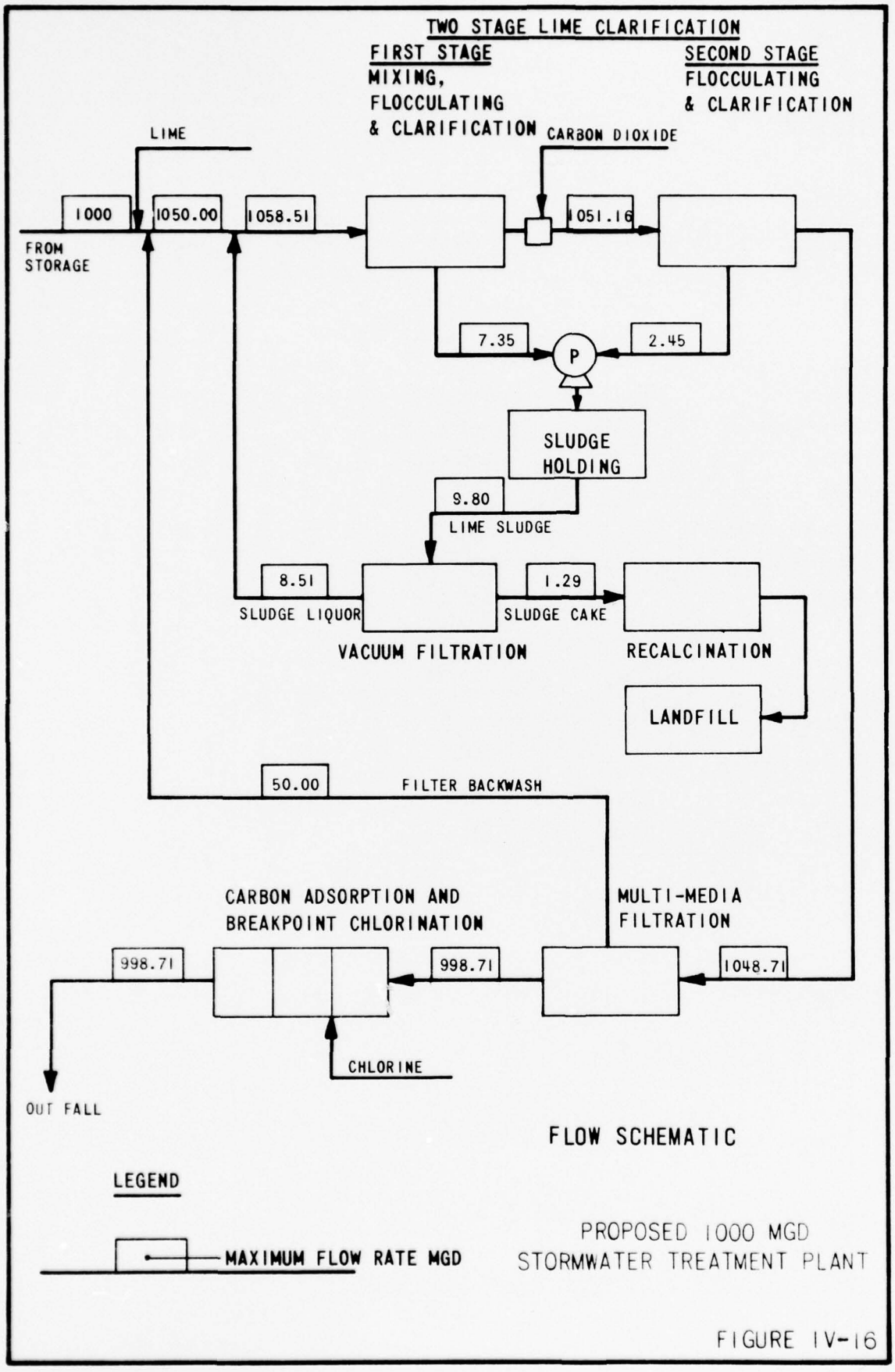
TWO STAGE LIME CLARIFICATION
FIRST STAGE
MIXING,
FLOCCULATING
& CLARIFICATION
SECOND STAGE
FLOCCULATING
& CLARIFICATION
LIME
CARBON DIOXIDE
1000
1050.00
1058.51
1051.16
FROM
STORAGE
7.35
P
2.45
SLUDGE
HOLDING
9.80
LIME SLUDGE
8.51
SLUDGE LIQUOR
1.29
SLUDGE CAKE
VACUUM FILTRATION
RECALCINATION
LANDFILL
50.00
FILTER BACKWASH
CARBON ADSORPTION AND
BREAKPOINT CHLORINATION
MULTI-MEDIA
FILTRATION
998.71
998.71
1048.71
CHLORINE
OUT FALL
FLOW SCHEMATIC
LEGEND
MAXIMUM FLOW RATE MGD
PROPOSED 1000 MGD
STORMWATER TREATMENT PLANT

FIGURE IV-16

TABLE IV-16

COST ESTIMATE
FOR
1,000 MGD STORMWATER TREATMENT PLANT

	Construction Cost Millions of Dollars	Amortized Construction Cost Thousands of Dollars Per Year	Amortized Replacement Cost Thousands of Dollars Per Year	Operation and Maintenance Thousands of Dollars Per Year(1)	Total Treatment Cost Thousands of Dollars Per Year(1)
Two Stage Lime Clarification	42.0	2,481	--	3,959	6,440
Multi-Media Filtration	33.0	1,949	--	1,071	3,020
Carbon Adsorption	122.0	7,205	189	2,387	9,781
Chlorine Contact Tanks	1.4	83	--	--	83
Chlorination Feed System	3.6	213	--	2,783	2,996
Sludge Holding	0.7	41	--	53	94
Vacuum Filtration	3.7	219	57	219	495
Recalcination	3.7	219	57	1,710	1,986
Hauling	0.1	6	7	40	53
Landfill	0.5	30	6	149	185
Instrumentation	1.3	77	--	65	142
Land Required (220 acres)	0.3	18	--	--	18
Site Work and Piping	6.3	372	--	548	920
Garage and Shop	0.8	47	--	--	47
Administration and Laboratory Facilities	2.3	136	--	370	506
Outfall	2.3	136	--	--	136
Total Construction Cost	224.0	13,232	316	13,354	26,902
Engineering, Legal, Administration and Contingencies	67.2	3,970	--	--	3,970
Total Project Cost	291.2	17,202	316	13,354	30,872

(1) The operation and maintenance cost and total treatment cost in thousands of dollars per year are based on the average yearly flow rate of 290 mgd.

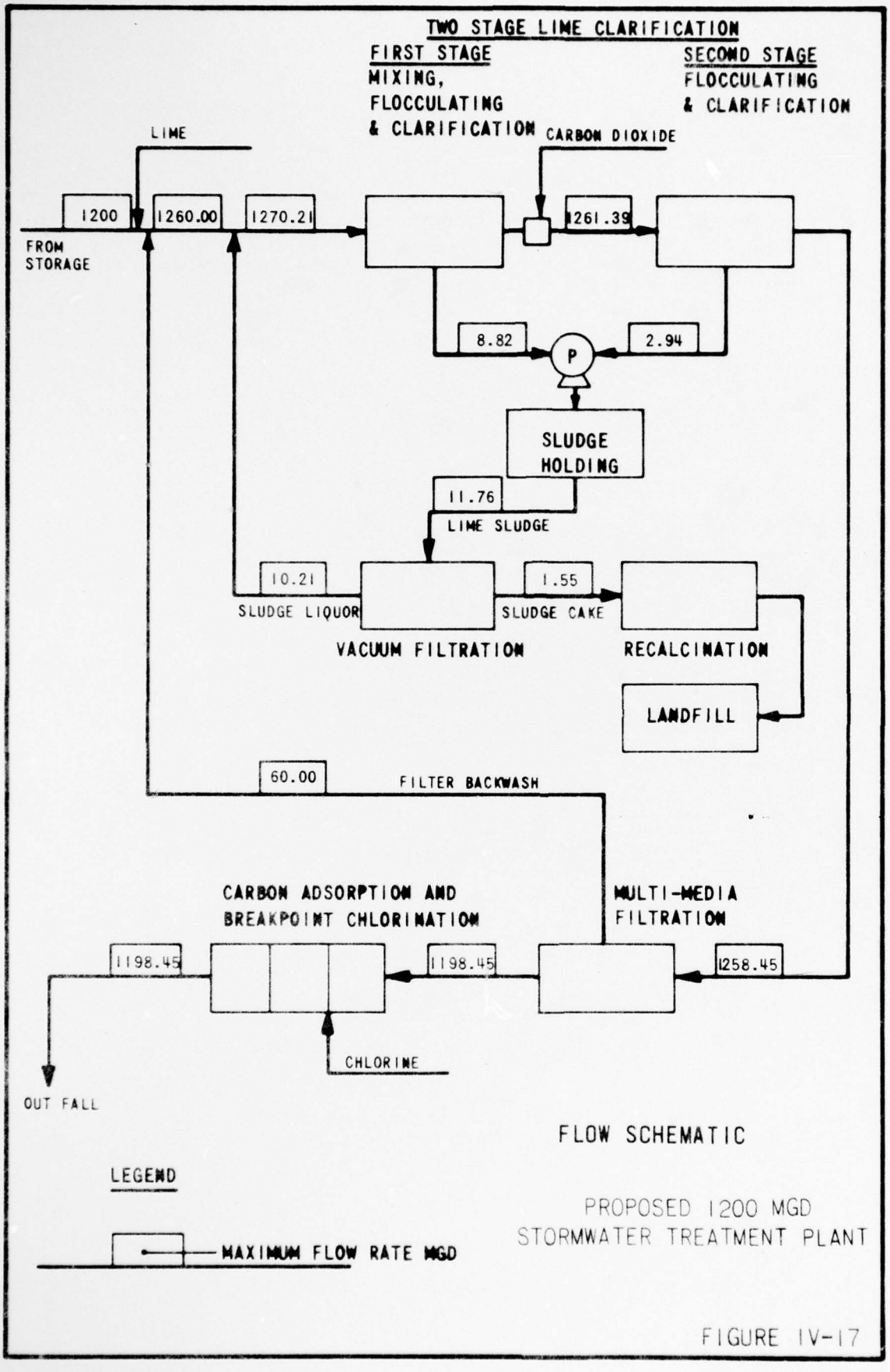
TWO STAGE LIME CLARIFICATION
FIRST STAGE
MIXING,
FLOCCULATING
& CLARIFICATION
SECOND STAGE
FLOCCULATING
& CLARIFICATION
LIME
CARBON DIOXIDE
1200
1260.00
1270.21
1261.39
FROM
STORAGE
8.82
P
2.94
SLUDGE
HOLDING
11.76
LIME SLUDGE
10.21
SLUDGE LIQUOR
1.55
SLUDGE CAKE
VACUUM FILTRATION
RECALCINATION
LANDFILL
60.00
FILTER BACKWASH
CARBON ADSORPTION AND
BREAKPOINT CHLORINATION
MULTI-MEDIA
FILTRATION
1198.45
1198.45
1258.45
CHLORINE
OUT FALL
FLOW SCHEMATIC
LEGEND
MAXIMUM FLOW RATE MGD
PROPOSED 1200 MGD
STORMWATER TREATMENT PLANT

FIGURE IV-17

TABLE IV-17

COST ESTIMATE
FOR
1,200 MGD STORMWATER TREATMENT PLANT

	Construction Cost Millions of Dollars	Amortized Construction Cost Thousands of Dollars Per Year	Amortized Replacement Cost Thousands of Dollars Per Year	Operation and Maintenance Thousands of Dollars Per Year(1)	Total Treatment Cost Thousands of Dollars Per Year(1)
Two Stage Lime Clarification	50.2	2,965	--	4,751	7,716
Multi-Media Filtration	40.0	2,362	--	1,244	3,606
Carbon Adsorption	144.0	8,505	223	2,753	11,481
Chlorine Contact Tanks	1.7	100	--	--	100
Chlorination Feed System	4.2	248	--	3,269	3,517
Sludge Holding	0.8	46	--	60	106
Vacuum Filtration	4.3	254	67	256	577
Recalcination	4.2	248	65	2,050	2,363
Hauling	0.1	6	7	86	99
Landfill	0.5	30	6	168	204
Instrumentation	1.5	86	--	75	161
Land Required (250 acres)	0.3	20	--	--	20
Site Work and Piping	7.5	443	--	613	1,056
Garage and Shop	0.9	54	--	--	54
Administration and Laboratory Facilities	2.6	154	--	406	560
Outfall	0.7	41	--	--	41
Total Construction Cost	263.5	15,562	368	15,731	31,661
Engineering, Legal, Administration and Contingencies	79.1	4,672	--	--	4,672
Total Project Cost	342.6	20,234	368	15,731	36,333

(1) The operation and maintenance cost and total treatment cost in thousands of dollars per year are based on the average yearly flow rate of 348 mgd.

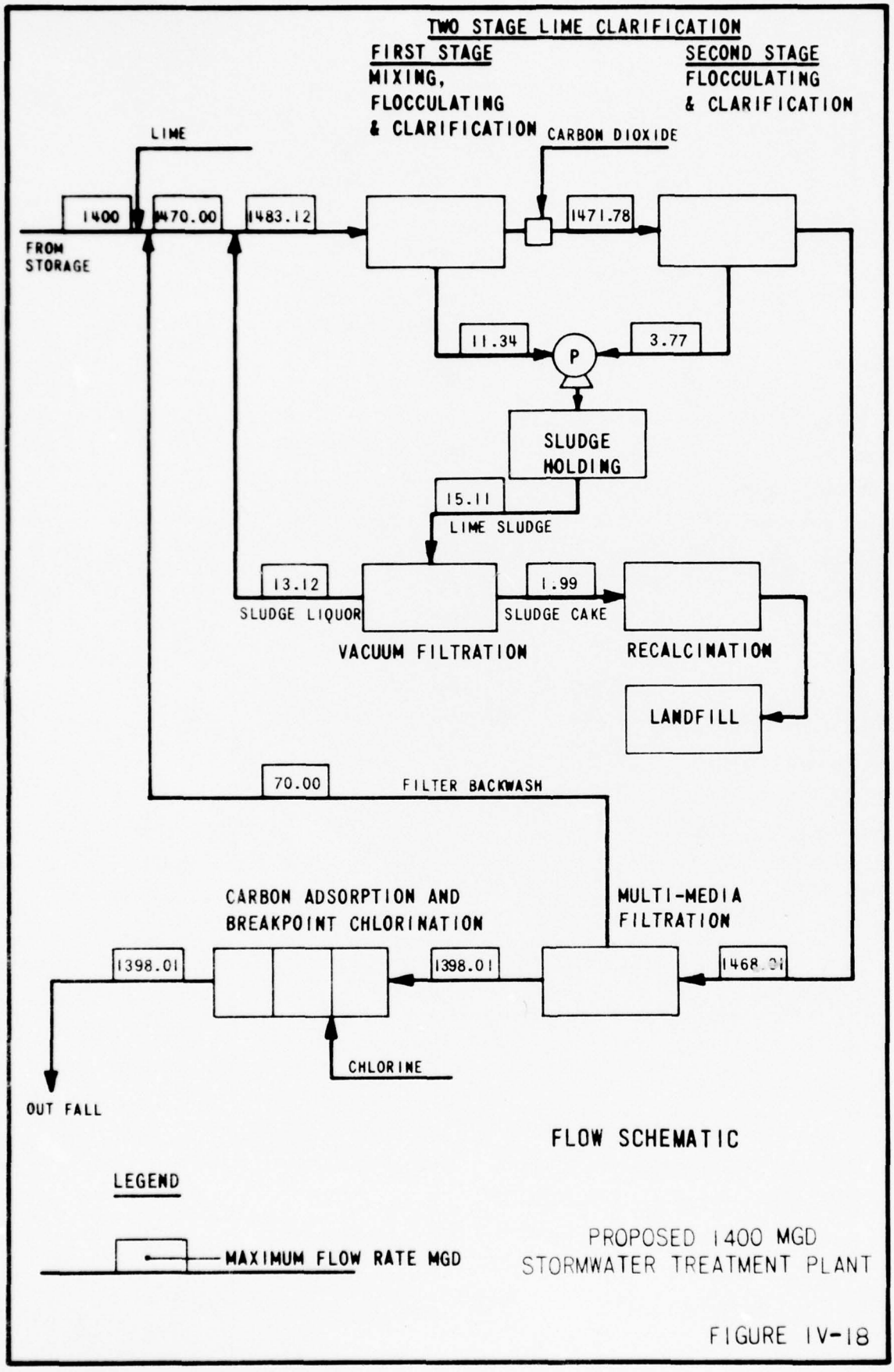
TWO STAGE LIME CLARIFICATION
FIRST STAGE
MIXING,
FLOCCULATING
& CLARIFICATION
SECOND STAGE
FLOCCULATING
& CLARIFICATION
LIME
CARBON DIOXIDE
1400
1470.00
1483.12
1471.78
FROM
STORAGE
11.34
3.77
P
SLUDGE
HOLDING
15.11
LIME SLUDGE
13.12
SLUDGE LIQUOR
1.99
SLUDGE CAKE
VACUUM FILTRATION
RECALCINATION
LANDFILL
70.00
FILTER BACKWASH
CARBON ADSORPTION AND
BREAKPOINT CHLORINATION
MULTI-MEDIA
FILTRATION
1398.01
1398.01
1468.01
CHLORINE
OUT FALL
FLOW SCHEMATIC
LEGEND
MAXIMUM FLOW RATE MGD
PROPOSED 1400 MGD
STORMWATER TREATMENT PLANT

FIGURE IV-18

TABLE IV-18

COST ESTIMATE
FOR
1,400 MGD STORMWATER TREATMENT PLANT

	Construction Cost Millions of Dollars	Amortized Construction Cost Thousands of Dollars Per Year	Amortized Replacement Cost Thousands of Dollars Per Year	Operation and Maintenance Thousands of Dollars Per Year(1)	Total Treatment Cost Thousands of Dollars Per Year(1)
Two Stage Lime Clarification	59.0	3,485	--	5,461	8,946
Multi-Media Filtration	44.0	2,599	--	1,386	3,985
Carbon Adsorption	165.0	9,745	256	3,113	13,114
Chlorine Contact Tanks	1.9	112	--	--	112
Chlorination Feed System	3.4	201	--	2,510	2,711
Sludge Holding	0.9	56	--	74	130
Vacuum Filtration	5.5	325	85	323	733
Recalcination	4.7	278	73	2,320	2,671
Hauling	0.1	6	7	48	61
Landfill	0.6	35	7	194	236
Instrumentation	1.4	83	--	70	153
Land Required (275 acres)	0.4	22	--	--	22
Site Work and Piping	8.6	508	--	664	1,172
Garage and Shop	1.0	59	--	--	59
Administration and Laboratory Facilities	2.8	165	--	445	610
Outfall	2.8	165	--	--	165
Total Construction Cost	302.1	17,844	428	16,608	34,880
Engineering, Legal, Administration and Contingencies	90.6	5,351	--	--	5,351
Total Project Cost	392.7	23,195	428	16,608	40,231

(1) The operation and maintenance cost and total treatment cost in thousands of dollars per year are based on the average yearly flow rate of 406 mgd.

Independent Physical Chemical Treatment

Initial Investigations Since the selection of independent physical-chemical treatment at a certain location would require either totally new construction or extensive change-over work at existing facilities, design of specific plants was not done at this stage of the study. Rather, four plants were designed at capacities ranging from 10 mgd to 1250 mgd. Preliminary cost estimates were made and a graphical plot was made of cost vs. treatment capacity. Thus, in a plan formulation process a plant of any size over the range studied could be investigated.

Of major concern was selection of a process scheme which could achieve the high degree of treatment desired with a high degree of reliability. Toward that end many treatment processes were evaluated including: chemical clarification with lime, alum, iron salts, aluminum salts, and organic polymers; activated carbon adsorption (powdered and granular), ion exchange, breakpoint chlorination, reverse osmosis, electro dialysis, distillation; freezing, ammonia stripping, and several screening and filtratin processes. Sludge handling processes investigated included: incineration, filtration, chemical conditioning, centrifugation, wet air oxidation, thermal conditioning, land spreading and landfill.

The process scheme selected is illustrated in Figure IV-19. Generally it consists of screening, grit removal, two-stage lime clarification, activated carbon adsorption, breakpoint chlorination, dechlorination, filtration, adsorption, lime sludge incineration-recalcination, and thermal carbon regeneration. The estimated residual concentrations for critical constituents are summarized below.

BOD	2-5 mg/l
COD	5-12 mg/l
Suspended Solids	2-4 mg/l
Phosphorus	0.05-0.20 mg/l
NH 3-N	0.1-0.5 mg/l
NO 2 & NO 3-N	1-2 mg/l
Oil & Grease	1.0 mg/l
Phenols	.01 mg/l

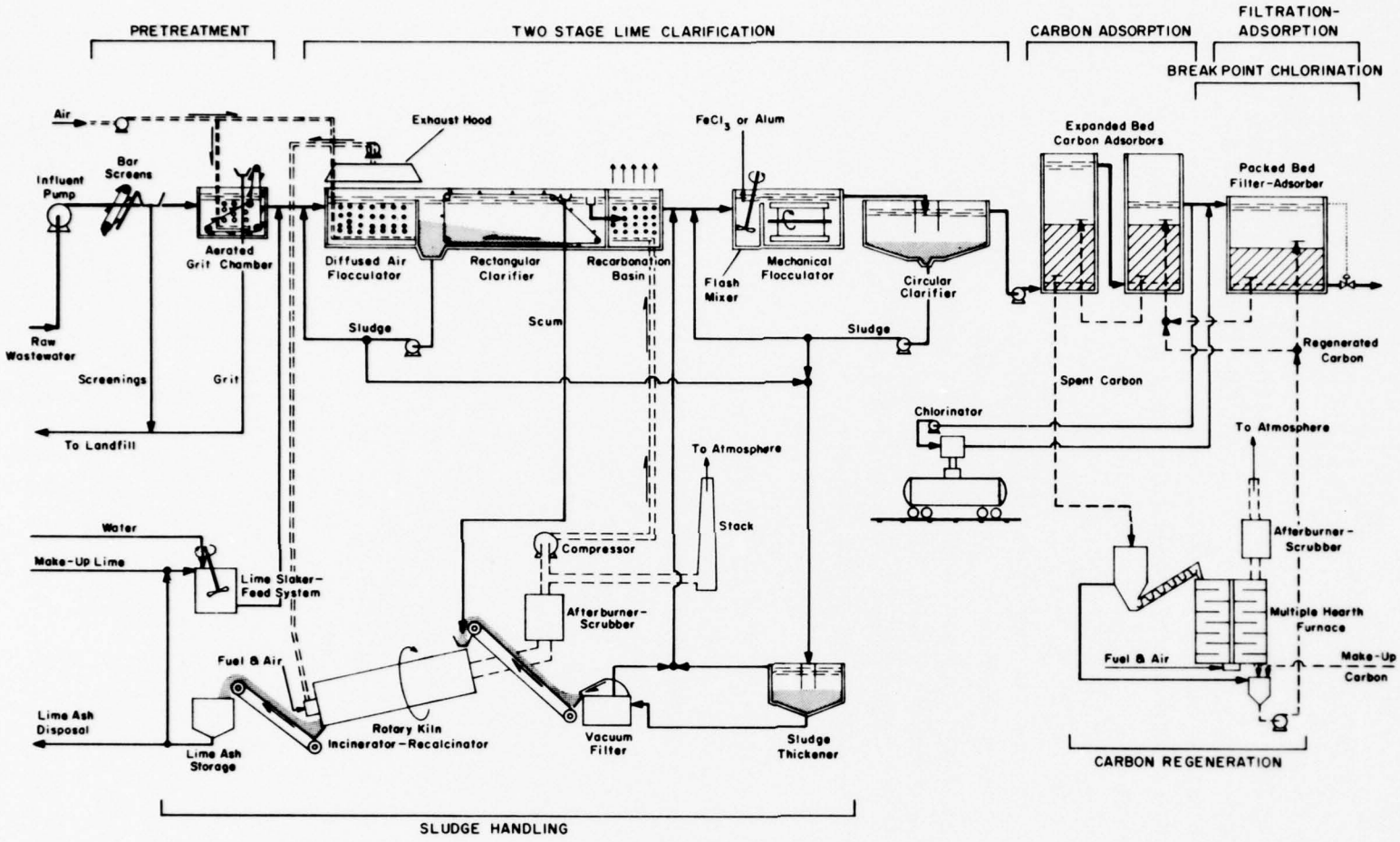

INITIAL PROCESS SCHEME
INDEPENDENT PHYSICAL-CHEMICAL TREATMENT

FIGURE IV-19

Pretreatment processes are standard to all wastewater treatment plants. In the screening and grit removal processes, coarse and fast settling material are removed. These processes are standard to all wastewater treatment plants. A detailed discussion of the design and process selection can be found in the specialty Appendix Design of Independent Physical Chemical Treatment Plants.

Chemical Clarification in the form of two-stage lime clarification is proposed for suspended solids, phosphorus and heavy metal removal. Suspended solids and phosphorus removals of 95 percent can be expected in this process. In addition BOD and COD reductions of 80 percent should be realized. The high pH attained in the first stage results in the hydrolysis of many metal ions. Some of those metals not removed in the first stage can be removed at lower pH in the second stage.

Granular activated carbon would adsorb most dissolved organic materials not removed in previous processes. Adsorption would be employed both before and after breakpoint chlorination. The final adsorption process would utilize primarily virgin carbon and should retain most materials not removed in the first stage. Also first stage adsorption would be carried out at a pH of 9.5 while the final adsorption process would be carried out at a pH of 6.0 - 7.0. Activated carbon is also effective in removing some metal ions not affected by chemical clarification.

Breakpoint Chlorination results in total oxidation of ammonia nitrogen to nitrogen gas. The final concentration is totally a function of the chlorine dosage. At a chlorine to nitrogen ratio of 9:1, the concentrations indicated previously can be achieved. Chlorination to the breakpoint also results in a high efficiency of disinfection. Dechlorination is necessary following this process and that can best be achieved by use of activated carbon.

Filtration is employed as the final process to insure removal of any suspended solids carried over from preceeding processes. To obtain economy of design, the final carbon adsorption can be designed as a packed bed thus allowing it to serve the function of adsorptions, filtration, and dechlorination.

Sludge handling and treatment consisted of lime sludge from the chemical clarification process being thickened, either vacuum filtered or centrifuged, then incinerated. During incineration, calcium carbonate precipitated during lime clarification will be recalcined to lime. Up to 50 percent lime reclaimation of lime is expected if a lime dosage of 300 mg/l is used. Incineration ash, grit and screenings will be disposed of in a landfill. The lime rich ash has a reuse potential as a construction fill material.

Detailed Investiation Based on the preliminary design presented in Phase I, a total of twelve IPCT plants were selected for design in Phase II. Eight of the plants involve totally new construction while the remaining four require conversion of existing facilities. The plants are listed below

Location	Flow
Port Huron	24 MGD
East China	8 MGD, 12 MGD, 36 MGD
Algonac	4 MGD
Detroit	806 MGD
Wyandotte	125 MGD
Huron River	400 MGD, 525 MGD, 1271 MGD
Monroe	40 MGD
Adrian	22.5 MGD (Maximum)

It was found that the original cost estimates developed in Phase I were well below cost estimates prepared for similar unit processes by Stanley Consultants, Inc. It was decided that in order to insure consistency, the costs developed by Stanley Consultants would be used as a basis for cost estimation. New cost curves were developed to conform to the different process design criteria specified for the IPCT plants, and appear in the final report on IPCT designs, a specialty appendix to this report.

All construction cost estimates are based on a Detroit Water Quality Office construction cost index of 180.73 for January, 1972. For comparative purposes and to develop annual costs, construction estimates have been amortized over a period of 50 years at an interest rate of 5-1/2 percent. For unit processes which have a useful life of less than 50 years, an amortized replacement cost has been calculated based on replacing units at 1972 costs. This cost has been spread over the 50 year life of the project at the 5-1/2 percent interest rate.

Operation and maintenance cost estimates are based on a labor cost of six dollars per hour, and on power, fuel, replacement parts, and chemicals at January, 1972, price levels. The estimated cost should be sufficient to operate and maintain the equipment for its useful life.

The treatment scheme presented in Phase I was adopted for Phase II design with little change. One change of significance was that a mechanical flocculator was substituted for the diffuser in flocculator in the first stage. This was necessary since it was found that the practice of burning ammonia laden gases collected from the flocculator could result in a ten fold increaese in nitrous oxide emissions from the sludge incineration process. Another change involved maintaining separation of first and second stage sludges when recalcination is to be practiced. Although this would tend to increase fuel consumption in the recalcinaton process, the yield of reusable lime would be increased. This would be true only for low alkalinity wastewater.

The following discussion presents the twelve treatment plant designs and a detailed estimate of construction, operation and maintenance costs associated with each plant.

Port Huron(24 mgd) The plant proposed for Port Huron would make extensive use of existing facilities. The plant schematic is shown in figure IV-20. Pumping, preliminary treatment, and flow equalization facilities are sufficient for the proposed design. Both primary and secondary clarifiers can be utilized for the lime clarification process and aeration tanks could be converted to mixing and flocculation basins. Some additional flocculation and clarification facilities would be necessary. Existing sludge thickening, holding and dewatering facilities should also be sufficient for independent physical-chemical treatment. Existing incineration facilities should be sufficient to accomodate first stage sludges; however, additional facilities would be required if second-stage sludge recalcination were to be employed. Other new facilities would include the activated carbon adsorption and breakpoint chlorination facilities.

East China 8 mgd, 12 mgd, and 36 mgd) three designs have been developed for the site at East China. All three would be completed new facilities. Plant schematics are shown in figure IV-21, 22 and 23.

Wastewater would be treated in the same manner as discussed previously. Sludge from both the 8 and 12 mgd plants would be mixed, dewatered on a single set of vacuum filters and incinerated in a single unit. First and second stage sludges from the 36 mgd plant will be kept separate and incinerated or recalcined in one of two identical furnaces. Lime would be recovered in all three processes, however, the sludge separation in the larger plant should allow a greater percentage of lime recovery.

Detroit (806 mgd) The plant proposed for Detroit would be located at the site of the present plant and would make extensive use of existing facilities. Figure IV-24 shows the schematic for the proposed plant.

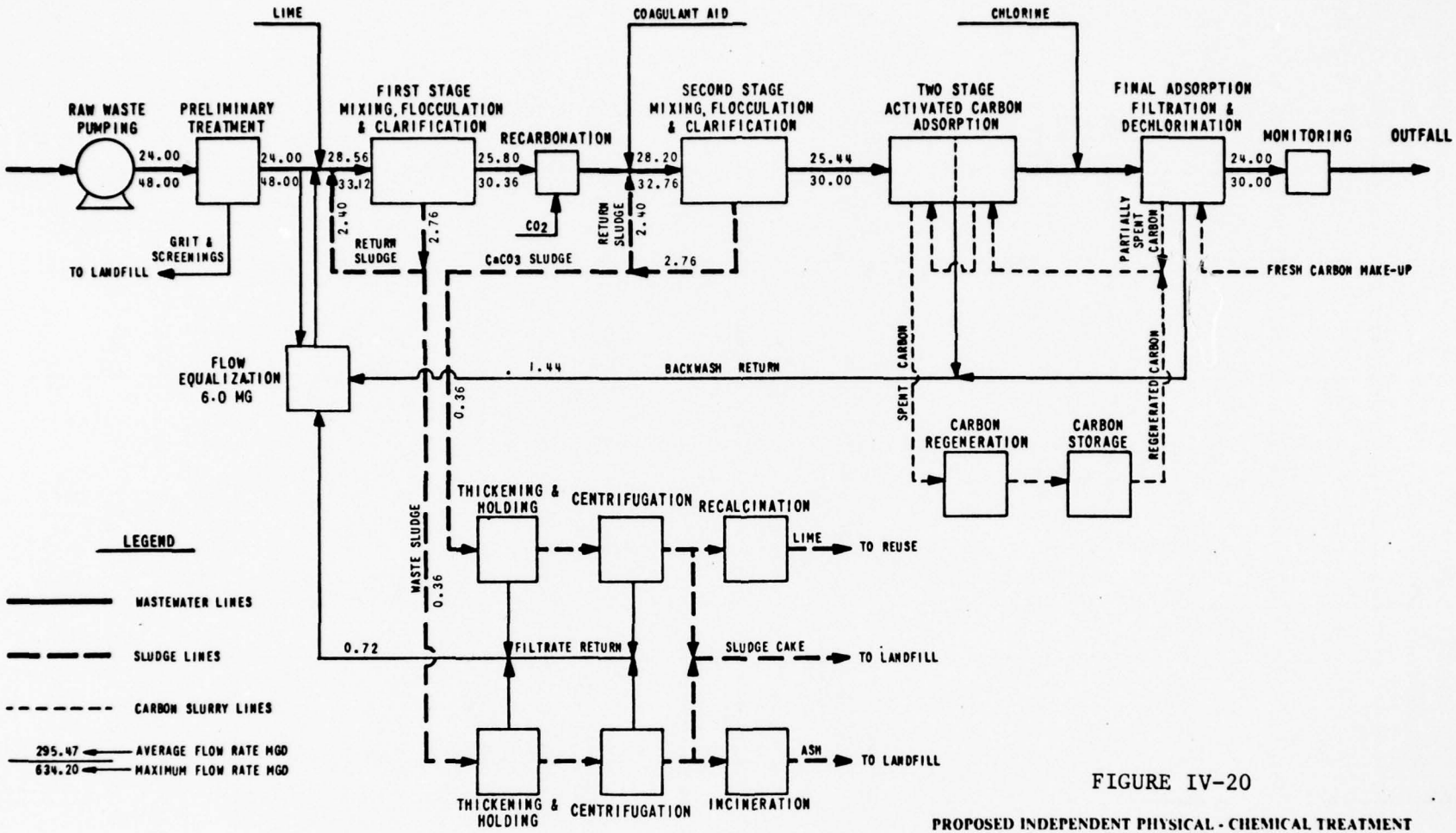

FIGURE IV-20

PROPOSED INDEPENDENT PHYSICAL - CHEMICAL TREATMENT PLANT FOR PORT HURON - 24 MGD

TABLE IV - 19

COST ESTIMATE

FOR

PORT HURON INDEPENDENT PHYSICAL-CHEMICAL TREATMENT PLANT

24 MGD

	Construction Cost Thousand Dollars	Amortized Construction Cost Thousand Dollars	Amortized Replacement Cost Thousand Dollars	Annual Operation and Maintenance Thousand Dollars	Total Annual Treatment Cost Thousand Dollars
Raw Waste Pumping	-	-	-	29	29
Pretreatment	-	-	-	42	42
Flow Equalization	-	-	-	5	5
Two-Stage Lime Clarification	700	41	-	473	514
Activated Carbon Adsorption	5,100	301	32	210	543
Chlorination System	640	38	-	425	463
Sludge Thickening	-	-	-	21	21
Centrifugation	-	-	15	43	58
Recalcination - Incineration	1,310	77	90	135	302
Land Aquisition	-	-	-	-	-
Site Work & Piping	300	18	-	33	51
Garage & Shop	30	2	-	-	2
Administration Bldg. & Laboratory	210	12	-	45	57
Instrumentation	80	5	-	5	10
Outfall	-	-	-	-	-
Total Construction Cost	8,370	494			
Engineering, Administration, Legal & Contingencies	2,510	148			148
Total Project Cost	10,930	642	137	1,466	2,245

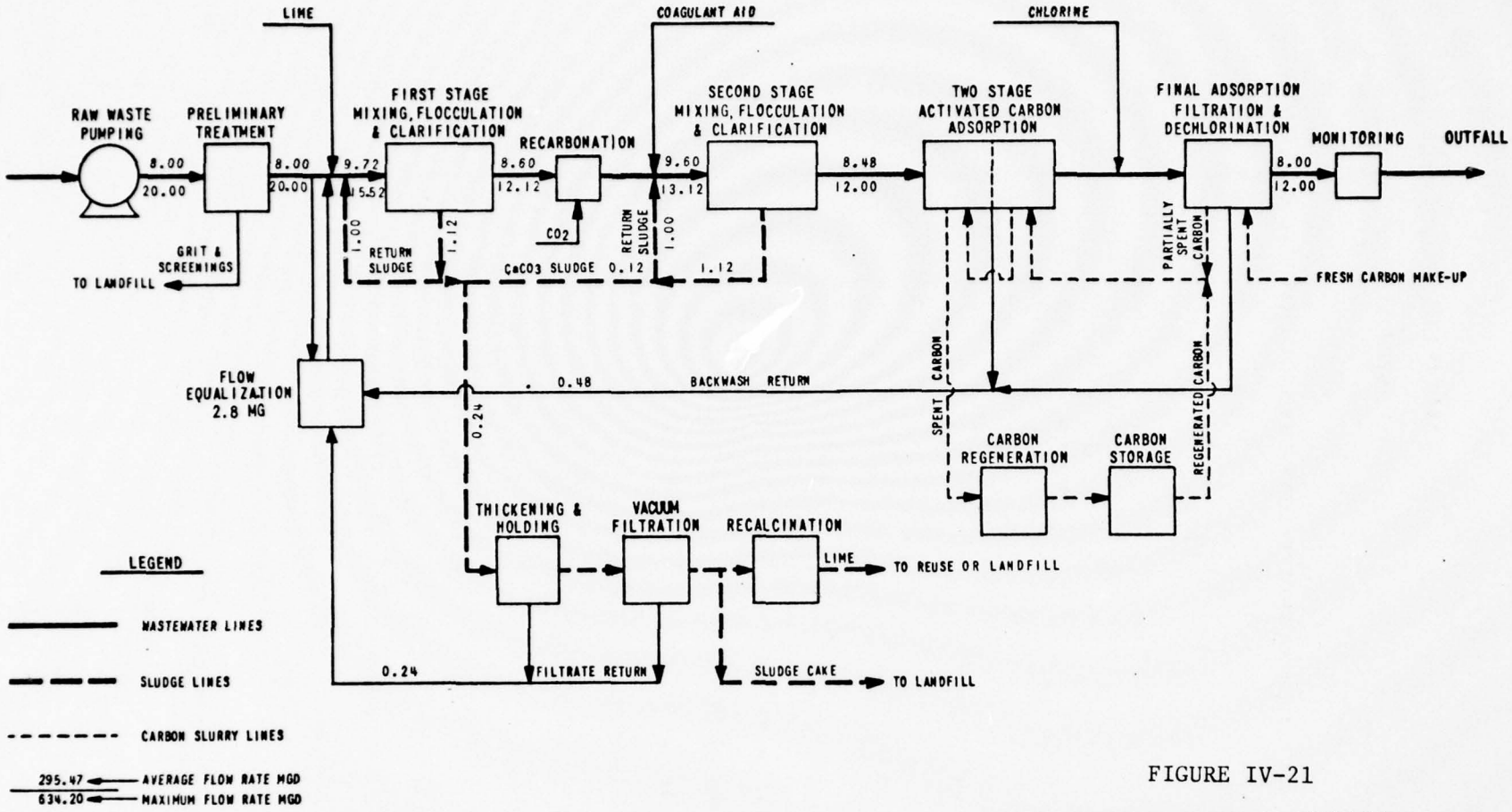

FIGURE IV-21

PROPOSED INDEPENDENT PHYSICAL - CHEMICAL TREATMENT PLANT FOR EAST CHINA - 8 MGD

TABLE IV - 20

COST ESTIMATE

FOR

EAST CHINA INDEPENDENT PHYSICAL-CHEMICAL TREATMENT PLANT

8 MGD

	Construction Cost Thousand Dollars	Amortized Construction Cost Thousand Dollars	Amortized Replacement Cost Thousand Dollars	Annual Operation and Maintenance Thousand Dollars	Total Annual Treatment Cost Thousand Dollars
Raw Waste Pumping	580	34	-	14	48
Pretreatment	140	8	-	18	26
Flow Equalization	580	34	-	3	37
Two-Stage Lime Clarification	1,050	62	-	183	245
Activated Carbon Adsorption	2,550	151	16	87	254
Chlorination System	350	21	-	163	184
Sludge Thickening	180	11	-	9	20
Vacuum Filtration	230	14	8	25	47
Recalcination - Incineration*	1,300	77	45	88	210
Land Aquisition (9 Acres)	50	3	-	-	3
Site Work & Piping	240	14	-	20	34
Garage & Shop	20	1	-	-	1
Administration Bldg. & Laboratory	170	10	-	29	39
Instrumentation	60	4	-	5	9
Outfall	100	6	-	-	6
Total Construction Cost	7,600	450			
Engineering, Administration, Legal & Contingencies	2,280	135			
Total Project Cost	9,880	585	69	644	1,298

*Cost include cost of recalcining sludge from the Algonac IPCT plant

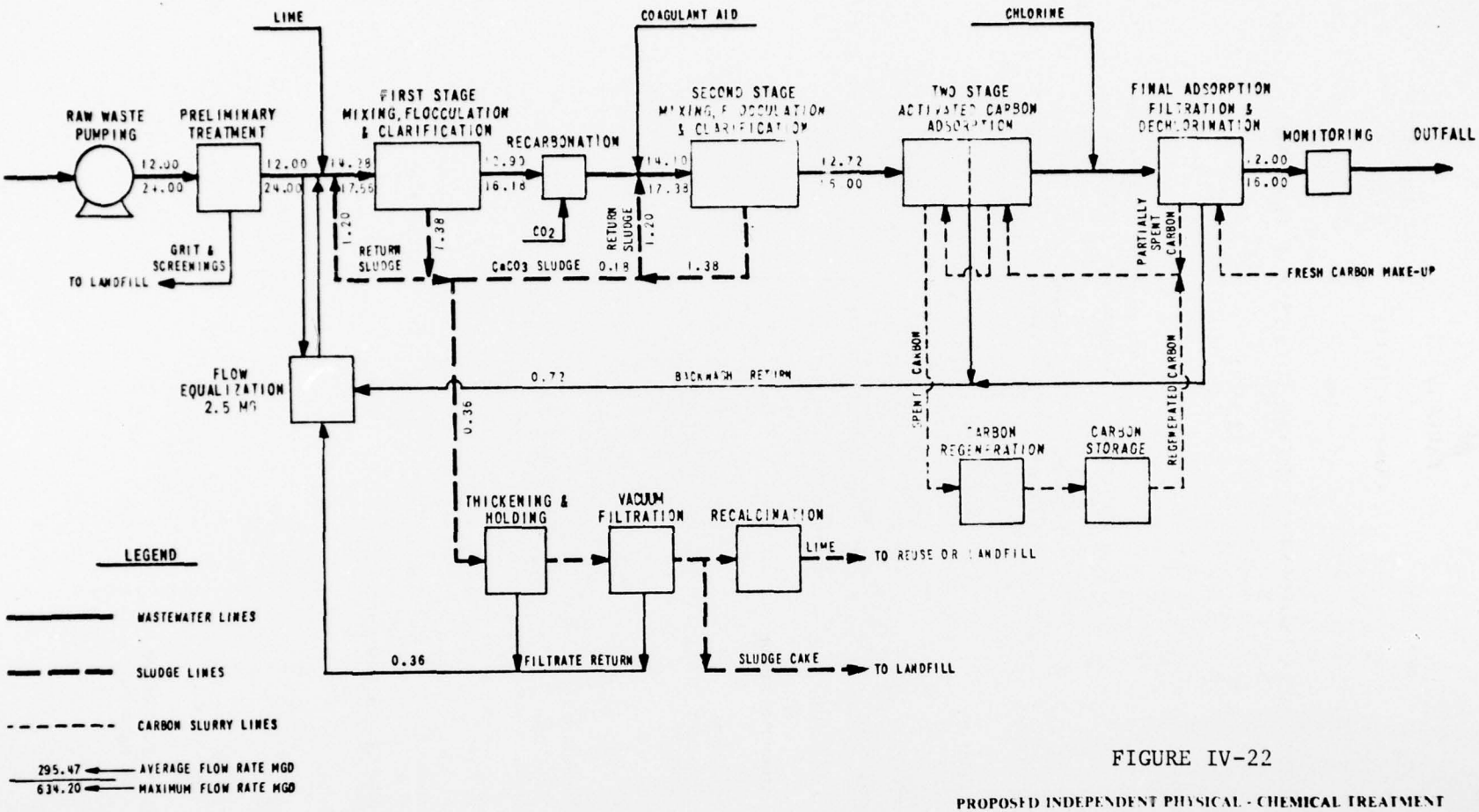

FIGURE IV-22

PROPOSED INDEPENDENT PHYSICAL - CHEMICAL TREATMENT PLANT FOR EAST CHINA - 12 MGD

TABLE IV - 21

COST ESTIMATE

FOR

EAST CHINA INDEPENDENT PHYSICAL-CHEMICAL TREATMENT PLANT

12 MGD

	Construction Cost Thousand Dollars	Amortized Construction Cost Thousand Dollars	Amortized Replacement Cost Thousand Dollars	Annual Operation and Maintenance Thousand Dollars	Total Annual Treatment Cost Thousand Dollars
Raw Waste Pumping	680	40	-	18	58
Pretreatment	160	9	-	25	34
Flow Equalization	590	35	-	3	38
Two-Stage Lime Clarification	1,280	76	-	264	340
Activated Carbon Adsorption	3,070	181	20	122	323
Chlorination System	440	26	-	385	411
Sludge Thickening	230	14	-	13	27
Vacuum Filtration	280	16	9	31	56
Recalcination - Incineration	1,300	77	45	88	210
Land Aquisition (10 Acres)	50	3	-	-	3
Site Work & Piping	280	17	-	24	41
Garage & Shop	30	2	-	-	2
Administration Bldg. & Laboratory	200	12	-	35	47
Instrumentation	60	4	-	5	9
Outfall	100	6	-	-	6
Total Construction Cost	8,750	518			
Engineering, Administration, Legal & Contingencies	2,620	155			155
Total Project Cost	11,370	673	74	1,013	1,760

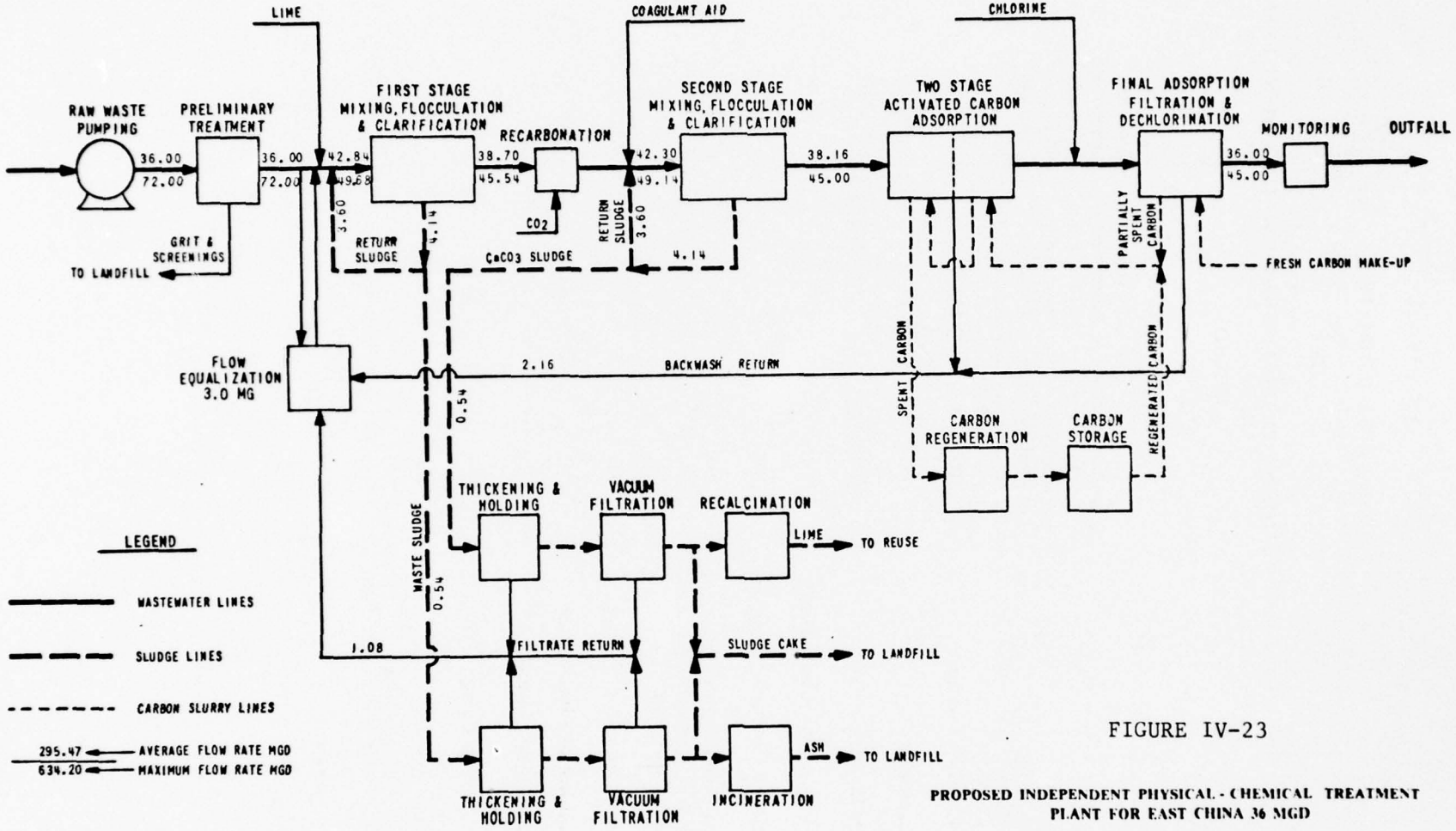

FIGURE IV-23

PROPOSED INDEPENDENT PHYSICAL - CHEMICAL TREATMENT PLANT FOR EAST CHINA 36 MGD

TABLE IV - 22

COST ESTIMATE

FOR

EAST CHINA INDEPENDENT PHYSICAL-CHEMICAL TREATMENT PLANT

36 MGD

	Construction Cost Thousand Dollars	Amortized Construction Cost Thousand Dollars	Amortized Replacement Cost Thousand Dollars	Annual Operation and Maintenance Thousand Dollars	Total Annual Treatment Cost Thousand Dollars
Raw Waste Pumping	1,700	100	-	41	141
Pretreatment	300	18	-	58	76
Flow Equalization	600	35	-	5	40
Two-Stage Lime Clarification	3,000	117	-	717	834
Activated Carbon Adsorption	7,300	431	47	306	784
Chlorination System	200	12	-	849	861
Sludge Thickening	500	30	-	33	63
Vacuum Filtration	500	30	17	58	105
Recalcination - Incineration	2,750	162	95	190	447
Land Aquisition (18 Acres)	90	5	-	-	5
Site Work & Piping	590	35	-	49	84
Garage & Shop	60	4	-	-	4
Administration Bldg. & Laboratory	420	25	-	73	98
Instrumentation	130	8	-	8	16
Outfall	100	6	-	-	6
Total Construction Cost	18,240	1,018			
Engineering, Administration, Legal & Contingencies	5,470	323			323
Total Project Cost	23,710	1,341	159	2,387	3,887

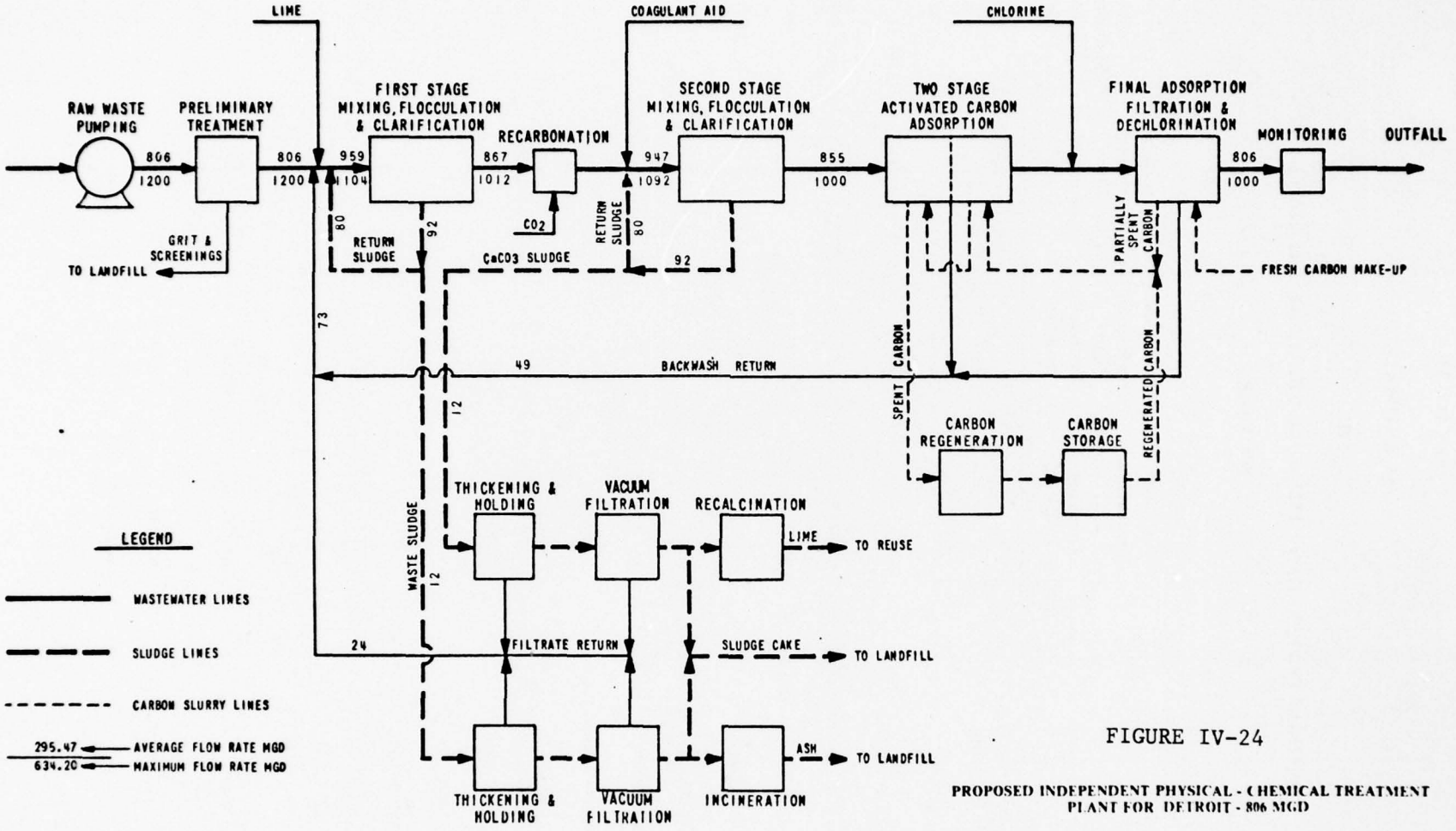

FIGURE IV-24

PROPOSED INDEPENDENT PHYSICAL - CHEMICAL TREATMENT PLANT FOR DETROIT - 806 MGD

TABLE IV - 23

COST ESTIMATE

FOR

DETROIT INDEPENDENT PHYSICAL-CHEMICAL TREATMENT PLANT

806 MGD

	Construction Cost Thousand Dollars	Amortized Construction Cost Thousand Dollars	Amortized Replacement Cost Thousand Dollars	Annual Operation and Maintenance Thousand Dollars	Total Annual Treatment Cost Thousand Dollars
Raw Waste Pumping	-	-	-	788	788
Pretreatment	-	-	-	824	824
Flow Equalization	-	-	-	-	-
Two-Stage Lime Clarification	44,600	2,634	-	12,944	15,578
Activated Carbon Adsorption	128,000	7,560	824	5,693	14,077
Chlorination System	6,000	354	-	11,872	12,226
Sludge Thickening	-	-	-	657	657
Vacuum Filtration	-	-	170	876	1,046
Recalcination - Incineration	18,500	1,093	1,202	3,088	5,383
Land Aquisition	500	30	-	-	30
Site Work & Piping	7,400	437	-	616	1,053
Garage & Shop	700	41	-	-	41
Administration Bldg. & Laboratory	-	-	-	1,068	1,068
Instrumentation	2,000	118	-	98	216
Outfall	-	-	-	-	-
Total Construction Cost	207,700	12,267			
Engineering, Administration, Legal & Contingencies	62,300	3,680			3,680
Total Project Cost	270,000	15,947	2,196	38,524	56,667

Raw watewater pumping and preliminary treatment facilities at the existing plant are of sufficient capacity to handle design flows. Existing clarifiers would make up a large percentage of the total clarification facilities required. New mixing and flocculation facilities would be required or existing aeration basins could be converted. The remaining wastewater treatment facilities would be designed as new units.

Existing sludge thickening, holding and dewatering facilities should be sufficient for IPCT requirement. Sludge incineration and recalcination facilities would require expansion and additional air emission control apparatus.

Wyandotte (125 mgd) The plant proposed for Wyandotte would make extensive use of existing facilities. As can be seen from the plant schematic in Figure IV-25 the processes would not differ from the design discussed earlier. Raw waste pumping and preliminary treatment at the existing plant are sufficient for the proposed design. Supplementation of existing clarifiers and addition of mixing and flocculation equipment would be necessary. The remaining wastewater processing equipment would be new construction.

Sludges from the first and second stages of lime clarification would not be allowed to mix and would be dewatered and either incinerated or recalcined in separate units. Existing sludge thickening and vacuum filtration equipment would have sufficient capacity. An additional furnace would be required for lime recalcination.

Huron River (400 mgd, 525 mgd, and 1371 mgd) Three designs have been developed for the Huron River site. All three would be completely new facilities corresponding to the schematics shown in Figures IV-26, 27, 28. Wastewater would be treated in the same manner as previously discussed.

Separation would be maintained for first and second stage lime clarification sludges. First stage sludge would be thickened, dewatered on vacuum filters and incinerated. Incineration ash would be disposed of by landfill. Second stage sludge would be thickened, dewatered on vacuum filters and recalcined. The product lime would be recycled to the lime clarification process.

Monroe (40 mgd) The plant proposed for Monroe would be located at the site of the present plant and would make extensive use of existing facilities. Figure IV-29 shows the schematic for the proposed plant.

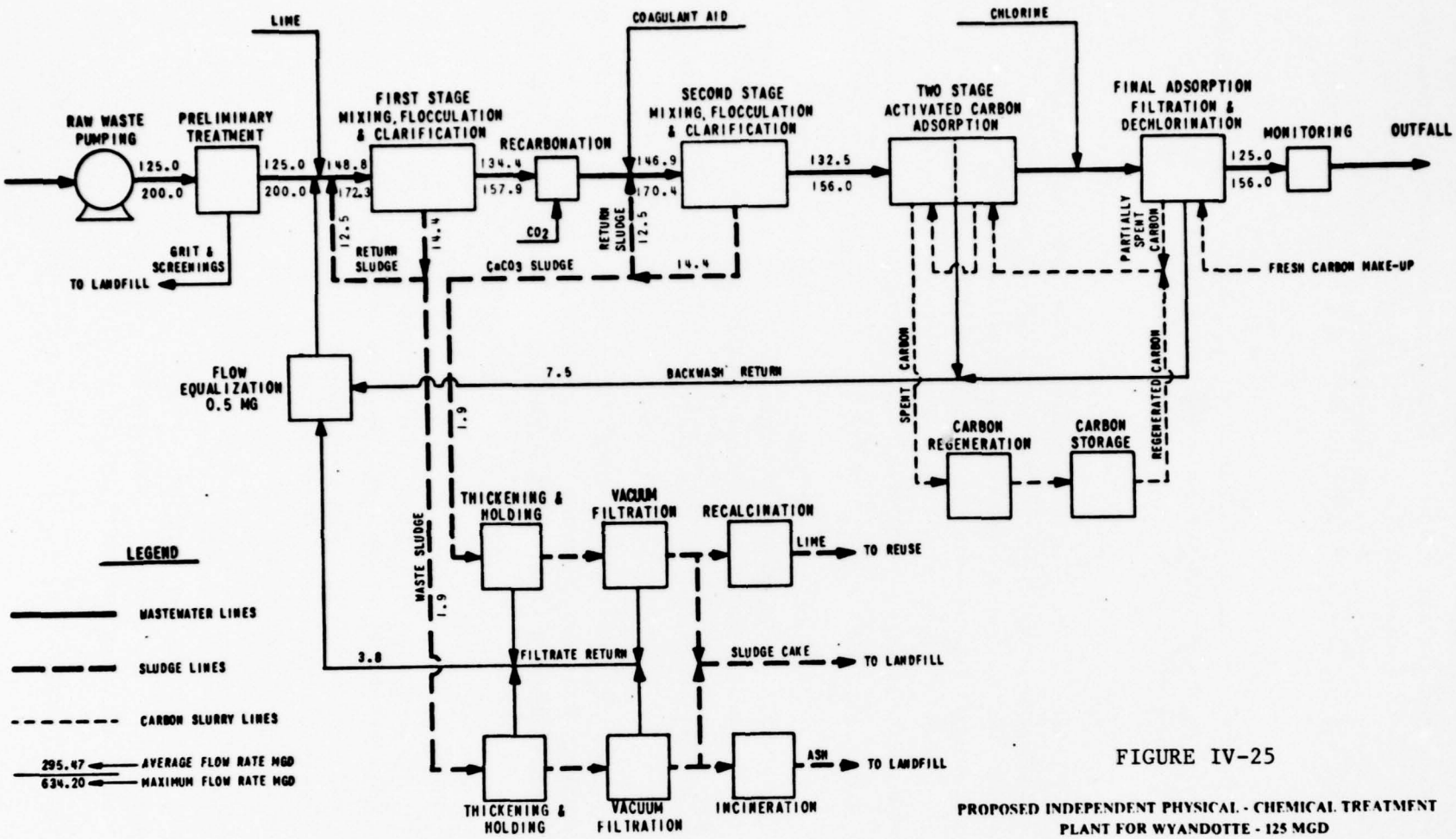

FIGURE IV-25

PROPOSED INDEPENDENT PHYSICAL - CHEMICAL TREATMENT PLANT FOR WYANDOTTE - 125 MGD

TABLE IV - 24

COST ESTIMATE

FOR

WYANDOTTE INDEPENDENT PHYSICAL-CHEMICAL TREATMENT PLANT

125 MGD

	Construction Cost Thousand Dollars	Amortized Construction Cost Thousand Dollars	Amortized Replacement Cost Thousand Dollars	Annual Operation and Maintenance Thousand Dollars	Total Annual Treatment Cost Thousand Dollars
Raw Waste Pumping	-	-	-	135	135
Pretreatment	-	-	-	166	166
Flow Equalization	-	-	-	-	-
Two-Stage Lime Clarification	5,400	319	135	2,167	2,486
Activated Carbon Adsorption	21,000	1,240	-	1,186	2,561
Chlorination System	1,800	106	-	1,982	2,088
Sludge Thickening	-	-	-	108	108
Vacuum Filtration	-	-	34	153	187
Recalcination - Incineration	-	-	281	541	822
Land Aquisition (10 Acres)	100	6	-	-	6
Site Work & Piping	1,300	77	-	113	190
Garage & Shop	100	6	-	-	6
Administration Bldg. & Laboratory	900	53	-	167	220
Instrumentation	300	18	-	15	33
Outfall	-	-	-	-	-
Total Construction Cost	30,900				
Engineering, Administration, Legal & Contingencies	9,270	547			547
Total Project Cost	40,170	2,372	450	6,733	9,555

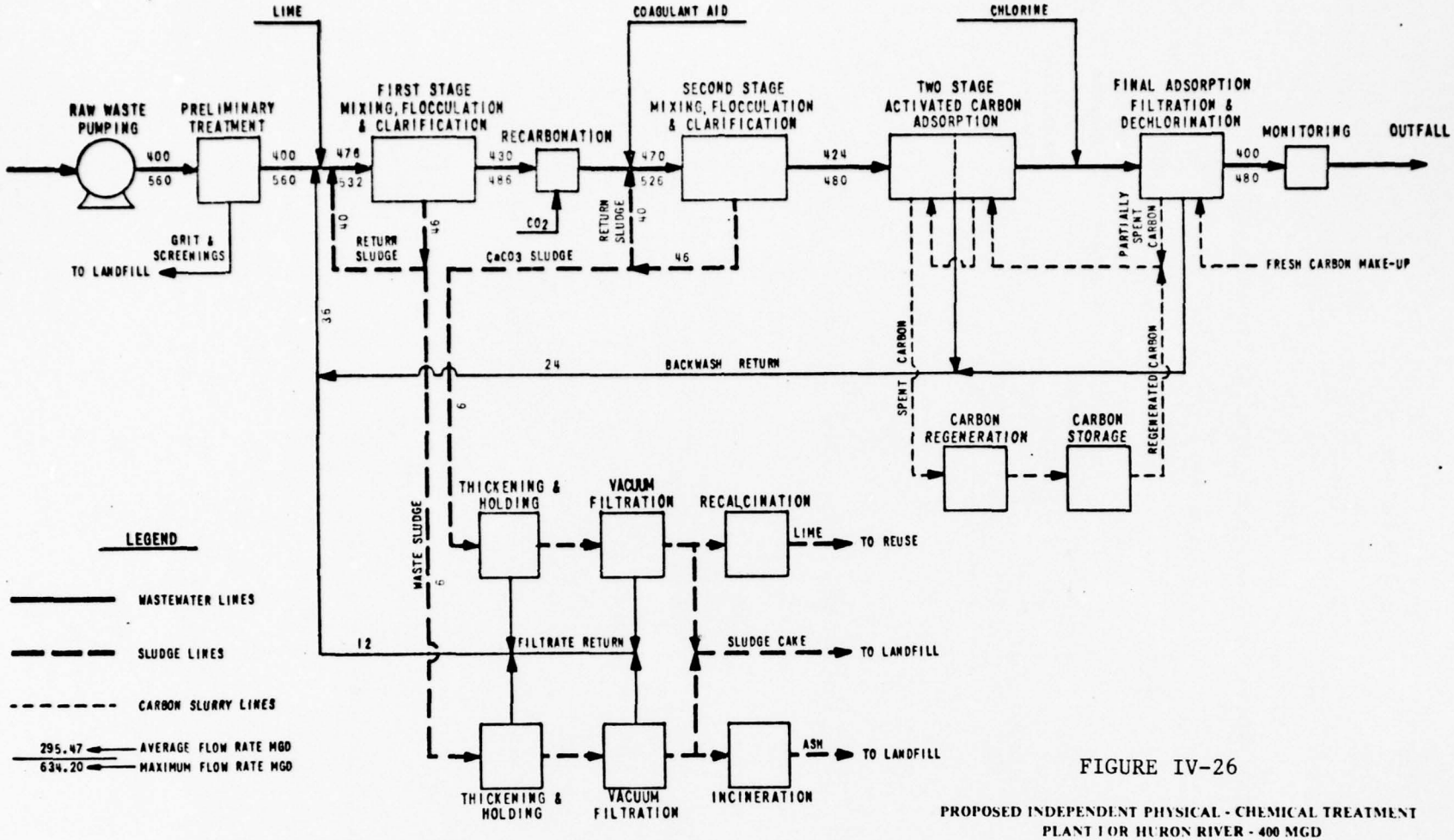

FIGURE IV-26

PROPOSED INDEPENDENT PHYSICAL - CHEMICAL TREATMENT PLANT FOR HURON RIVER - 400 MGD

TABLE IV - 25

COST ESTIMATE

FOR

HURON RIVER INDEPENDENT PHYSICAL-CHEMICAL TREATMENT PLANT

400 MGD

	Construction Cost Thousand Dollars	Amortized Construction Cost Thousand Dollars	Amortized Replacement Cost Thousand Dollars	Annual Operation and Maintenance Thousand Dollars	Total Annual Treatment Cost Thousand Dollars
Raw Waste Pumping	8,800	520	-	409	929
Pretreatment	1,400	83	-	445	528
Flow Equalization	-	-	-	-	-
Two-Stage Lime Clarification	27,400	1,618	-	7,141	8,759
Activated Carbon Adsorption	65,000	3,839	418	2,878	7,135
Chlorination System	3,800	224	-	6,014	6,238
Sludge Thickening	5,000	295	-	337	632
Vacuum Filtration	3,250	192	111	438	741
Recalcination - Incineration	18,600	1,099	639	1,599	3,337
Land Aquisition (106 Acres)	530	31	-	-	31
Site Work & Piping	4,660	275	-	388	663
Garage & Shop	470	28	-	-	28
Administration Bldg. & Laboratory	3,330	196	-	571	767
Instrumentation	1,070	63	-	43	106
Outfall	400	24	-	-	24
Total Construction Cost	143,700	8,487			
Engineering, Administration, Legal & Contingencies	43,110	2,546			2,546
Total Project Cost	186,810	11,033	1,168	20,263	32,464

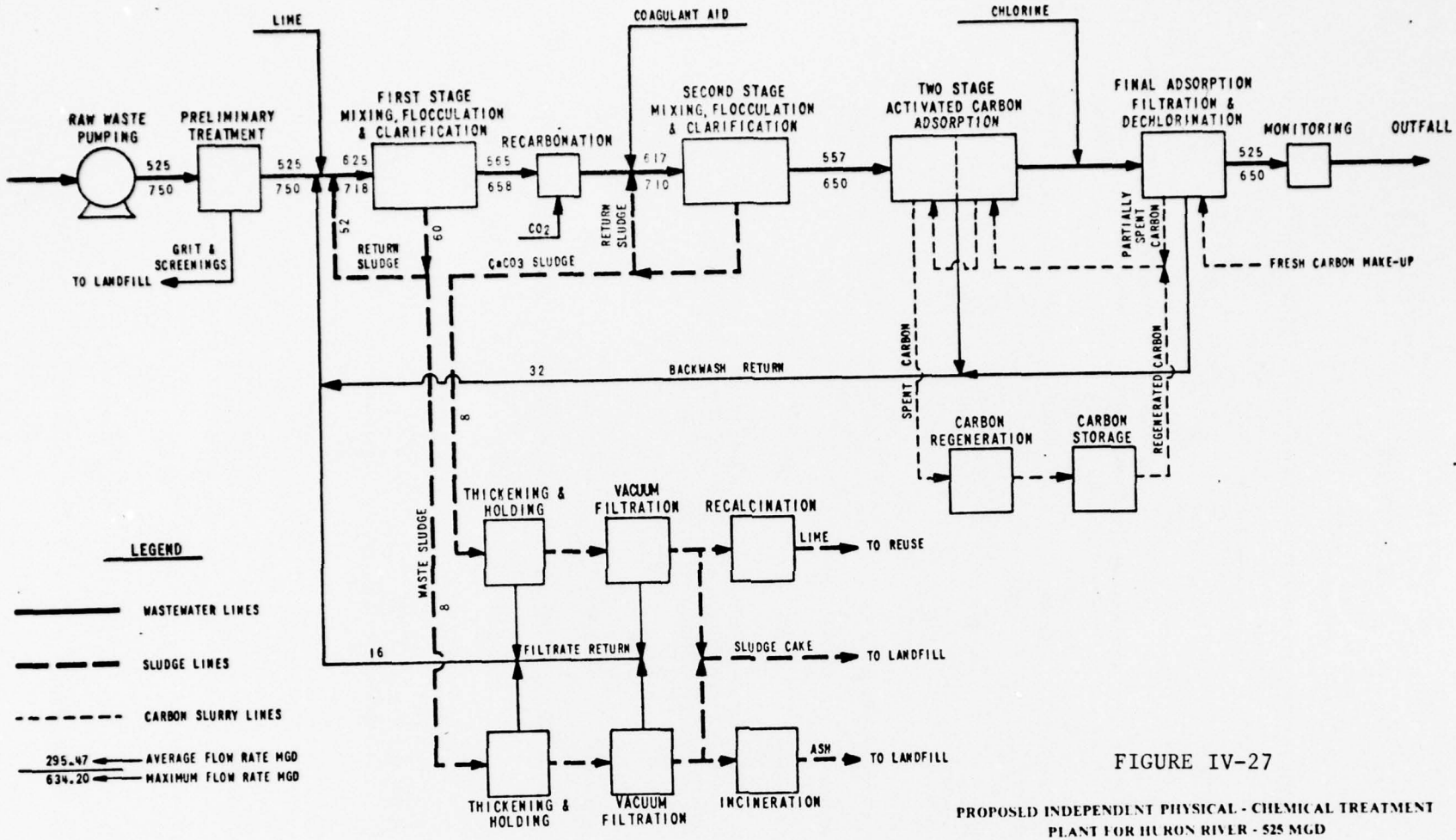

FIGURE IV-27

PROPOSED INDEPENDENT PHYSICAL - CHEMICAL TREATMENT PLANT FOR HURON RIVER - 525 MGD

TABLE IV - 26

COST ESTIMATE

FOR

HURON RIVER INDEPENDENT PHYSICAL-CHEMICAL TREATMENT PLANT

525 MGD

	Construction Cost Thousand Dollars	Amortized Construction Cost Thousand Dollars	Amortized Replacement Cost Thousand Dollars	Annual Operation and Maintenance Thousand Dollars	Total Annual Treatment Cost Thousand Dollars
Raw Waste Pumping	11,100	656	-	680	1,336
Pretreatment	1,700	100	-	556	656
Flow Equalization	-	-	-	-	-
Two-Stage Lime Clarification	35,000	2,067	-	9,149	11,216
Activated Carbon Adsorption	85,000	5,020	547	3,700	9,267
Chlorination System	4,600	272	-	9,747	10,019
Sludge Thickening	6,700	396	-	438	834
Vacuum Filtration	4,000	236	136	577	949
Recalcination - Incineration	24,000	1,417	824	2,073	4,314
Land Aquisition (132 Acres)	660	39	-	-	39
Site Work & Piping	6,020	356	-	502	858
Garage & Shop	600	35	-	-	35
Administration Bldg. & Laboratory	4,300	254	-	740	994
Instrumentation	1,380	81	-	63	144
Outfall	400	24	-	-	24
Total Construction Cost	185,460	10,953			
Engineering, Administration, Legal & Contingencies	55,640	3,286			3,286
Total Project Cost	241,100	14,239	1,507	28,225	43,971

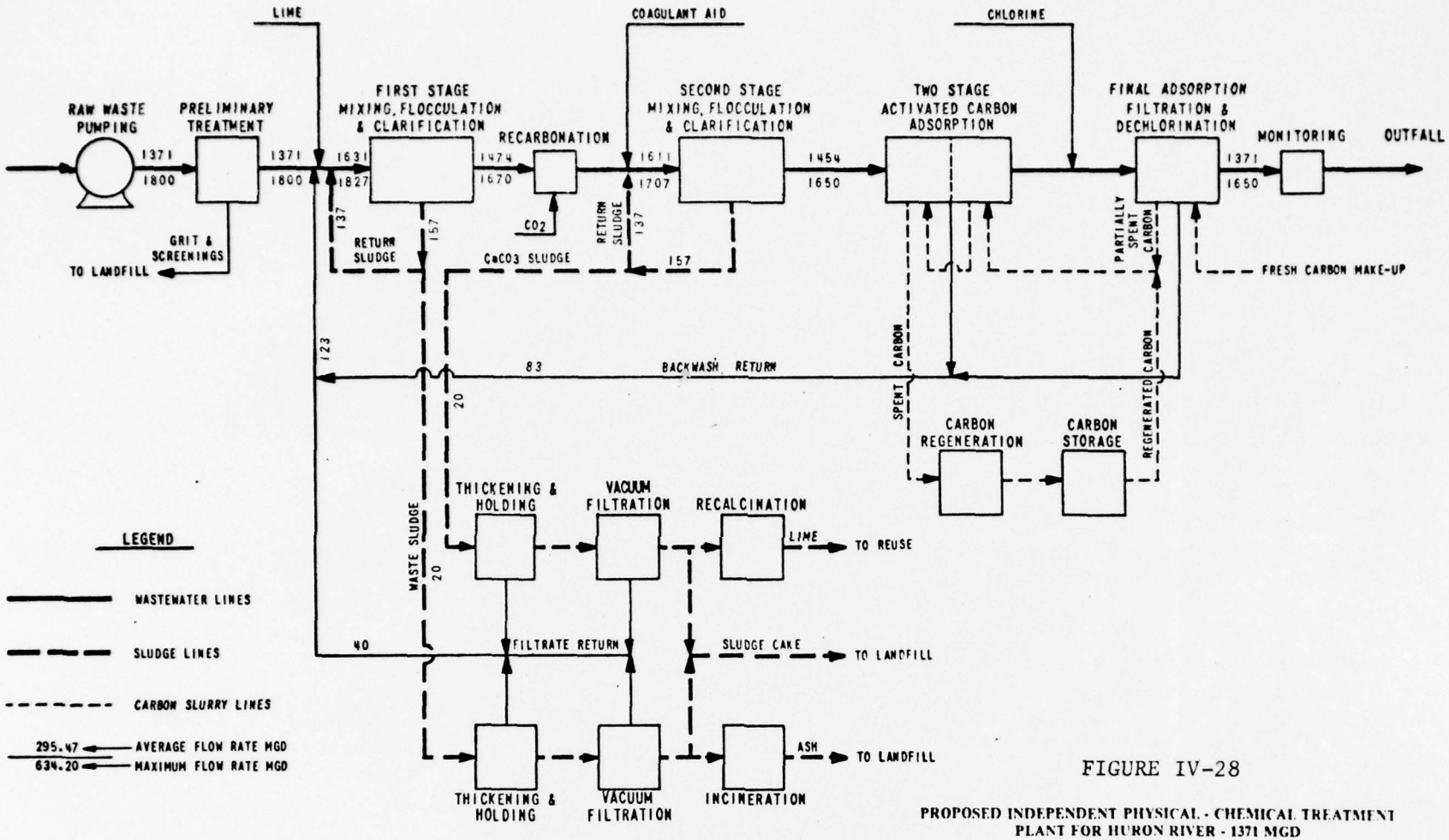

FIGURE IV-28

PROPOSED INDEPENDENT PHYSICAL - CHEMICAL TREATMENT PLANT FOR HURON RIVER - 1371 MGD

TABLE IV - 27

COST ESTIMATE

FOR

HURON RIVER INDEPENDENT PHYSICAL-CHEMICAL TREATMENT PLANT

1371 MGD

	Construction Cost Thousand Dollars	Amortized Construction Cost Thousand Dollars	Amortized Replacement Cost Thousand Dollars	Annual Operation and Maintenance Thousand Dollars	Total Annual Treatment Cost Thousand Dollars
Raw Waste Pumping	34,800	2,055	-	1,331	3,386
Pretreatment	5,300	313	-	1,301	1,614
Flow Equalization	-	-	-	-	-
Two-Stage Lime Clarification	90,000	5,315	-	23,086	28,401
Activated Carbon Adsorption	210,000	12,403	1,352	9,500	23,255
Chlorination System	8,300	490	-	23,676	24,166
Sludge Thickening	16,900	998	-	1,122	2,120
Vacuum Filtration	8,300	490	282	1,497	2,269
Recalcination - Incineration	57,000	3,366	1,959	5,163	10,488
Land Aquisition (310 Acres)	1,550	92	-	-	92
Site Work & Piping	15,070	890	-	1,255	2,145
Garage & Shop	1,510	89	-	-	89
Administration Bldg. & Laboratory	10,760	635	-	1,850	2,485
Instrumentation	3,440	203	-	169	372
Outfall	2,800	165	-	-	165
Total Construction Cost	465,730	27,504			
Engineering, Administration, Legal & Contingencies	139,720	8,252			8,252
Total Project Cost	605,450	35,756	3,593	69,950	109,299

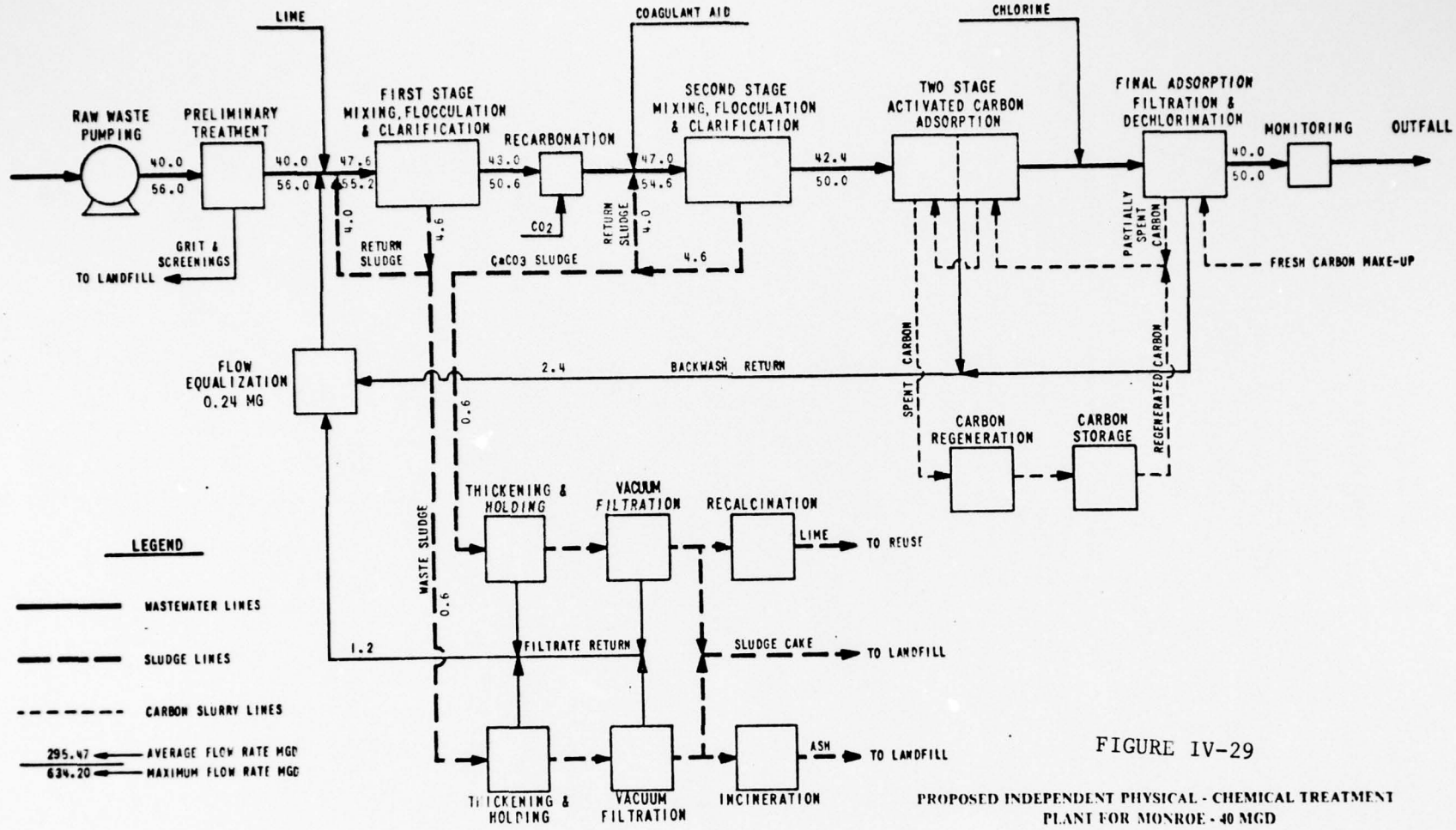

FIGURE IV-29

PROPOSED INDEPENDENT PHYSICAL - CHEMICAL TREATMENT PLANT FOR MONROE - 40 MGD

TABLE IV - 28

COST ESTIMATE

FOR

MONROE INDEPENDENT PHYSICAL-CHEMICAL TREATMENT PLANT

40 MGD

	Construction Cost Thousand Dollars	Amortized Construction Cost Thousand Dollars	Amortized Replacement Cost Thousand Dollars	Annual Operation and Maintenance Thousand Dollars	Total Annual Treatment Cost Thousand Dollars
Raw Waste Pumping	1,100	65	-	33	98
Pretreatment	250	15	-	47	62
Flow Equalization	-	-	-	-	-
Two-Stage Lime Clarification	2,100	124	-	785	909
Activated Carbon Adsorption	8,000	472	51	340	863
Chlorination System	860	510	-	680	731
Sludge Thickening	500	30	-	31	61
Vacuum Filtration	-	-	17	56	73
Recalcination - Incineration	2,300	136	89	184	409
Land Aquisition (12 Acres)	60	4	-	-	4
Site Work & Piping	700	41	-	63	104
Garage & Shop	70	4	-	-	4
Administration Bldg. & Laboratory	500	30	-	87	117
Instrumentation	160	10	-	9	19
Outfall	-	-	-	-	-
Total Construction Cost	16,600	982			
Engineering, Administration, Legal & Contingencies	4,980	294			294
Total Project Cost	21,580	1,276	157	2,315	3,748

Existing raw waste pumping and preliminary treatment facilities in the existing plant would require minor expansion. Existing clarifiers and aeration tanks would be altered and additional facilities constructed for the lime clarification process. The remaining wastewater processing equipment would be new construction.

Existing sludge handling facilities would be sufficient; however, a new furnace would be required for recalcination of second stage lime sludge.

Adrian-Tecumseh (22.5 mgd) The treatment plant designed for the Adrian-Tecumseh site would be a new plant designed to treat a continuous flow of 22.5 mgd. Average municipal and industrial wastewater flow would be 12 mgd and the remaining capacity would be utilized for treatment of storm runoff pumped from storage facilities. Cost estimates are based on an average daily flow of 15.3 million gallons.

The wastewater treatment schematic is shown in Figure IV-30. Wastewater treatment follows the same scheme as previously discussed. Lime sludges would be mixed dewatered and incinerated. Recalcined lime would be reused to the maximum degree possible.

The designs and cost estimates for IPCT plants presented in this section were altered to reflect changes resulting from the plan formulation process conducted during the formation of total wastewater management alternatives. The changes show the effects of varying sludge handling and treatment methods at these plants and the cost benefits accrued from integrating the stormwater and municipal-industrial wastewater facilities at collocated sites. The design of a central sludge transportation and disposal system for the majority of the area was more economically advantageous to the regional alternatives, and therefore, the associated costs were eliminated from the cost estimates for the affected plants. The details of these cost estimates are shown in part B of the addendum to this appendix. Information for the changes in the cost estimates was obtained from Appendix A of the final report, Advanced Wastewater Treatment Facilities for Southeastern Michigan which was prepared by Stanley Consultants for this study.

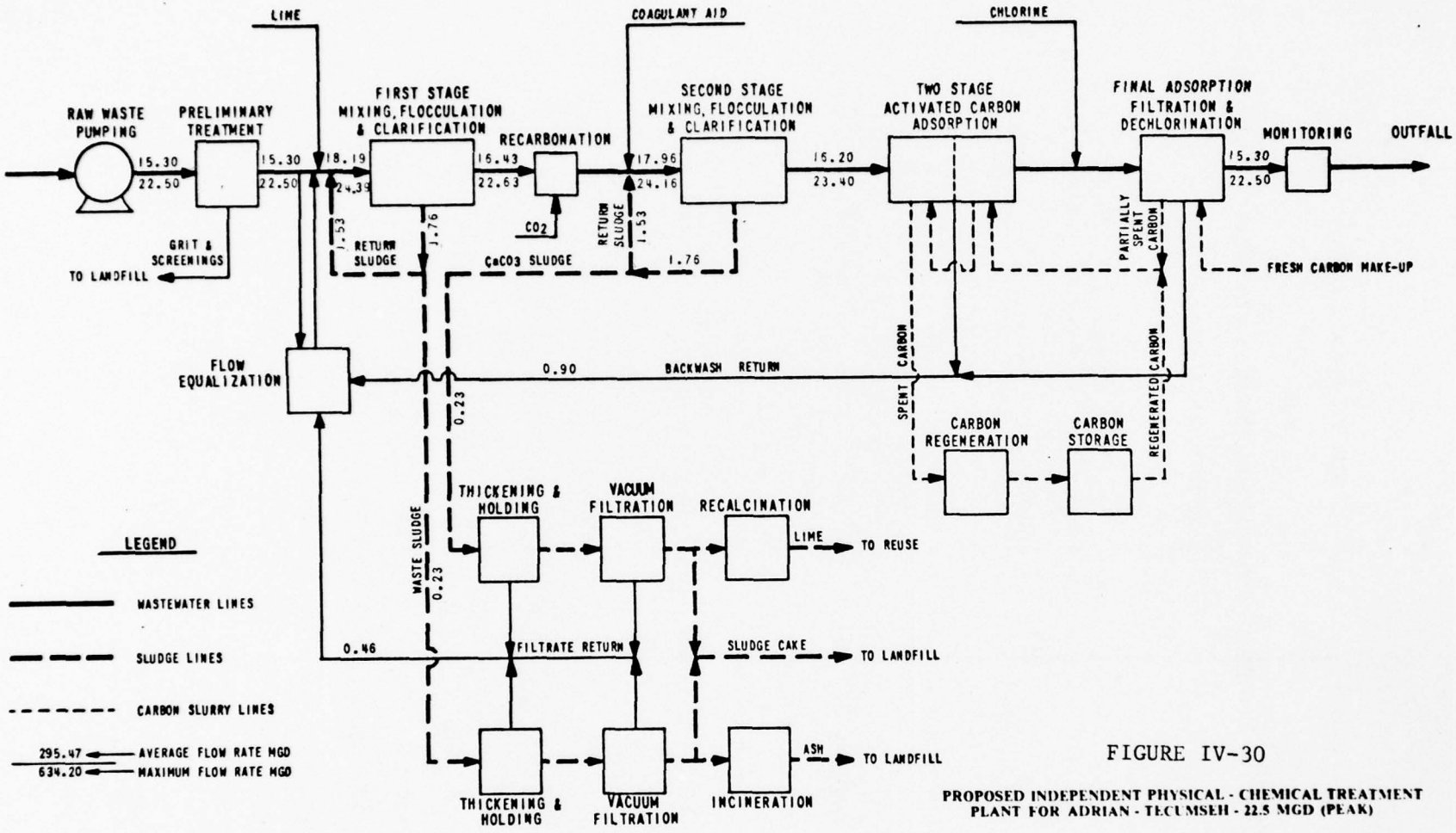

FIGURE IV-30

PROPOSED INDEPENDENT PHYSICAL - CHEMICAL TREATMENT PLANT FOR ADRIAN - TECUMSEH - 22.5 MGD (PEAK)

TABLE IV - 29

COST ESTIMATE

FOR

ADRIAN - TECUMSEH INDEPENDENT PHYSICAL-CHEMICAL TREATMENT PLANT

22.5 MGD (PEAK FLOW)

	Construction Cost Thousand Dollars	Amortized Construction Cost Thousand Dollars	Amortized Replacement Cost Thousand Dollars	Annual Operation and Maintenance Thousand Dollars	Total Annual Treatment Cost Thousand Dollars
Raw Waste Pumping	800	47	-	21	68
Pretreatment	200	12	-	29	41
Flow Equalization	-	-	-	-	-
Two-Stage Lime Clarification	1,700	100	-	302	402
Activated Carbon Adsorption	4,000	236	26	140	402
Chlorination System	600	35	-	265	300
Sludge Thickening	300	18	-	12	30
Vacuum Filtration	300	18	10	33	61
Recalcination - Incineration	1,800	106	60	85	251
Land Aquisition	100	6	-	-	6
Site Work & Piping	340	20	-	28	48
Garage & Shop	240	15	-	-	15
Administration Bldg. & Laboratory	30	2	-	2	4
Instrumentation	70	4	-	-	4
Outfall	70	4	-	7	11
Total Construction Cost	10,510	623			
Engineering, Administration, Legal & Contingencies	3,150	186	-	-	186
Total Project Cost	13,670	809	96	924	1,829

Land Treatment Systems

A land treatment system, as it has been developed for this study, was divided into two separate design projects. The first consisted of the design of lagoon treatment facilities that would provide secondary treatment to the wastewater. The second consisted of the design of facilities for applying the wastewater to a suitable land site and for recovering the renovated water after it had percolated through the soil. In each case an initial investigation outlined broadly the methods, criteria, and data to be used. Then, a detailed investigation refined the most favorable methods and resulted in the formation of system components that had detailed designs and cost estimates.

Lagoon Treatment Facilities - Initial Investigations

Two feasible locations were identified as sites for lagoon treatment systems. The first site, called the (Armada Treatment Site), was located in western St. Clair County, near the village of Armada approximately midway between Lapeer and Port Huron. The area of this site is about 60 square miles. The second lagoon treatment site was located in Ida Township and was consequently called the (Ida Treatment Site). It is located in Monoroe County about 10 miles west of the City of Monroe and comprieses an area of 22 square miles. Figure IV-31 shows a map identifying these sites.

FIGURE IV-31

TREATMENT LAGOON SITES INITIAL INVESTIGATIONS

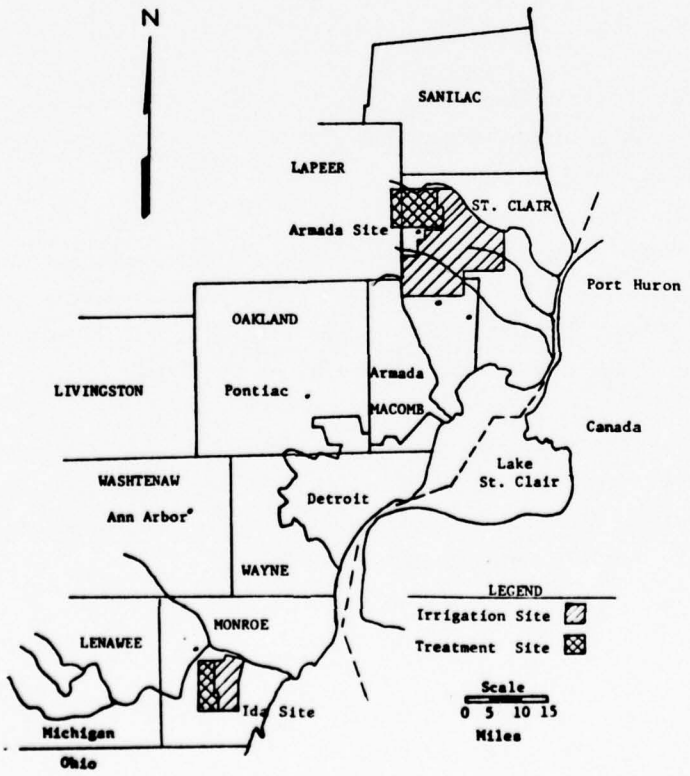

The amount of water to be treated at these lagoons was developed from the design flows which were judged to be typical of those generated in the metropolitan Detroit area and are presented in Table IV-30. It was recognized that the actual flows may prove to be of greater magnitude than is shown. The design of basic units of the lagoon system was completed in this phase, however, with the understanding that since a modular system was being planned the increase in flow could be provided for by the construction of additional treatment units.

TABLE IV-30

INITIAL DESIGN FLOW RATES FOR TREATMENT LAGOONS-MGD

	Municipal and Industrial		Stormwater		Combined		Renovated
Location	Avg. Annual	Peak*	Avg. Annual	Peak	Avg. Annual	Peak	Avg. Annual
Armada	800	1400	445	2405	1245	3805	623
Ida	120	210	360	360	480	570	240

* Flow calculated with peaking factor of 1.75

A flow diagram of a typical lagoon treatment system is shown in Figure IV-32. This system consists of screening, conveyance, grit removal, aeration lagoons, storage lagoons, sludge disposal, seepage control, and disinfection. These unit processes are discussed in the following paragraphs.

Screening of the wastewater, to prevent large objects from entering the conveyance system, would be by automatically cleaned bar screens. Debris collected on these screens would be disposed of in a landfill.

Conveyance systems would provide a means of transporting the water from major collection points within the existing system to the treatment lagoons. They would be gravity flow deep tunnels, large size conventional interceptors, or force mains. The designs are discussed in detail in the first portion of Chapter IV of this appendix.

Grit chambers were designed to remove particles of 0.2 mm in diameter and larger having a specific gravity greater than or equal to 2.65. Velocities of 1 foot per second through the grit chamber were designed for scouring grit and minimizing organic material in the settled grit. Grit disposal would be through sanitary landfill.

FIGURE IV-32

FLOW DIAGRAM OF TYPICAL LAND TREATMENT SYSTEM

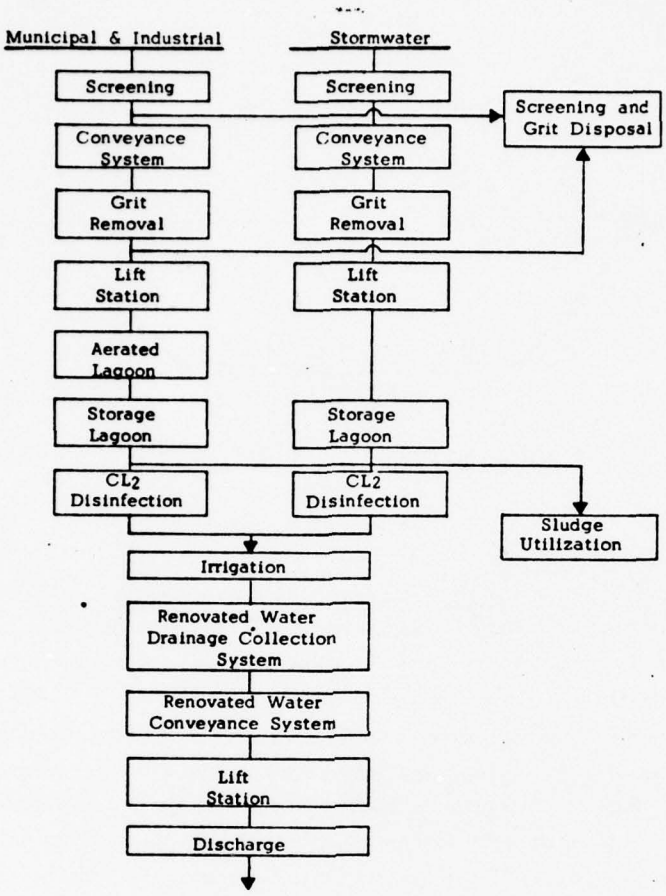

Aerated lagoons were designed to remove 70% of the BOD material of the wastewater entering the lagoon system. These lagoons were designed to be of a modular type with increased flow to be handled merely by construction of additional modules. Two types of modeles were designed during the initial investigations. One module was designed for M & I flow only and the other module was designed for combined M & I and stormflow. A cross section of a typical aerated lagoon module is shown in Figure IV-33.

FIGURE IV-33

TYPICAL AERATED LAGOON MODULE

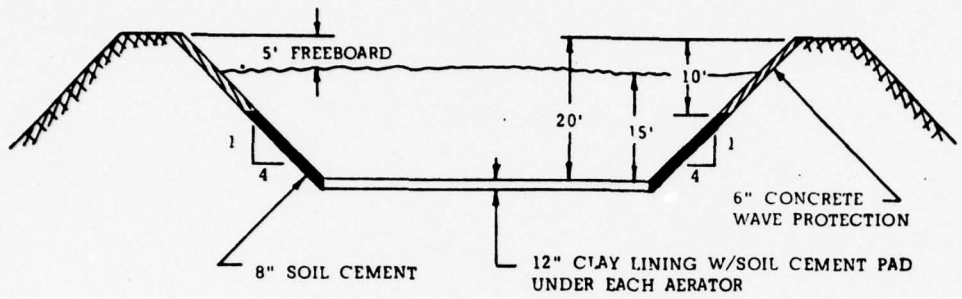

Storage lagoons were designed to hold the effluent from the aerated lagoons until it would be applied to the irrigation areas. These modular storage lagoons were designed to have a capacity of 80 MGD days of storage for a total storage capacity of 12,400 MG. A modular storage unit would have a design working depth of 20 feet, dead storage for solids accumulation of 3 feet, freeboard of 7 feet, and side sloped of 4:1. Each modular unit covered a surface area of 3 square miles (1.75 miles on a side). Interior slopes were designed with 8 inches of soil-cement for erosion prevention. If the unit were not constructed on a natural clay base, then an 8 inch thick lining of clay extending 400 feet inside the inside perimeter of the bottom of the storage unit would be constructed for seepage prevention.

Sludge disposal would be accomplished by application to land after stabilization in the storage lagoons. Sludge generated primarily from the M & I flows of each system would be allowed to accumulate in the lower three feet (a capacity for 17 years' accumulation) of dead space in the storage lagoon. The sludge would be dredge, pumped to holding tanks, and applied to the soil by the use of tractors hauling portable tanks and a mold-board plow at a rate of 10dry tons per acre per year.

Disinfection would be provided by chlorination facilities located at the outlet structrues of the storage lagoons. The design was based on a disinfection rate of 8 mg/l of chlorine.

Lagoon Treatment Facilities - Detailed Investigations

Detailed investigations were conducted to refine the designs presented in the initial phase of the work. This resulted in the formation of system components that had detailed designs and cost estimates. These components were used as basic building blocks for combonation into viable treatment systems.

Just as in the initial phase of the work, land treatment was divided into two distinct design projects. One involved the design of lagoon treatment facilities; and the other, the design of irrigation and recovery facilities.

The lagoon treatment system consists of screening, and grit removal, aeration lagoons, storage lagoons, sludge disposal, seepage, control and disinfection. The design flow rates are shown in Table IV-31. Table IV-32 shows the wastewater profile used in the detailed investigations.

TABLE IV-31

DESIGN FLOW RATES FOR TREATMENT LAGOONS-MGD

Treatment Site	Municipal and Industrial Avg. Daily	Peak*	Stormwater Average Annual	Combined Average	Peak	Renovated Average
St. Clair	1130	1978	1055	2185	3033	2148
Monroe	320	560	1055	1375	1615	665

* Flow calculated with peaking factor of 1.75

TABLE IV-32

PROFILE OF WASTEWATER CONSTITUENTS FOR TREATMENT LAGOONS

Constituent	Municipal and Industrial mg/l	Stormwater mg/l	St. Clair Site Combined mg/l	Monroe Site Combined mg/l
BOD	132	40	88	61
COD	350	100	230	157
Suspended Solids	226	300	261	283
Settleable Solids	129	75	103	88
Volatile Solids	158	120	140	128
PO_4	36	7.5	23	14
Oils & Greases	71	25	49	35
NH_3 - N	7.5	4.5	6	6
NO_3 - N	0.051	1	0.53	1.01

Screening and grit removal equipment were designed for inclusion in the lagoon treatment system. Mechanically cleaned bar screens are used to remove debris from the influent. They are located immediately ahead of the tunnels so minimal amounts of trash will enter the system. The screening design was based on a maximum velocity through the screens of 2.5 feet per second. The debris collected at these screening units would be trucked to landfill areas.

The grit removal system was designed for removal of particles equal to or greater than 0-2 mm in diameter, and having a specific gravity of at least 2.65. The velocity through the grit chamber was designed at 1 foot per second to permit the grit to settle while keeping the organic matter in suspension. M & I grit chambers would be located adjacent to the aerated lagoons at each site, while the stormflow grit would be removed by sedimentation in isolated cells of the stormwater storage facilities.

Table IV-33 shows the data used in designing grit and screening facilities at the Monroe and St. Clar sites. Table IV-34 shows the costs associated with this design.

TABLE IV-33

GRIT CHAMBER DESIGN DATA

Treatment Sites	St. Clair	Monroe
Design Flow Rates-MGD	3,033	1,615
Number of Grit Chamber Units	32	17
Flow Rate/Unit - MGD	93	93
Unit Length - Ft.	115	115
Unit Width - Ft.	18	18

TABLE IV-34
COST SUMMARY FOR
GRIT REMOVAL FACILITIES

	St. Clair	Monroe
Capital Cost		
Grit Removal-Structure	$2,452,000	$1,190,800
Grit Removal-Equipment	556,000	311,000
Subtotal	$3,008,000	$1,501,800
Land	37,600	41,300
Engineering - 10%	300,800	150,200
Admininstration - 5%	150,400	75,100
Contingency - 10%	300,800	150,200
TOTAL	$3,797,600	$1,018,600
Operation and Maintenance/yr		
Labor (includes 25% overhead)	$ 99,000	$ 66,000
Materials & Supplies (0.1 of Capital Cost)	3,000	1,500
TOTAL	$ 102,000	$ 67,500
Replacement Cost		
Mechanical Equipment 5 years	$ 100,000	$ 50,000
Grit Removal Equipment 25 years	$ 456,000	$ 261,000

In the design of the *aerated lagoons*, the Biochemical Oxygen Demand (BOD) is expected to be reduced by 70 to 90 percent. Acting over a period of 3 days' retention, microorganisms in the wastes feed on the wastewater's organic content and reduce it to acceptable levels for the storage lagoons. These aerobic bacteria need a large supply of oxygen. This oxygen can be provided by diffuse air pipes, through spraying of water through the air, or by aeration of the water by the use of large (egg beater) type floating aerators. In the design of the proposed systems, floating aerators were used to provide aeration since these machines provides air at the least expensive cost. An added advantage to this mode of aeration is the mixing that the wastewater receives as a result of the aeration.

TABLE IV-35
AERATED LAGOON DESIGN DATA

	St. Clair	Monroe
Detention Time-Days	3	3
Flow Rate/Lagoon-MGD	80	80
Number of Lagoons	27	17
Volume/Lagoon-MG	253	253
Volume/Lagoon-Acre-Feet	775	775
Land Area/Lagoon-Acres	57	57
Total Land Area-Acres	1,540	970
Total Land Area-Square Miles	2.4	1.5
Number of Aerators/Lagoon	36	36
Total Number of 150 HP Aerators	972	612
Oxygen Transfer Rate/Aerator lbs. O_2/Hour	432	432
Water Depth-Feet	15	15
Freeboard-Feet	5	5
Dike Height-Feet	20	20
Service Road Width-Feet	20	20

The design criteria for the aerated lagoons are listed shown in Table IV-35. A lagoon size of 80 MGD was chosen to take advantage of the economies of scale. This resulted in 27 lagoons at the St. Clair site and in 17 lagoons at the Monroe site. Each lagoon requires 51 acres of land and 36 - 150 HP aerators. Lagoon depth, aerator spacing and aerator design were chosen to insure complete mixing along with satisfactory oxygen transfer rates. Figure IV-34 shows the aerated lagoon cross-section used in detailed investigations. The side slopes were designed with concrete wave protection, and soil cement was used in underwater areas of potential erosion. A clay lining was designed to minimize seepage. A system of flumes, weirs and gates would allow the lagoons to be used in series or in parallel, or would allow a single lagoon to be isolated for maintenance.

FIGURE IV-34

TYPICAL AERATED LAGOON MODULE

CROSS-SECTION - FINAL DESIGN

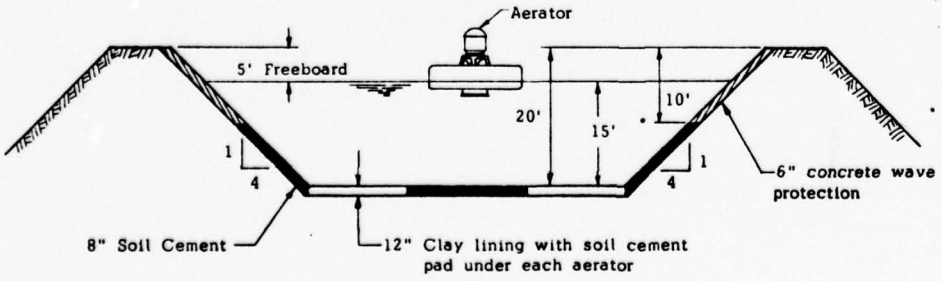

The minimum expected performance of these aerated lagoons will occur during the winter months when the reduced activity of the biomass will reduce the BOD reduction to 70 percent. The multiple lagoon design provides a unique opportunity for treatment of special problems. A severe industrial spill, for instance, can be treated in one or two lagoons. Meanwhile, the other wastewater may be shunted by these particular lagoons.

Cost of these systems are shown in Table IV-36.

TABLE IV-36

COST SUMMARY FOR
AERATED LAGOONS

	St. Clair	Monroe
Capital Cost		
Earth Work	$ 7,678,000	$ 4,835,000
Slope, Bottom & Roadway Construction	17,574,000	15,034,500
Aerators	34,020,000	21,420,000
Electrical	5,832,000	3,672,000
Flumes	12,647,000	5,700,000
Subtotal	$77,751,000	$50,661,500
Land	$ 1,156,500	$ 1,336,700
Engineering - 10%	7,775,100	5,066,200
Administration - 5%	3,887,600	2,533,100
Contingencies - 10%	7,775,100	5,066,200
TOTAL	$98,345,300	$64,663,700
Operation and Maintenance/ year		
Power	$ 9,526,000	$ 5,998,000
Labor (includes 25% overhead)	2,675,000	1,681,000
Materials and Supplies (0.5% of Capital Cost)	388,800	253,300
TOTAL	$12,589,800	$ 7,932,300
Replacement Cost		
Aerators - 10 years	$34,020,000	$21,420,000

Storage lagoons were designed to serve three functions. Their first function was to act as a settling basin after the wastewater passed through the aerated lagoons. They also, as their name implies, serve to store the wastewater until it is applied to the land. Lastly, they provide some biological stabilization of the remaining BOD by surface aeration and photosynthetic activity during the ice-free portion of the year.

TABLE IV-37
STORAGE LAGOON DESIGN DATA

	St. Clair	Monroe
Number of Lagoons	27	17
Volume/Lagoon-MG	12,679	12,679
Volume/Lagoon-Acre/Feet	38,861	38,861
Water Depth-Ft.	20	20
Freeboard-Ft.	7	7
Dead Storage-Ft.	3	3
Dike Height-Ft.	30	30
Land Area/Lagoon-Acres	2,000	2,000
Total Land Area-Acres	54,000	34,000
Total Land Area-Square Miles	84	53
Winter Storage Time-Days	155	155
Service Road Width-Ft.	20	20

The criteria for storage lagoon design is shown in Table IV-37. These lagoons were designed with a twenty-foot depth, three addditional feet of depth for sludge accumulation and seven feet of freeboard. The design area of the lagoons was approximately 2,000 acres. Figure IV-35 shows a typical cross-section.

FIGURE IV-35
TYPICAL STORAGE LAGOON
CROSS-SECTION

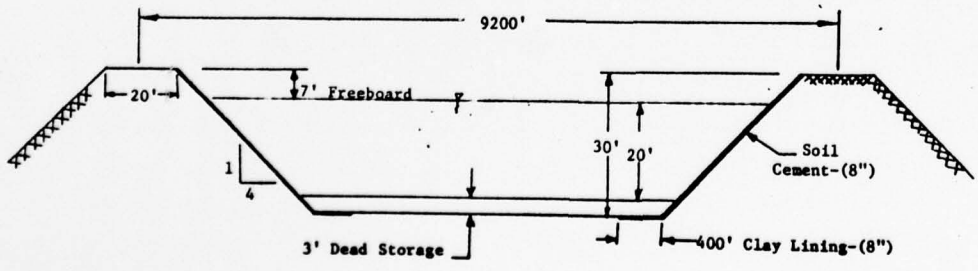

The flow into the storage lagoons from the aerated lagoons was designed as open channel flow. Flumes would be able to direct the flow to any of the storage lagoons adjacent to the aerated lagoons. As in the aerated lagoons, the storage lagoons could be operated in series or in parallel, singly or by multiples. A typical interconnecting structure between lagoons is shown in Figure IV-36.

FIGURE IV-36
INTERCONNECTING STRUCTURE

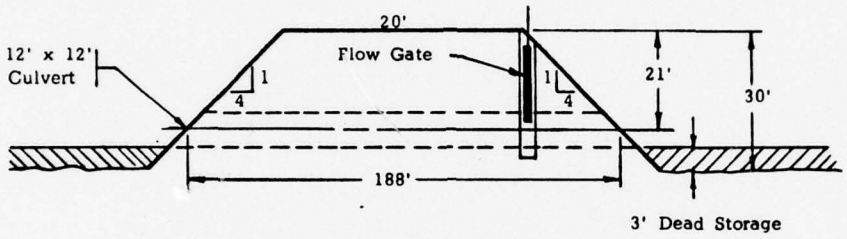

The storage lagoon system was designed to provide chlorination as the last step in its treatment. Figure IV-37 shows an outlet structure with chlorination facilities provided. The entire system was designed to provide 155 days of storage. Costs for the storage lagoon system are shown in Table IV-38.

FIGURE IV-37
OUTLET STRUCTURE WITH CHLORINATION FACILITIES

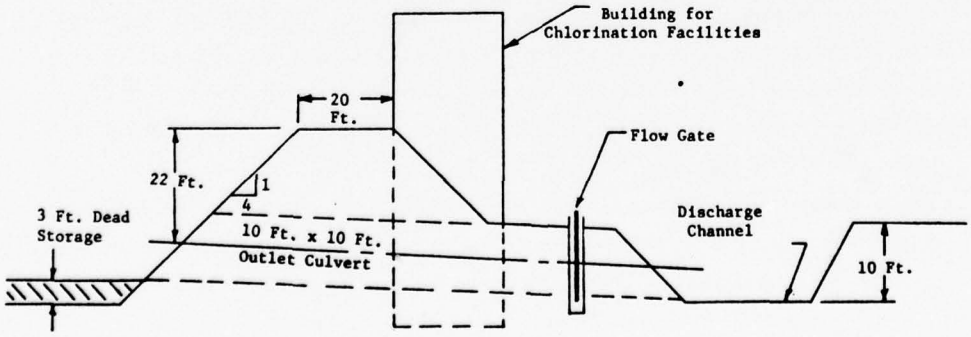

TABLE IV-38

COST SUMMARY FOR STORAGE LAGOONS

Capital Cost	St. Clair	Monroe
Earthwork	$ 94,655,000	$ 59,600,000
Slope Bottom & Roadway Construction	40,144,000	49,103,500
Interconnection Structures	3,287,000	1,903,000
Outlet and Chlorination Structures	5,538,000	3,872,500
Conveyance System Between Sites	24,961,000	793,000
Subtotal	$ 168,585,000	$ 115,272,000
Land	40,554,000	46,852,000
10% Engineering	16,858,500	11,527,200
5% Administration	8,429,300	5,763,600
10% Contingency	16,858,500	11,527,200
Total	$ 251,285,300	$ 190,942,200
Operation and Maintenance/Year		
Labor (includes 25% overhead)	456,000	287,000
Chemicals - Chlorine @$0.05/# - 8 mg/l	2,661,000	1,674,000
Materials & Supplies (0.1% Capital Cost)	168,600	115,300
Total	$ 3,285,600	$ 2,076,300

It was necessary to insure that existing groundwater supplies would not be contaminated by wastewater. For this reason, a *seepage control* system was designed. Elements of this seepage control system are shown in Figure IV-38. Clay, or solid cement linings 12 inches thick were designed for aerated lagoons. It was impractical, however, to design a complete lining for the storage lagoons. An 8-inch thick clay ling was designed for a 400-foot width around the inner periphery of the storage lagoons. A 10-foot deep ditch would also surround the entire lagoon site. This ditch would intercept seepage before it could leave the lagoon area. A monitoring system consisting of 3 well clusters at 2,000-foot intervals would be located along the drainage ditch. The design data for the seepage control system are shown in Table IV-39. Costs are shown in Table IV-40.

FIGURE IV-38

SEEPAGE CONTROL AND SLUDGE DRAINAGE SYSTEM

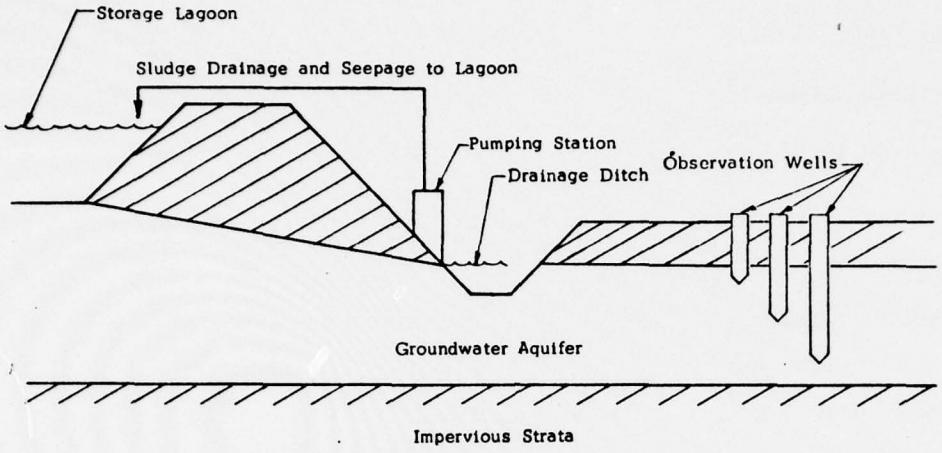

TABLE IV-39

SEEPAGE CONTROL DESIGN DATA

	St. Clair	Monroe
Drainage Channels - Miles	52	57.5
Drainage Pumping Stations	14	15
Spacing of Pumping Stations - Miles	4	4
Pumping Station Capacity - gpm	25,000	25,000
Pumping Station Head - feet	38	38
Number of Observation Well Clusters	137	152
Observation Well Spacing - feet	2,000	2,000

TABLE IV-40

COST SUMMARY FOR SEEPAGE CONTROL

Capital Cost	St. Clair	Monroe
Drainage Channel	$ 2,829,750	$ 3,144,000
Drainage Pumping Station	588,000	630,000
Observation Wells	86,250	95,000
Subtotal	$ 3,504,000	$ 3,869,000
10% Engineering	350,000	387,000
5% Administration	175,000	193,500
10% Contingency	350,000	387,000
Total	$ 4,379,000	$ 4,836,500
Operation & Maintenance/Year		
Power	$ 2,900,000	$ 3,110,000
Labor (includes 25% overhead)	100,000	100,000
Material and Supplies (0.5% Capital Cost)	21,900	24,200
Total	$ 3,021,900	$ 3,234,200

Most of the wastewater constituents would be stabilized in the aerated lagoons. There they would be converted into solids slightly more dense than water. The design flow velocity in the aerated lagoons would keep the solids suspended until discharge to the storage lagoons. The storage lagoons would act as settling basins, allowing the solids to accumulate on the bottom as sludge. There, this material would be digested and become concentrated to approximately 12 percent solids. Dredges would pump the sludges from the lagoon bottoms to farmlands selected for sludge disposal. The sludges would be applied to the land by the use of tractors and "deep plows". The sludge would act as a soil conditioner to increase both the humus content and the fertility of the soil. Figure IV-39 shows the components of the system.

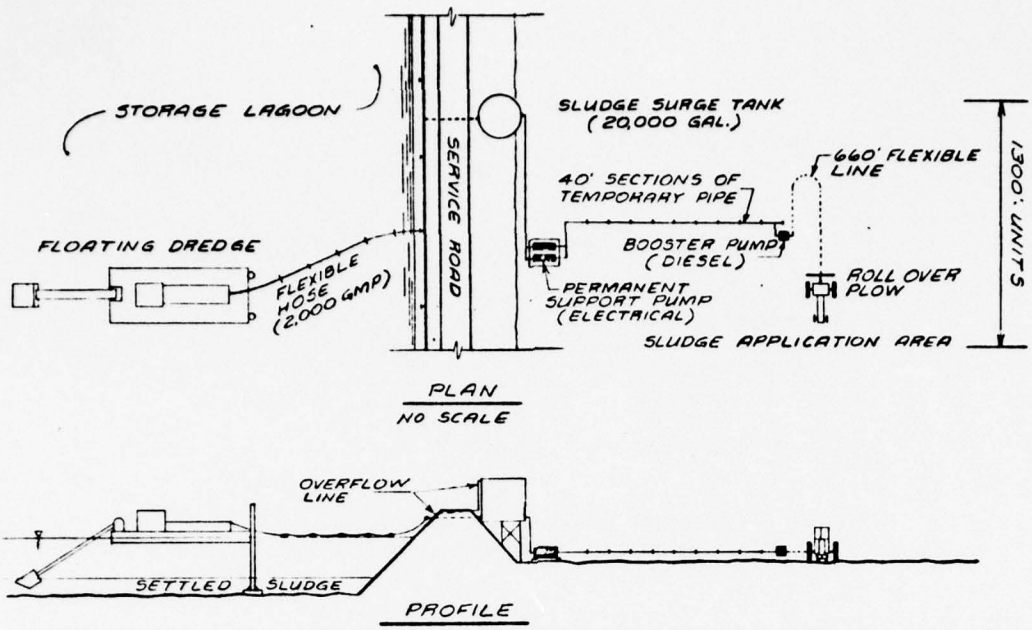

FIGURE IV-39

SLUDGE MANAGEMENT SYSTEM

The design of the *sludge management system* was based on a solids sludge generation rate of 0.8 tons per million gallons. This is a typical value for large metropolitan areas. Sludge from stormflow would be handled in landfill sites.

Storage lagoons were designed with a 3-foot depth sludge accumulation area at the lagoon bottom. Most of the settlement of the sludge is expected to take place in those lagoons nearest the entering conduits. It is from these lagoons that the majority of the sludge would be removed. Dredges with rotating, screw-type blades would pump the sludge through a fexible floating pipe to a permanent pipe system located on the storage lagoon areas. A pumping station located at the lagoon site would then pump the sludge to the selected disposal areas. The sludge, at a 6 percent solids content, would require a minimum velocity in the transmission lines of 3.5 feet per second to prevent settlement.

When the sludge would reach the disposal areas, it would be transported through a header pipe and a series of electric pumps. The electric pumps boost the sludge through a series of 40-foot aluminum pipe sections. At the terminal point of the aluminum pipe, a ortable diesel pump would send the sludge through a flexible hose connected to a rollover plow. This plow is pulled by a tractor back and forth across a field in section widths of 1300 feet. When 6 cycles are completed, a new aluminum pipe is added and the procedure continues.

Sludge application requires a mechanism to disturb the earth's surface so that the sludge may be readily absorbed into the soil. Failure to obtain satisfactory absorption would result in excessive runoff. The type of equipment necessary to accomplish the desired results would be a scarifier used in conjunction with sludge application. The rollover plow has to date been the most effective mechanism for accomplishing this purpose.

TABLE IV-41

SLUDGE MANAGEMENT DESIGN DATA

	St. Clair	Monroe
Dry Solids Generation - Tons/MG	0.8	0.8
Dry Solids Application Rate - Tons/Acre	10	10
Municipal-Industrial Design Flow Rates MGD	1130	320
Sludge Disposal Area - Square Miles	52	15
Minimum Sludge Velocity in Pipelines - Ft./Sec.	3.5	3.5
Number of Dredge-plow Systems	10	3

The entire sludge disposal area would be underdrained with the collected percolate being returned to the lagoon system via trenches and pipes. Table IV-41 summarizes the design data for sludge management systems. Table IV-42 shows the costs associated with the system.

TABLE IV-42

COST SUMMARY FOR SLUDGE MANAGEMENT

	St. Clair	Monroe
Capital Cost		
Drainage System	$ 21,223,800	$ 6,530,400
Equipment	3,718,000	1,115,400
Header Pipe	15,346,200	3,903,000
Pump Stations	1,013,900	195,000
Sub Total	$ 41,301,900	$11,743,800
Land	$ 25,000,000	$13,200,000
Engineering-10%	4,130,200	1,174,400
Administration-5%	2,065,100	587,200
Contingency - 10%	4,130,200	1,174,400
Total	$ 76,627,400	$27,879,800
Operation and Maintenance Cost		
Power	$ 29,700	$ 8,400
Labor (includes 25% overhead)	2,060,000	620,000
Material and Supplies	1,050,000	315,000
	$ 3,139,700	$ 943,400
Replacement Costs		
Header Pipe & Pump Stations- 25 years	$ 16,360,100	$ 4,098,000

Irrigation and Collection Systems - Initial Investigations

Specific decisions had to be made for the development of a prototype design in the initial investigation. First, criteria for soil selection were developed. Next, irrigation sites were chosen using these solid criteria. And third, an irrigation and recovery system had to be designed for these sites.

The criteria for soil selection became a combination of chemical, geographical and agricultural requirements. Preliminary studies had indicated that the lands near the Southeastern Michigan area were necessary for economic land disposal of wastewater. Consequently, lands were examined in Tuscola, Huron, Sanilac, Lapeer, St. Clair, Macomb, Lenawee, Washtenaw and Monroe Counties in Michigan, and in Fulton and Williams Counties in Ohio. Only in these aforementioned counties were lands examined for use as potential wastewater sites.

Lands to be used for wastewater renovation were those where population densities were low, and where there were large amounts of continguous land available for irrigation (the smallest area investigated was at least a township in size) and conforming to the following soil selection criteria:

1. Mineral soil rather than organic soil. Small isolated areas of organic soils exist in Southeastern Michigan. These areas were rejected to maintain uniformity in the engineering designs and agricultural programs required for the mineral soils. Organic soils have poorer load bearing capacity and perhaps lower affinity for certain wastewater constituents.

2. Medium-texture. Soil adsorption of constituents from solution generally increases with clay fraction and organic matter content Medium-texture soils were selected as being optimum for both adsorbing wastewater constituents and having acceptable water permeability rates. Coarse-texture soils such as sands and loamy sands have lower clay contents and hence a lower probability of adsorbing wastewater constituents. Fine-texture soils such as clay, silty clay, and sandy clay adsorb the constituents but usually have lower permeabilities making them unsuitable for land treatment of wastewater.

3. Permeabilities exceeding 0.6 in/hr in surface soil horizon and 0.2 in/hr in subsurface horizons. This surface horizon permeability permits adequate initial uptake of wastewater. The subsurface horizon permeability is minimal to maintain a functional time drainage system.

4. Crop growth potential. Plant growth is required to assist the soil in wastewater renovation. Hence, toxic soil concentrations of alkali or other materials must be absent to insure crop production.

5. Depth to bedrock exceeding 10 feet. This depth is necessary for installing an underdrain system. At least five foot depth or aerobic soil is desired for wastewater renovation.

6. Level to gently rolling topography with minimal woodland. Six percent was selected as the upper limit for acceptable slopes. Areas with predominant slopes exceeding 6% increase the difficulty and cost of constructing an underdrain system and controlling soil erosion and water runoff. Irrigation systems requiring graded surfaces are adversely affected by steep slopes. Minimal land leveling and woodland clearing are desired to reduce site preparation costs.

The the selection of soils capable of renovating wastewater, the general agricultural aspects of the area must be assessed. The southeastern Michigan area has a growing season ranging from 150 days to 180 days. The average annual precipitation varies from 28 to 34 inches, spread nearly uniformly through the years. During the growing season, an average of 0.7 inches precipitation occurs each week. Average annual precipitation exceeds average annual evapotranspiration by 5 to 10 inches. The soils to be used for wastewater renovation were chosen with the understanding that crops would be periodically removed from the soil.

Site selections were made using the above criteria. The selected sites (see Figure IV-40) and the attendant soil types are discussed in the following paragraphs.

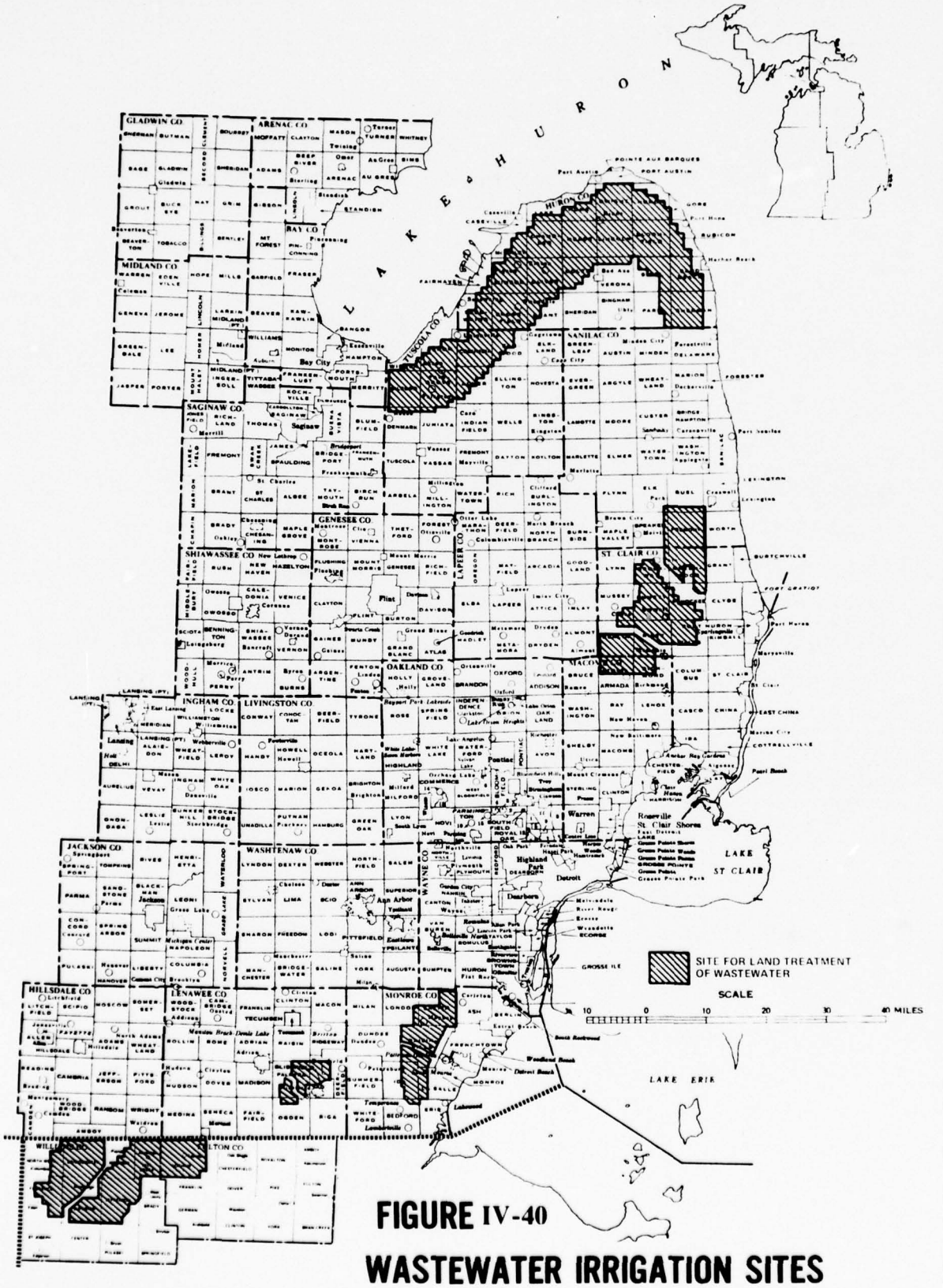

FIGURE IV-40

WASTEWATER IRRIGATION SITES

St. Clair Site

The St. Clair Site actually is composed of Townships in all or parts of the 3 counties of Laper, Sanilac and St. Clair.

These Townships are as follows:

Lapeer County	Sanilac County	St. Clair County
Burnside Twp	Fremont Twp	Berlin Twp
Northbranch Twp	Valley Twp	Riley Twp
Burlington Twp	Melvin Twp	Wales Twp
	Elk Twp	Mossey Twp
	Buel Twp	Emmett Twp
		Kenockee Twp
		Lynn Twp
		Brockway Twp
		Greenwood Twp

The soils of the St. Clair County portion of the site belongs to Conover-Blount-Parkhill-Metamora Soil Association. The soils of the Sanilac portion belongto the Parkhill-Capac Soil Association. The soils on the Lapeer County portion of this site generally belong to the Capac-Belding-Brookston Assocation. All of these soils range from sandy loam to loamy clays, with poor drainage.

Monroe Site

The selected site included sizable portions of Ida, Raisinville Twp., Exeter Twp., and Exeter, and small parts of Bedford and LaSalle Townships. Soil types are generally Pewano-Selfridge. These soils are generally poorly drained.

Lenawee Site

A site Southeast of Adrian was selected, involving parts of Palmyra, Ogden, Blissfield, and Deerfield Townships. Macomb Soil, the principal soil type of this area is described as being level and undulating, imperfectly and poorly drained soils developed in deltaic and lucustrine deposits.

Huron-Tuscola Site

A continuous belt of nearly level topography inland from Lake Huron was selected for use at the Huron-Tuscola Site. Townships involved are as follows:

Huron County		**Tuscola County**
Sherman	Lake	Wisner
Paris	Hume	Akron
Sigel	McKinley	Columbia
Sand Beach	Chandler	Elmwood
Lincoln	Meade	Gilford
Bloomfield	Fairhaven	Fairgrove
Rubicon	Winsor	Almer
Dwight	Oliver	Ellington
Huron	Sebewaing	Denmark
	Brookfield	Juniata
		Tuscola

The site soils in Tuscola and northern Huron counties belong to a soil association described as poorly drained soils with a loamy surface layer over calcareous loams or clay loams; on till plins. Soils include variants of Londo, Tappan and Parkhill. The other major soil association is a rather narrow strip of land along the eastern shore of Huron County, characterized as poorly drained sands over clay loams, and is represented by variants of Iosco and Brevort soils.

Williams-Fulton (Ohio) site

This site includes all or portions of the following townships:

Williams County		Fulton County
North West	Madison	Gorham
Florence	Jefferson	Franklin
Bridgewater	Mill Creek	
Superior	Brady	

Several methods for applying wastewater were investigated including: center pivot spray irrigation, fixed set spray irrigation, graded boarder irrigation, and furrow irrigation. As was done in the design of lagoon systems, modules were designed as representative components of a total system. It was assumed that all land would be acquired by fee acquisitions, thus allowing the designers to overlook small farm boundaries and design for modules of 4 square miles.

Figures IV-41 thru IV-45 show the design modules for each irrigation method with the exception of furrow irrigation. Three modules were designed for center pivot spray irrigation to allow investigation of land coverages of 76, 91 and 95 percent. Furrow irrigation would be similar to the graded boarder method, Figure IV-45, except that the water travels in furrows graded down the slope and the dividing levees are not needed.

Costs estimated for each irrigation module appear in Tables IV-43 thru IV-48. The capital cost per irrigated acre are shown below:

Center Pivot Spray (76%)	$ 463,000
Center Pivot Spray (91%)	$ 550,000
Center Pivot Spray (95%)	$ 425,000
Fixed Set Spray	$ 2,703,000
Graded Boarder	$ 550,000
Furrow	$ 550,000

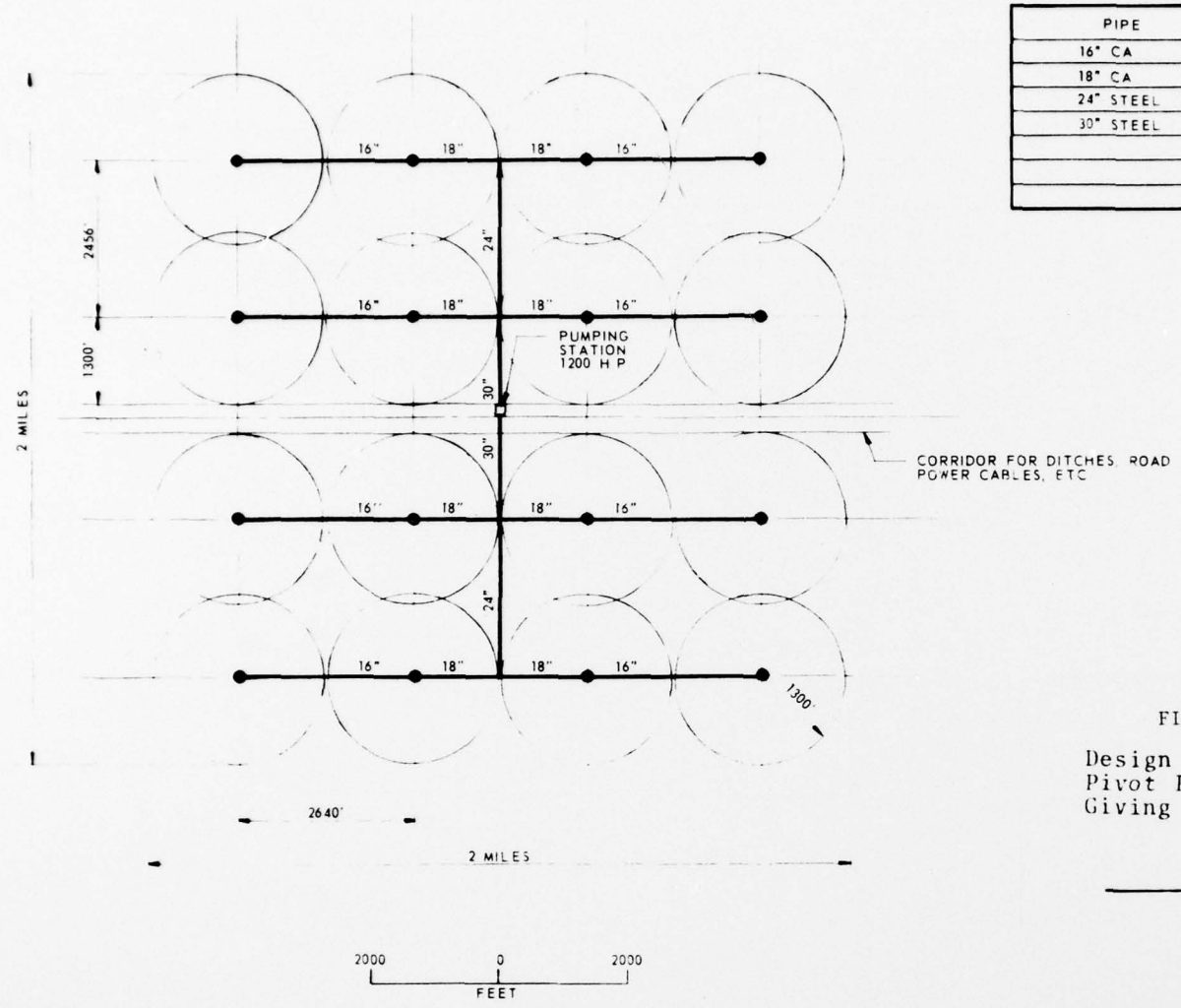

PIPE	QUANTITY
16" CA	22,400 LIN FT
18" CA	11,200 LIN FT
24" STEEL	5,200 LIN FT
30" STEEL	3,000 LIN FT

FIGURE IV-41

Design Module for Center Pivot Irrigation Rigs Giving 76⅜ Land Coverage

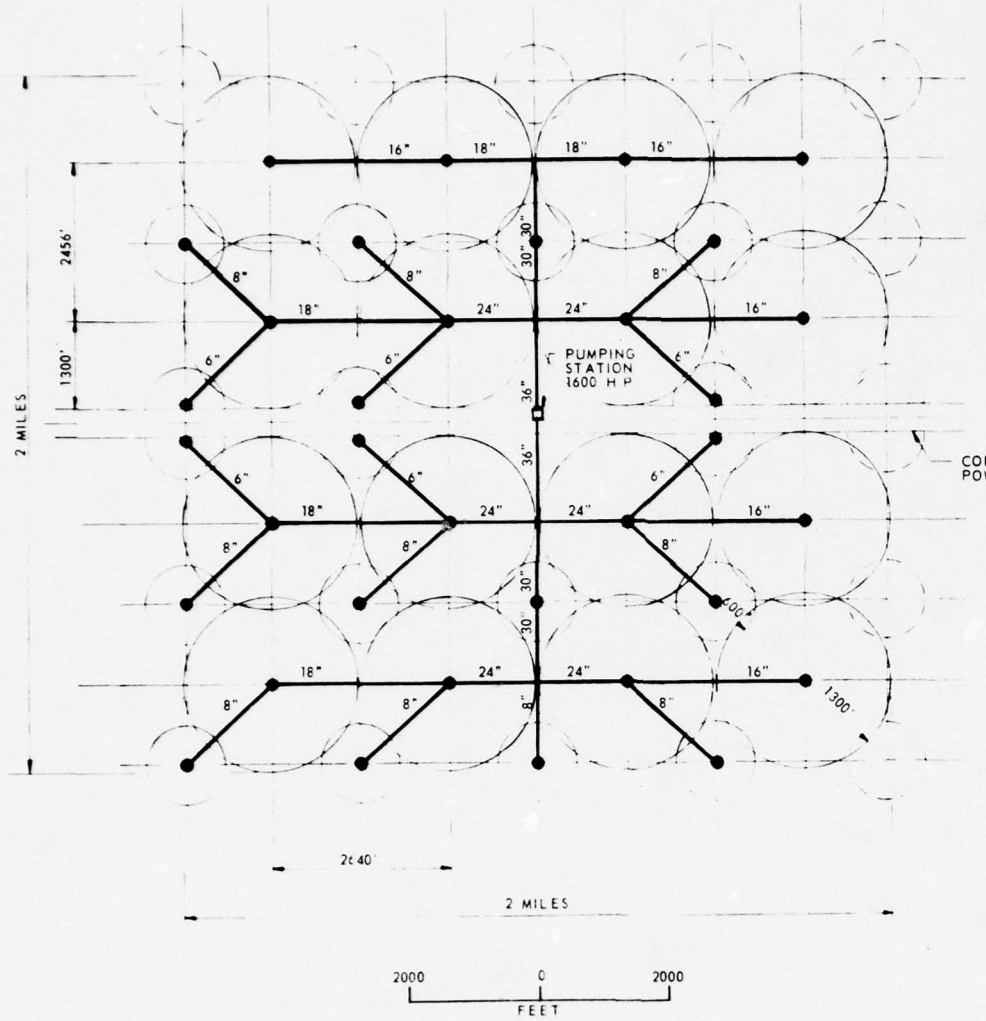

PIPE	QUANTITY
6" CA	12,000 LIN. FT
8" CA	19,200 LIN. FT
16" CA	14,000 LIN. FT.
18" CA	11,200 LIN. FT.
24" STEEL	8,400 LIN. FT
30" STEEL	5,200 LIN. FT
36" STEEL	3,000 LIN. FT

CORRIDOR FOR DITCHES, ROAD POWER CABLES, ETC

FIGURE IV-42
Design Module for Center Pivot Irrigation Rigs Giving 91% Land Coverage

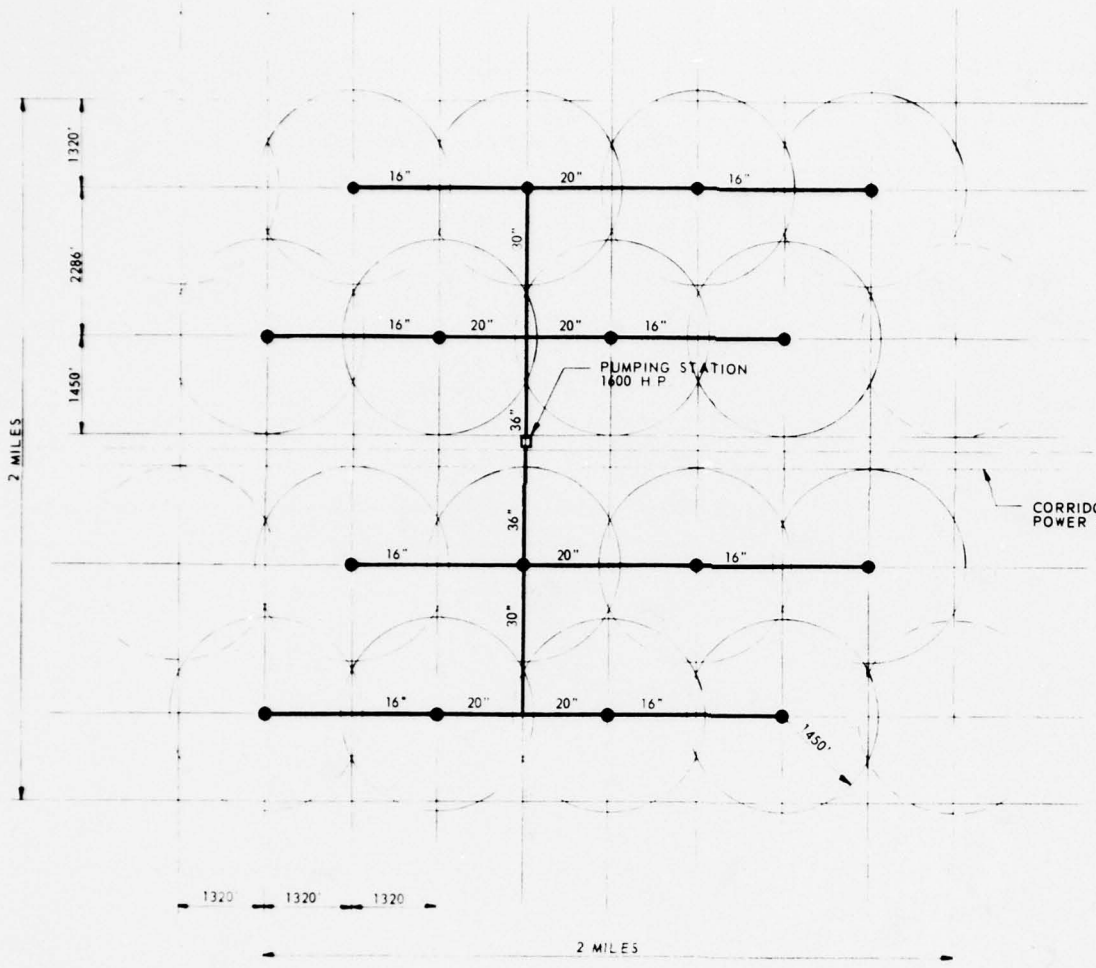

PIPE	QUANTITY
16" CA	21,000 LIN FT
20" CA	10,400 LIN FT
30" STEEL	5,000 LIN FT
36" STEEL	4,000 LIN FT

2000 0 2000
FEET

CORRIDOR FOR DITCHES, ROAD POWER CABLES, ETC

FIGURE IV-43

Design Module for Center Pivot Irrigation Rigs Giving 95% Land Coverage

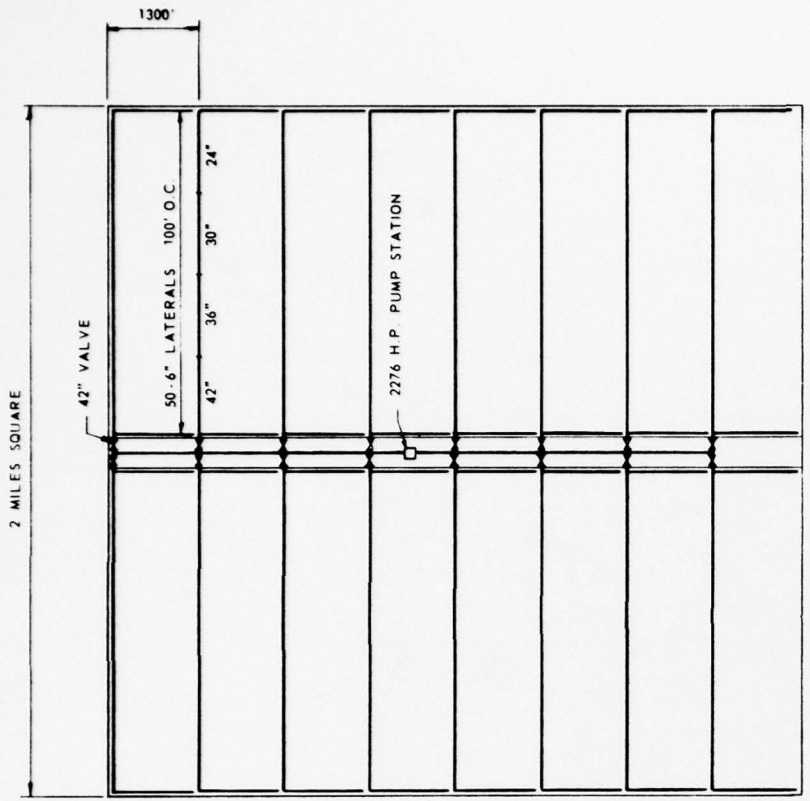

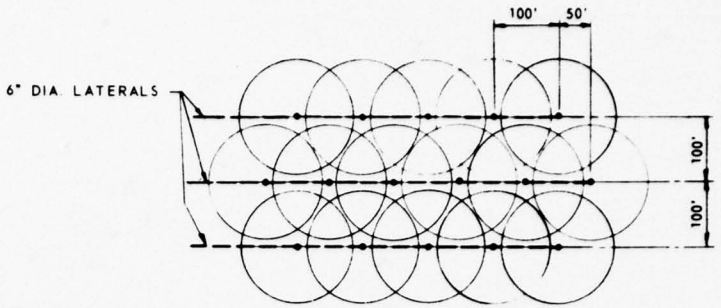

SPRINKLER OVER LAP PATTERN

6" DIA. LATERALS	1,040,000'
24" DIA. STEEL PIPE C.&W.	21,120'
30" DIA. STEEL PIPE C.&W.	21,120'
36" DIA. STEEL PIPE C.&W.	21,120'
42" DIA. STEEL PIPE C.&W.	25,940'
42" MOTOR OPERATED VALVE	16
1 PUMP STATION	2276 H.P.
SPRAY HEADS	10,400

FIGURE IV-44
Design Module for Fixed
Set Spray Irrigation

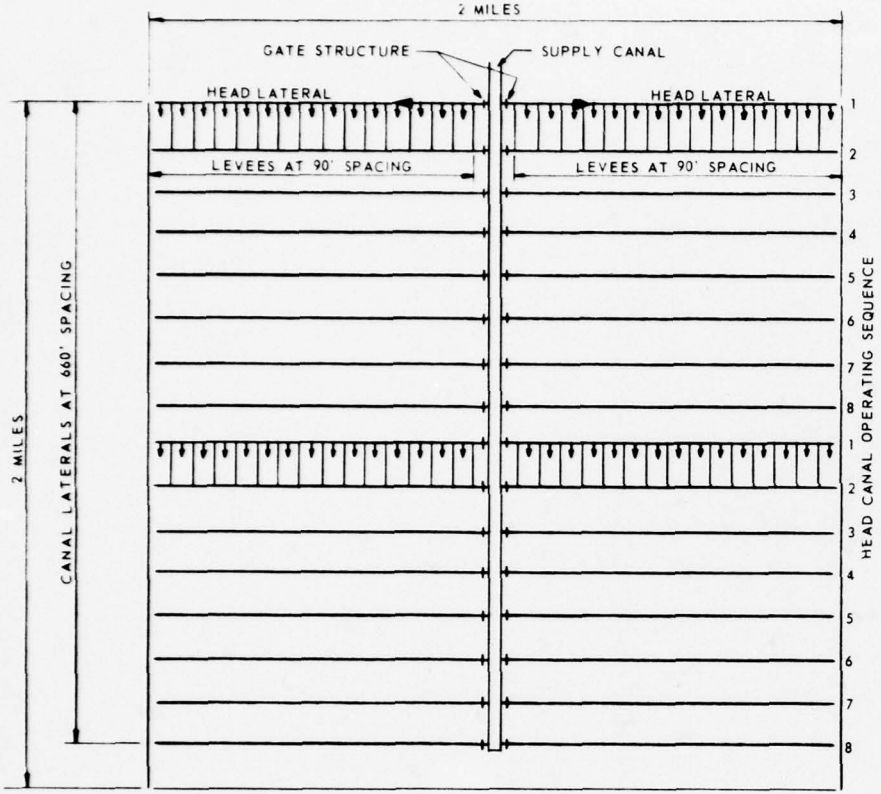

GRADED BORDER IRRIGATION

2 MILE SQUARE MODULE

2000 0 2000

FEET

LEVEE SEPARATING STRIPS HAVING 0% CROSS SLOPE

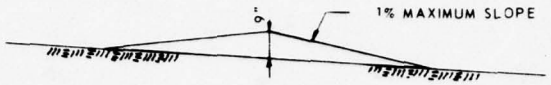

LEVEE SEPARATING STRIPS HAVING MAXIMUM OF 0.1% CROSS SLOPE

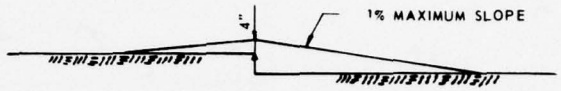

LEVEE SEPARATING STRIPS HAVING 0% CROSS SLOPE AT DIFFERENT ELEVATIONS

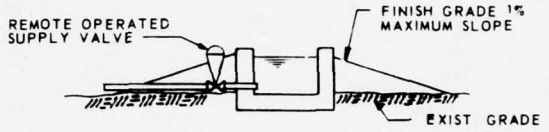

SECTION THROUGH HEAD LATERAL

FIGURE IV-45

Design Module for Graded Border Irrigation

TABLE IV-43

Total Costs for Design Module of Center Pivot Irrigation Rigs Giving 76% Land Coverage

Components	Units	Unit Cost	Cost
Irrigation Pumping Station	1-1200 HP	142,000	$142,000
Irrigation Rigs			
1300 ft Radius	16 ea.	18,000	288,000
Pressure Pipe			
16" CA	22,400 LF	17.28	387,000
18" CA	11,200 LF	23.87	267,000
24" Steel	5,200 LF	33.02	171,700
30" Steel	3,000 LF	42.70	128,100
Valves & Misc. Fittings	1 module	25,000	25,000
TOTAL			$1,408,800
Maintenance and Supplies			
Irrigation Pumping Station @ 1.0% Capital			$ 1,400
Irrigation Rigs @ 2.0% Capital			5,800
Pressure Pipe @ 0.1% Capital			1,000
Valves & Miscellaneous @ 3.0% Capital			800
Energy @ 0.0125/Kilowatt-hr			
Pumping Station - 1200 HP @ 2800 hrs			42,000
Irrigation Rigs - 120 HP @ 2800 hrs			4,200
Labor			
3.9 men at $16,500			64,400
Major Replacements			
Irrigation Pumping Station @ 0.0149 x Capital			2,100
Irrigation Rigs @ 0.01955 x Capital			5,600
Pressure Pipe @ 0.01955 x 1/2 Capital			9,500
TOTAL O&M			$136,800

TABLE IV-44

Total Costs for Design Module of Center Pivot Irrigation Rigs Giving 91% Land Coverage

Components	Units	Unit Cost	Cost
Irrigation Pumping Station	1-1600 HP	169,000	$169,000
Irrigation Rigs			
1300 ft Radius	16 ea.	18,000	288,000
600 ft Radius	18 ea.	8,500	153,000
Pressure Pipe			
6" CA	12,000 LF	5.48	65,700
8" CA	19,200 LF	6.68	128,300
16" CA	14,000 LF	17.28	241,900
18" CA	11,200 LF	23.87	267,300
24" Steel	8,400 LF	33.02	277,400
30" Steel	5,200 LF	42.70	222,000
36" Steel	3,000 LF	55.35	166,000
Valves & Misc Fittings	1 module	25,000	25,000
TOTAL			$2,003,600
Maintenance and Supplies			
Irrigation Pumping Station @ 1.0% Capital			$ 1,700
Irrigation Rigs @ 2.0% Capital			8,800
Pressure Pipes @ 0.1% Capital			1,400
Valves & Miscellaneous @ 3.0% Capital			800
Energy @ 0.0125/Kilowatt-hr			
Pumping Station - 1600 HP @ 2800 hrs			56,000
Irrigation Rigs - 200 HP @ 2800 hrs			7,000
Labor			
4.8 men at $16,500			79,200
Major Replacements			
Irrigation Pumping Station @ 0.0149 x Capital			2,500
Irrigation Rigs @ 0.01955 x Capital			8,600
Pressure Pipe @ 0.01955 x 1/2 Capital			13,700
TOTAL O&M			$179,700

TABLE IV-45

Total Costs for Design Module of Center Pivot Irrigation Rigs Giving 95% Land Coverage

Components	Units	Unit Cost	Cost
Irrigation Pumping Station	1-1600 HP	169,000	$169,000
Irrigation Rigs			
1450 ft Radius	16 ea.	20,000	320,000
Pressure Pipe			
16" CA	21,000 LF	17.28	362,900
20" CA	10,400 LF	29.12	302,800
30" Steel	5,000 LF	42.70	213,500
36" Steel	4,000 LF	55.34	221,360
Valves & Misc. Fittings	1 module .	25,000	25,000
TOTAL			$1,614,600
Maintenance and Supplies			
Irrigation Pumping Station @ 1.0% Capital			$ 1,700
Irrigation Rigs @ 2.0% Capital			6,400
Pressure Pipe @ 0.1% Capital			1,100
Valves & Miscellaneous @ 3.0% Capital			800
Energy @ 0.0125/Kilowatt-hr			
Pumping Station - 1600 HP @ 2800 hrs			56,000
Irrigation Rigs - 150 HP @ 2800 hrs			5,200
Labor			
3.9 men at $16,500			64,400
Major Replacements			
Irrigation Pumping Station @ 0.0149 x Capital			2,500
Irrigation Rigs @ 0.01955 x Capital			6,300
Pressure Pipe @ 0.01955 x 1/2 Capital			10,800
TOTAL O&M			$155,200

TABLE IV-46

Total Costs for Design Module of Fixed Set
Spray Irrigation (Underground Pipes)

Components	Units	Unit Cost	Cost
Irrigation Pumping Station	1-2300 HP	210,000	$210,000
Spray Heads	10,400 ea.	9.20	95,700
Spray Head Riser-2" pipe	93,600 LF	0.82	76,800
Pressure Pipe			
6" CA	1,040,000 LF	5.48	5,699,200
24" Steel	21,120 LF	33.02	697,400
30" Steel	21,120 LF	42.70	901,800
36" Steel	21,120 LF	55.34	1,168,800
42" Steel	25,940 LF	70.82	1,837,000
Valves			
42" motor operated	16 ea.	7500.00	120,000
Controller & Misc.	1 module	5000.00	5,000
TOTAL			$10,811,700
Maintenance and Supplies			
Irrigation Pumping Station @ 1.0% Capital			$ 2,100
Spray Heads, Risers, Valves & Controller @ 2.0% Capital			6,000
Pressure Pipe @ 0.1% Capital			10,300
Energy @ 0.0125/Kilowatt-hr			
Pumping Station - 2300 HP @ 3000 hrs			86,200
Labor			
2.8 men at $16,500			46,200
Major Replacements			
Irrigation Pumping Station @ 0.0149 x Capital			3,000
Spray Heads @ 0.10197 x Capital			9,800
Risers @ 0.07767 x Capital			6,000
Valves @ 0.07767 x Capital			9,300
Pressure Pipe @ 0.01955 x 1/2 Capital			103,000
TOTAL O&M			$281,900

TABLE IV-47

Total Costs for Design Module of
Graded Border Irrigation

Components	Units	Unit Cost	Cost
Concrete lined head ditch with flow control	160,000 L.F.	$ 12.00	$1,920,000
Gate Structure	32 each	2,500	80,000
Land Leveling (Change to 0.4% Slope)			
If - 0.1% Slope	2,500 acres	46.00	115,000
0.2% Slope	2,500 acres	38.00	95,000
0.4% Slope	2,500 acres	29.00	72,500
1.0% Slope	2,500 acres	76.00	190,000
2.0% Slope	2,500 acres	118.00	295,000
4.0% Slope	2,500 acres	230.00	575,000

		Slope of Land	
Maintenance and Services		1.0%	0.1%
Concrete lined head ditches with flow controls	@ 1.0% Capital	$ 19,200	$ 19,200
Gate Structure	@ 1.0% Capital	800	800
Land Leveling	@ 1.0% Capital	19,000	11,500
Labor			
3.9 men at $16,500		64,300	64,300
Replacements			
Concrete lined head ditch with flow controls	@ 0.01955 x Capital	37,600	37,600
Gate Structure	@ 0.01955 x Capital	1,600	1,600
TOTAL O&M		$142,500	$135,000

TABLE IV-48

Total Costs for Design Module of
Furrow Irrigation

Components	Units	Unit Cost	Cost
Concrete lined head ditch with flow control	160,000 L.F.	$ 12.00	$1,920,000
Gate Structure	32 each	2,500	80,000
Land Leveling (Change to 0.4% Slope)			
If - 0.1% Slope	2,500 acres	46.00	115,000
0.2% Slope	2,500 acres	38.00	95,000
0.4% Slope	2,500 acres	29.00	72,500
1.0% Slope	2,500 acres	76.00	190,000
2.0% Slope	2,500 acres	118.00	295,000
4.0% Slope	2,500 acres	230.00	575,000
Furrows	2,500 acres	5.00	12,500

Maintenance and Services		Slope of Land 1.0%	0.1%
Concrete lined head ditches with flow controls	@ 1.0% Capital	$ 19,200	$19,200
Gate Structure	@ 1.0% Capital	800	800
Land Leveling	@ 1.0% Capital	19,000	11,500
Furrow	@ 5.0% Capital	600	600
Labor			
3.9 men at $16,500		64,300	64,300
Replacements			
Concrete lined head ditch with flow controls	@ 0.01955 x Capital	37,500	37,500
Gate Structure	@ 0.01955 x Capital	1,600	1,600
Furrows	@ 0.179 x Capital	2,200	2,200
TOTAL O&M		$145,200	$137,700

A collection system, consisting of tile underdrain facilities to collect the percolated water and transportation facilities leading to reuse storage reservoirs, was developed at each site. Again modules were developed to represent a total system. Three modules were designed in all, each to meet a separate subsurface condition. Two of these designs assume that the water table is at or above the installed tile depth because of natural occurrences. The third is based on an artificial barrier being installed below the tile drain.

The tile system design was based on the following requirements:

1. Maintenance of 5 feet minimum depth from soil surface to water table.
2. Removal of 5 feet minimum depth from soil surface to water table.
3. Maintenance of depth of tile laterals to 10 feet or less.

The first underdrain design assumed a soil permeability of 0.2 inches/hr and a desired drainage rate of 0.02 inches/hour (0.48 inches/day). The resulting tile lateral spacing was approximately 33 feet on centers. The 0.2 inches/hour permeability was selected as it was the lowest permeability in the soil profiles selected for use. (See figure IV-46).

The next design, Figure IV-47, assumed a soil permeability of 0.5 inches/hour and the same desired drainage rate. This resulted in a tile lateral spacing of 55 feet on centers. The 0.5 inches per hour permeability was theorized in the initial investigations, as being maintainable once a good drainage system had been installed and was operational.

The last design again assumed a soil permeability of 0.2 inches per hour. An impervious asphaltic barrier was, however, designed at 1 foot depth below the tiles. (See Figure IV-48) This resulted in a tile spacing of 16.5 feet.

Costs of underdrain systems appear in Tables IV-49a thru IV-49c.

Other items included in the design of irrigation and collection systems were: holding and reuse ponds, pumping and transmission facilities to transport water to the holding ponds, and outfalls from the reuse ponds to the designated streams for recharge. In addition, stage-discharge studies were conducted on various streams in the area to determine their capability of accepting additional streamflows.

PIPE	QUANTITY
4" PLASTIC	3,163,000 L.F. /2 MI. SQ
12" CONC	6,000 L.F. /2 MI. SQ
15" CONC	4,560 L.F. /2 MI. SQ
18" CONC	8,400 L.F. /2 MI. SQ
21" CONC	12,000 L.F. /2 MI. SQ
24" CONC	10,650 L.F. /2 MI. SQ
30" CONC	2,640 L.F. /2 MI. SQ
36" CONC	2,640 L.F. /2 MI. SQ
48" CONC	2,640 L.F. /2 MI. SQ
1 PUMP STATION	160 H.P.

FIGURE IV-46

Design Module for Underdrain System with Tile Laterals Spaced at 33' Centers

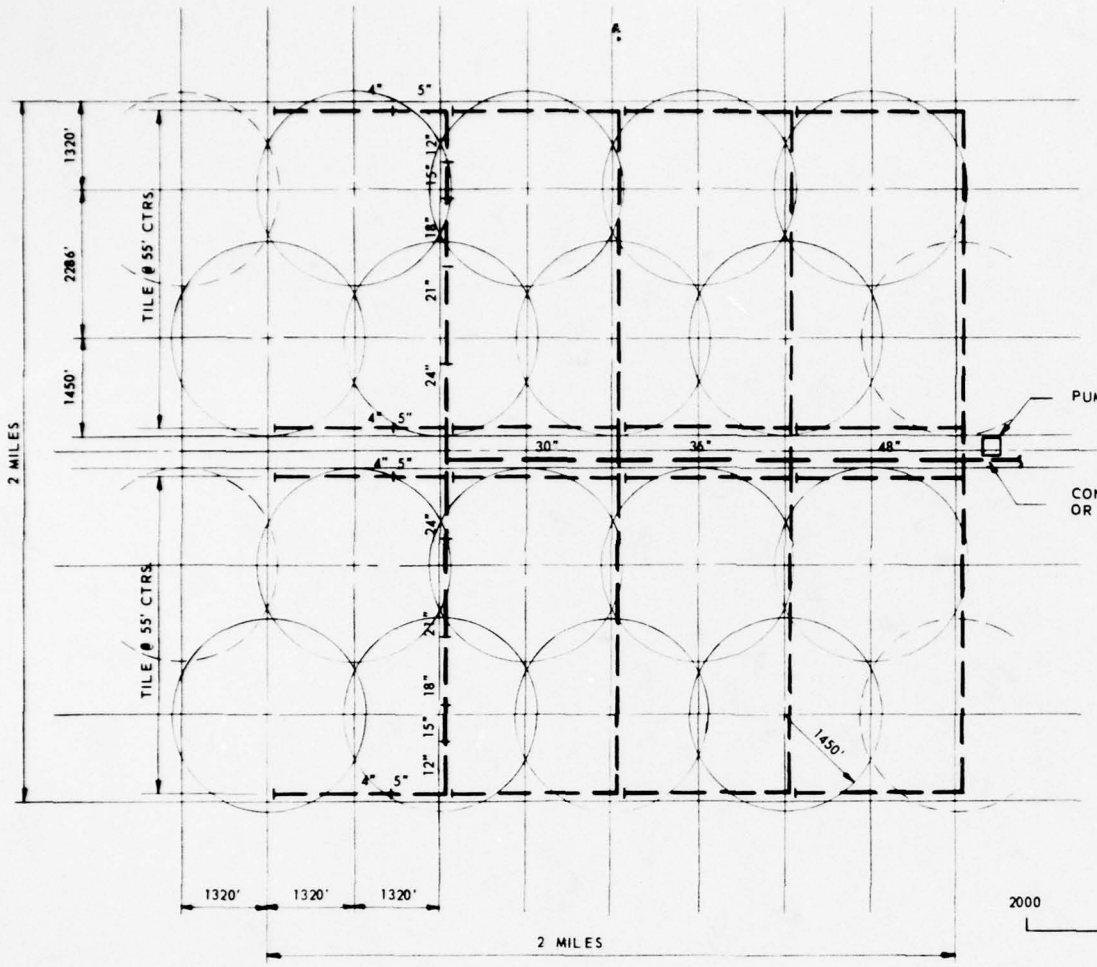

PIPE	QUANTITY
4" PLASTIC	1,324,000 L.F./2 MI. SQ.
5" PLASTIC	590,000 L.F./2 MI. SQ.
12" CONC.	6,000 L.F./2 MI. SQ.
15" CONC.	4,560 L.F./2 MI. SQ.
18" CONC.	8,400 L.F./2 MI. SQ.
21" CONC.	12,000 L.F./2 MI. SQ.
24" CONC.	10,650 L.F./2 MI. SQ.
30" CONC.	2,640 L.F./2 MI. SQ.
36" CONC.	2,640 L.F./2 MI. SQ.
48" CONC.	2,640 L.F./2 MI. SQ.
1 PUMP STATION	160 H.P.

FIGURE IV-47
Design Module for Underdrain System with Tile Laterals Spaced at 55' Centers

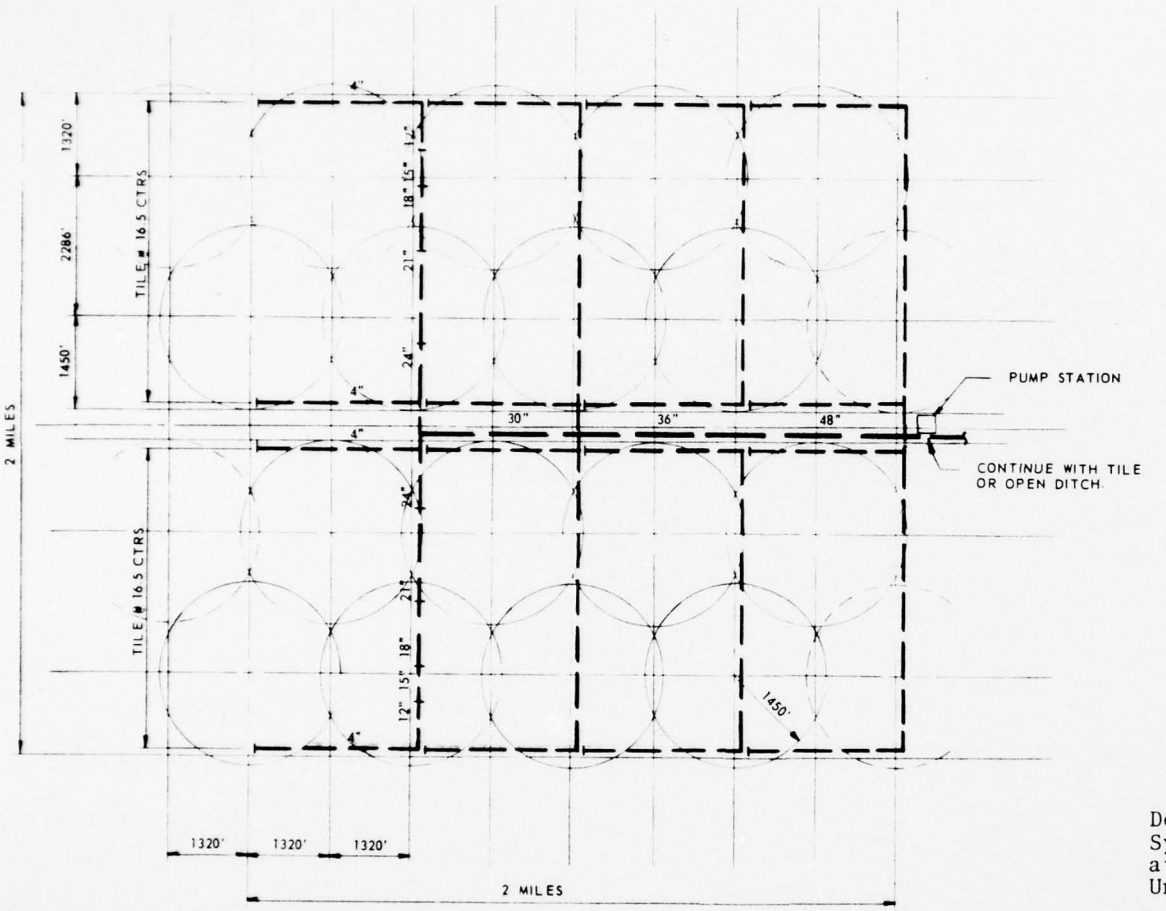

PIPE	QUANTITY
4" PLASTIC	6,324,000 L F 2 MI SQ
12" CONC	6,000 L F 2 MI SQ
15" CONC	4,560 L F 2 MI SQ
18" CONC	8,400 L F 2 MI SQ
21" CONC	12,000 L F 2 MI SQ
24" CONC	10,650 L F 2 MI SQ
30" CONC	2,640 L F 2 MI SQ
36" CONC	2,640 L F 2 MI SQ
48" CONC	2,640 L F 2 MI SQ
1 PUMP STATION	160 H P
ASPHALT BARRIER	2,500 AC

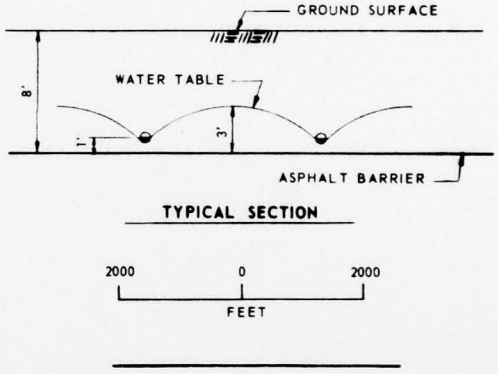

FIGURE IV-48
Design Module for Underdrain System with Laterals Spaced at 16.5' Centers and with Underground Asphalt Barrier

AD-A041 115 SOUTHEASTERN MICHIGAN WASTEWATER MANAGEMENT SURVEY 3/6
SCOPE STUDY DESIGN AND COST APPENDIX(U) CORPS OF
ENGINEERS DETROIT MICH DDTROIT DISTRICT MAY 74
UNCLASSIFIED F/G 13/2 NL

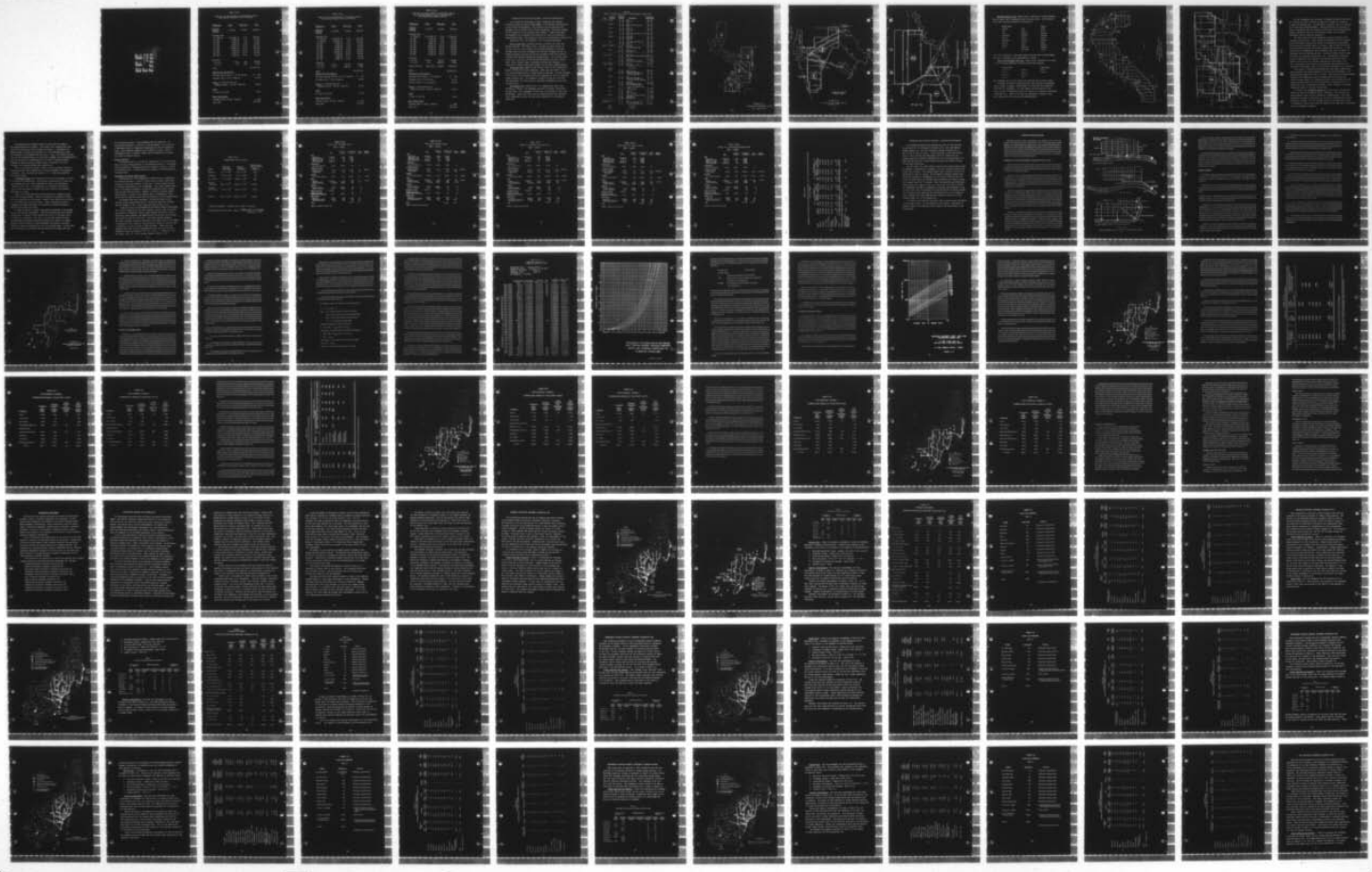

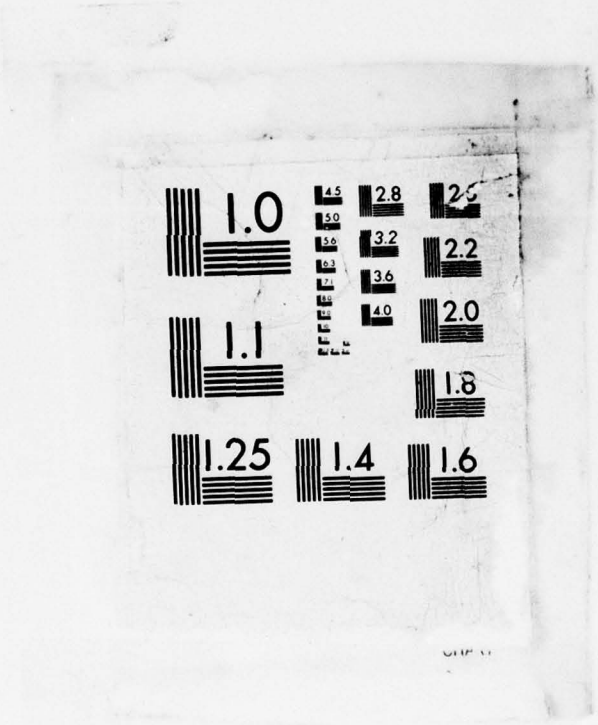
1.0
1.1
1.25
1.4
1.6
1.8
2.0
2.2
2.5
2.8
3.2
3.6
4.0
4.5
5.0
5.6
6.3

TABLE IV-49a

Total Costs for Design Module of Underdrain System with Laterals Spaced on 33.0 ft Centers

Components	Units	Unit Cost	Cost
Drainage Pumping Station	1-160 HP	43,000	$43,000
Drainage Pipe			
4" Plastic	3,163,000 LF	0.31	980,500
12" RCP	6,000 LF	5.54	33,200
15" RCP	4,560 LF	7.08	33,300
18" RCP	8,400 LF	9.51	79,900
21" RCP	12,000 LF	10.76	129,100
24" RCP	10,650 LF	13.32	141,900
30" RCP	2,640 LF	18.23	48,100
36" RCP	2,640 LF	24.74	65,300
48" RCP	2,640 LF	36.95	97,500
Clean-outs			
4 ft dia.	40 ea	521	20,800
5 ft dia.	3 ea	1000	3,000
TOTAL			$1,675,600
Maintenance and Supplies			
Drainage Pump Station @ 1.0% of Capital			$ 400
Drainage Pipe @ 2.0% of Capital			32,200
Energy @ 0.0125/Kilowatt-hr			
Pumping Station - 160 HP @ 5800 hrs			11,600
Labor			
0.3 men at $16,500			5,000
Major Replacement			
Drainage Pump @ 0.0149 x Capital			600
TOTAL O&M			$ 49,800

TABLE IV-49b

Total Costs for Design Module of Underdrain System with Laterals Spaced on 55.0 ft Centers

Components	Units	Unit Cost	Cost
Drainage Pumping Station	1-160 HP	43,000	$43,000
Drainage Pipe			
4" Plastic	1,324,000 LF	0.31	410,400
5" Plastic	590,000 LF	0.38	224,200
12" RCP	6,000 LF	5.54	33,200
15" RCP	4,560 LF	7.08	33,300
18" RCP	8,400 LF	9.51	79,900
21" RCP	12,000 LF	10.76	129,100
24" RCP	10,650 LF	13.32	141,900
30" RCP	2,640 LF	18.23	48,100
36" RCP	2,640 LF	24.74	65,300
48" RCP	2,640 LF	36.95	97,500
Cleanouts			
4 ft dia.	40 ea.	521.00	20,800
5 ft dia.	3 ea.	1,000.00	3,000
TOTAL			$1,329,700
Maintenance and Supplies			
Drainage Pumping Station @ 1.0% of Capital			$ 400
Drainage Pipe @ 2.0% of Capital			25,300
Energy @ 0.0125/Kilowatt-hr			
Pumping Station - 160 HP @ 5800 hrs			11,600
Labor			
0.3 men at $16,500			5,000
Major Replacement			
Drainage Pump @ 0.0149 x Capital			600
TOTAL O&M			$ 42,900

TABLE IV-49c

Total Costs for Design Module of Underdrain System with Lateral Spaced on 16.5 ft Centers and with Underground Asphalt Barrier

Components	Units	Unit Cost	Cost
Drainage Pumping Station	1-160 HP	43,000	$43,000
Drainage Pipe			
4" Plastic	6,324,000 LF	0.31	1,960,400
12" RCP	6,000 LF	5.54	33,200
15" RCP	4,560 LF	7.08	33,300
18" RCP	8,400 LF	9.51	79,900
21" RCP	12,000 LF	10.76	129,100
24" RCP	10,650 LF	13.32	141,900
30" RCP	2,640 LF	18.23	48,100
36" RCP	2,640 LF	24.74	65,300
48" RCP	2,640 LF	36.95	97,500
Cleanouts			
4 ft dia.	40 ea.	521.00	20,800
5 ft dia.	3 ea.	1,000.00	3,000
Asphalt Barrier	2500 acres	1,700.00	4,250,000
TOTAL			$6,905,500
Maintenance and Supplies			
Drainage Pump Station @ 1.0% Capital			$ 400
Drainage Pipe @ 2.0% Capital			51,800
Asphalt Barrier @ 2.0% Capital			85,000
Energy @ 0.0125/Kilowatt-hr			
Pumping Station - 160 HP @ 5800 hrs			11,600
Labor			
0.3 men at $16,500			5,000
Major Replacement			
Drainage Pump @ 0.0149 x Capital			600
TOTAL O&M			$154,400

Irrigation and Collection Systems - Detailed Investigations

In the detailed investigation stage, irrigation and drainage facilities design centered on development of the general sites selected in the initial investigation. The criteria for site selection was reviewed, with no change in the criteria resulting. There were changes in the boundaries of the selected sites however. Figure IV-40 shows the boundaries of irrigation sites selected for use in the detailed investigation stage. Soil types for each site are described in TABLE IV-50.

Individual sites are described in the following paragraphs:

The St. Clair Site, includes portions of Macomb, St. Clair and Sanilac Counties. See Figure IV-49. Although the major portion of the site is in St. Clair County, the northern extension of the site includes small portions of Speaker, Elk and Buel Townships and all of Fremont Township, with part of the site extending south into portions of Armada and Richmond Townships in Macomb County. In St. Clair county itself, all or portions of the following Townships are used: Berlin, Riley, Wales, Mussey, Emmett, Kenockee, Brockway and Greenwood. A large area in Lapeer County was reserved for potential sludge disposal.

The Monroe Site, Figure IV-50, includes parts of Ida, Raisinville, Exeter, Bedford and LaSalle Townships. Areas east and south of this site were excluded because of urban growth projections. An area northwest of this site, with acceptable soils, was reserved for use as a potential sludge disposal site. The remainder of Monroe County has soils that are undesirable for reasons such as unsuitable topography or poor soil characteristics.

The Lenawee Site, Figure IV-51, is a comparatively small area southeast of Adrian. The Townships involved are Palmyra, Blissfield and Deerfield. The topography of this area is described as "level and undulating". There were other areas in Lenawee County that contained level topography, but did not have soils appropriate for wastewater renovation.

TABLE IV-30

Summary of Predominant Soils Occurring in Proposed Wastewater Irrigation Sites

Site	Predominant Soils	Depth From Surface (Inches)	USDA Texture	Permeability (Inches/Hour)
St. Clair	Conover	0 - 12	Loam	0.8 - 2.5
		12 - 30	Clay loam	0.2 - 0.8
		30 - 60	Loam	0.8 - 2.5
	Parkhill	0 - 12	Loam	0.8 - 2.5
		12 - 36	Heavy loam and clay loam	0.2 - 0.8
		36 - 60	Loam	0.8 - 2.5
	Locke	0 - 12	Sandy loam	2.5 - 5.0
		12 - 29	Loam	0.8 - 2.5
		29 - 50	Sandy loam	2.5 - 5.0
	Blount	0 - 8	Loam	0.8 - 2.5
		8 - 28	Heavy silty clay loam, clay loam	0.2 - 0.8
		28 - 42	Clay loam	0.2 - 0.8
	Metamora	0 - 26	Sandy loam	2.5 - 5.0
		26 - 32	Light loam	0.8 - 2.5
		32 - 48	Clay loam	0.2 - 0.8
		48 - 60	Loam	0.8 - 2.5
	Capac	0 - 12	Fine sandy loam, sandy loam	2.5 - 5.0
		12 - 34	Clay loam	0.2 - 0.8
		34 - 48	Loam	0.8 - 2.5
Monroe	Selfridge	0 - 29	Loamy sand	5.0 - 10.0
		29 - 42	Clay loam	0.8 - 2.5
		42 - 60	Loam or light clay loam	0.2 - 0.8
	Pewamo	0 - 11	Loam	0.8 - 2.5
		11 - 34	Clay loam, clay	0.2 - 0.8
		34 - 48	Clay loam	0.2 - 0.8
Lenawee	Macomb	0 - 11	Sandy loam	2.5 - 5.0
		11 - 30	Heavy loam and gravelly clay loam	0.8 - 2.5
		30 - 42	Loam	0.8 - 2.5
	Brady	0 - 22	Loamy sand	2.5 - 10.0
		22 - 48	*Sandy loam*	0.8 - 2.5
		48 - 60	Stratified sand and gravel	>10.0
Huron-Tuscola	Londo (London)	0 - 10	Loam	0.8 - 2.5
		10 - 20	Clay loam	0.8 - 2.5
		20 - 60	Loam, light clay loam, or silt loam	0.2 - 0.8
	Parkhill		(See above)	
	Kibbie	0 - 11	Loam	0.8 - 2.5
		11 - 19	Heavy silt loam	0.8 - 2.5
		19 - 34	Light silty clay loam	0.2 - 0.8
		34 - 42	Stratified silt, fine sand, and very fine sand	0.8 - 2.5
	Colwood	0 - 18	Loam	0.8 - 2.5
		18 - 32	Light silty clay loam	0.2 - 0.8
		32 - 48	Stratified silt loam, silt, fine sand, and very fine sand	0.8 - 2.5
	Boyer	0 - 15	Loamy sand	2.5 - 10.0
		15 - 24	Sandy loam	2.5 - 5.0
		24 - 30	Gravelly sandy clay loam	2.5 - 5.0
		30 - 48	Stratified sand and gravel	>10.0
	Mancelona	0 - 48	Loamy sand and gravelly loamy sand	5.0 - 10.0
		48 - 60	Silty clay loam	0.2 - 0.8
	Iosco	0 - 14	Loamy sand	5.0 - 10.0
		14 - 30	Sand	10.0
		30 - 42	Silty clay loam	0.2 - 0.8
	Brevort	0 - 22	Loamy sand and loamy fine sand	5.0 - 10.0
		22 - 28	Sandy loam	2.5 - 5.0
		28 - 34	Sand and gravel	>10.0
		34 - 44	Clay loam	0.8 - 2.5
Fulton-Williams	Morley	0 - 9	Loam	0.8 - 2.5
		9 - 32	Silty clay loam, clay loam, or silty clay loam	0.2 - 0.8
		32 - 60	Silty clay loam or clay loam	0.2 - 0.8
	Blount		(See above)	
	Pewano		(See above)	

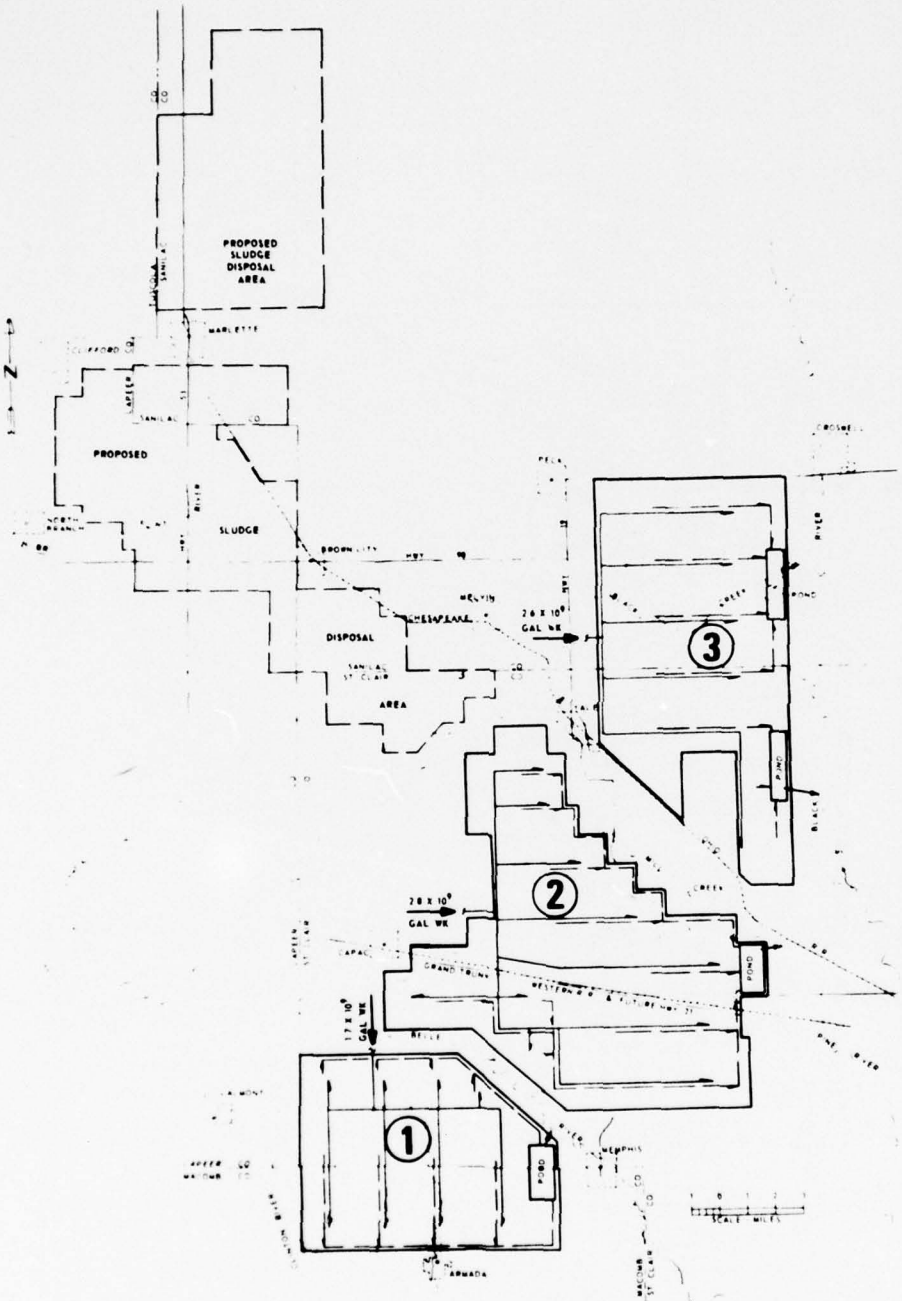

FIGURE IV-49
WASTEWATER TREATMENT DESIGN
ST. CLAIR SITE

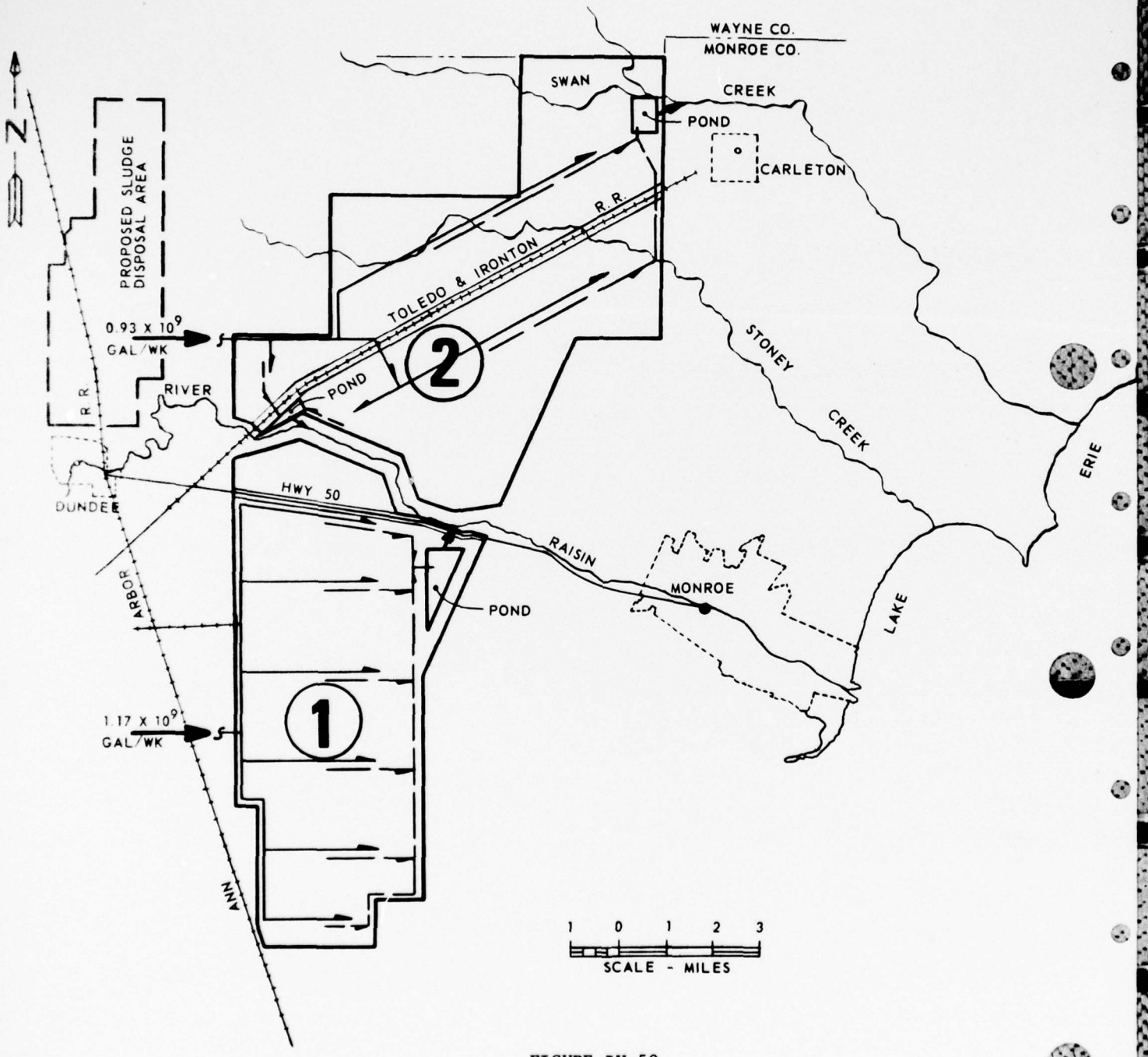

FIGURE IV-50

WASTEWATER TREATMENT DESIGN
MONROE SITE

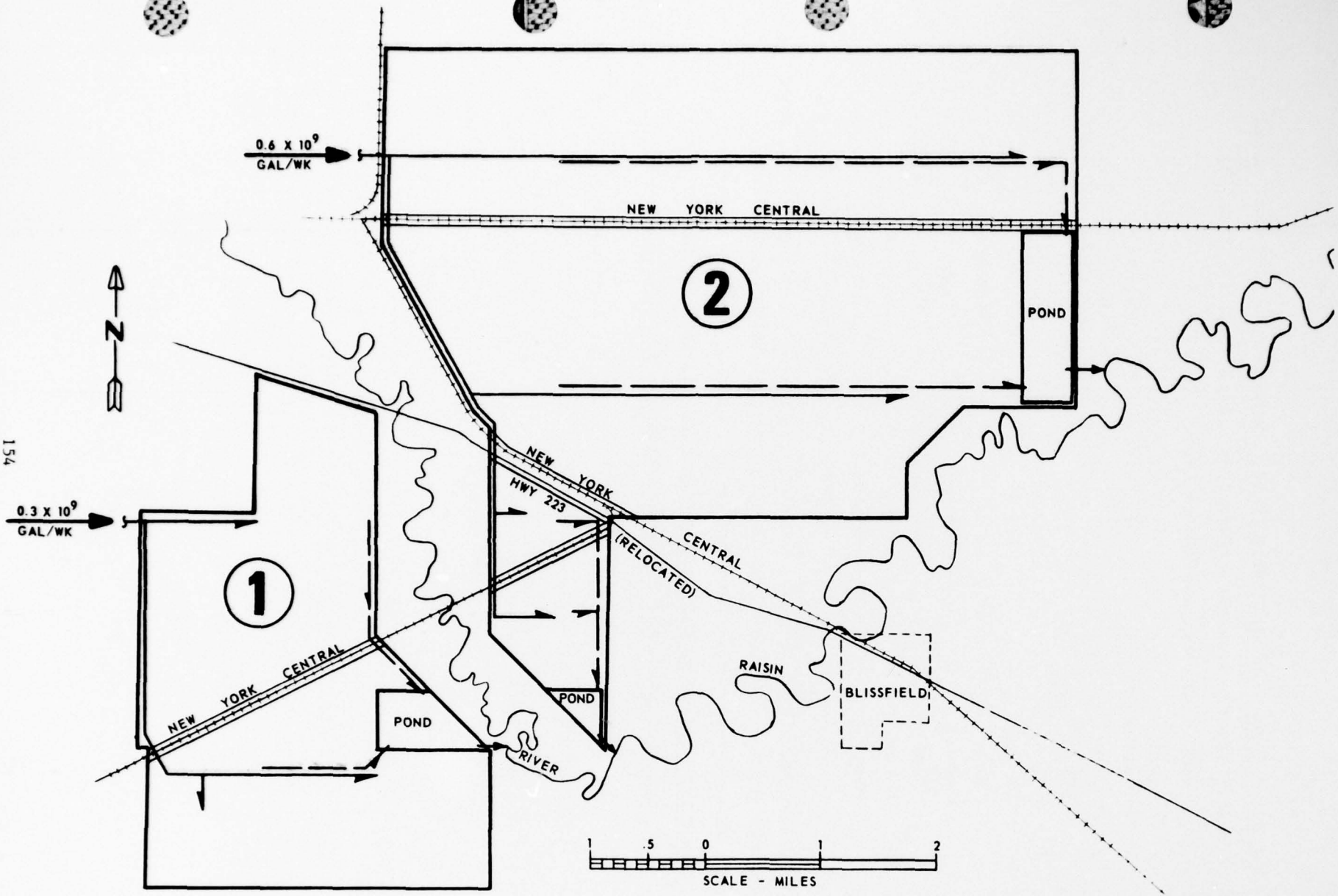

FIGURE IV-51

WASTEWATER TREATMENT DESIGN

LENAWEE SITE

The Huron-Tuscola Site, Figure IV-52, consists of a long continuous belt of nearly level topography inalnd from Lake Huron. The Townships in the two Counties involved are listed below.

Huron County		Tuscola
Sherman	Lake	Wisner
Paris	Hume	Akron
Sigel	McKinley	Columbia
Sand Beach	Chandler	Elmwood
Lincoln	Meade	Gilford
Bloomfield	Fairhaven	Fairgrove
Bubicon	Winsor	Almer
Dwight	Oliver	Ellington
Huron	Sebewaing	Denmark
	Brookfield	Juniata

Other site prospects in Huron and Tuscola Counties were rejected mainly because of topography, soil permeability, or both.

The Fulton-Williams, Ohio site, Figure IV-53, includes all or parts of the following Townships in Fulton and Williams Counties.

Williams County		Fulton County
North West	Madison	Gorham
Florence	Jefferson	Franklin
Bridgewater	Mill Creek	
Superior	Brady	

The topography of the soils within the selected site is nearly level.

Although some areas of potential site land was found in Washtenaw County, large contiguous areas capable of being used for wastewater sites were not available. For this reason, in this portion of the study, no part of Washtenaw County was utilized as a potential wastewater irrigation site. Table IV-50 shows the wastewater irrigation sites used, along with soil textures and permeabilities.

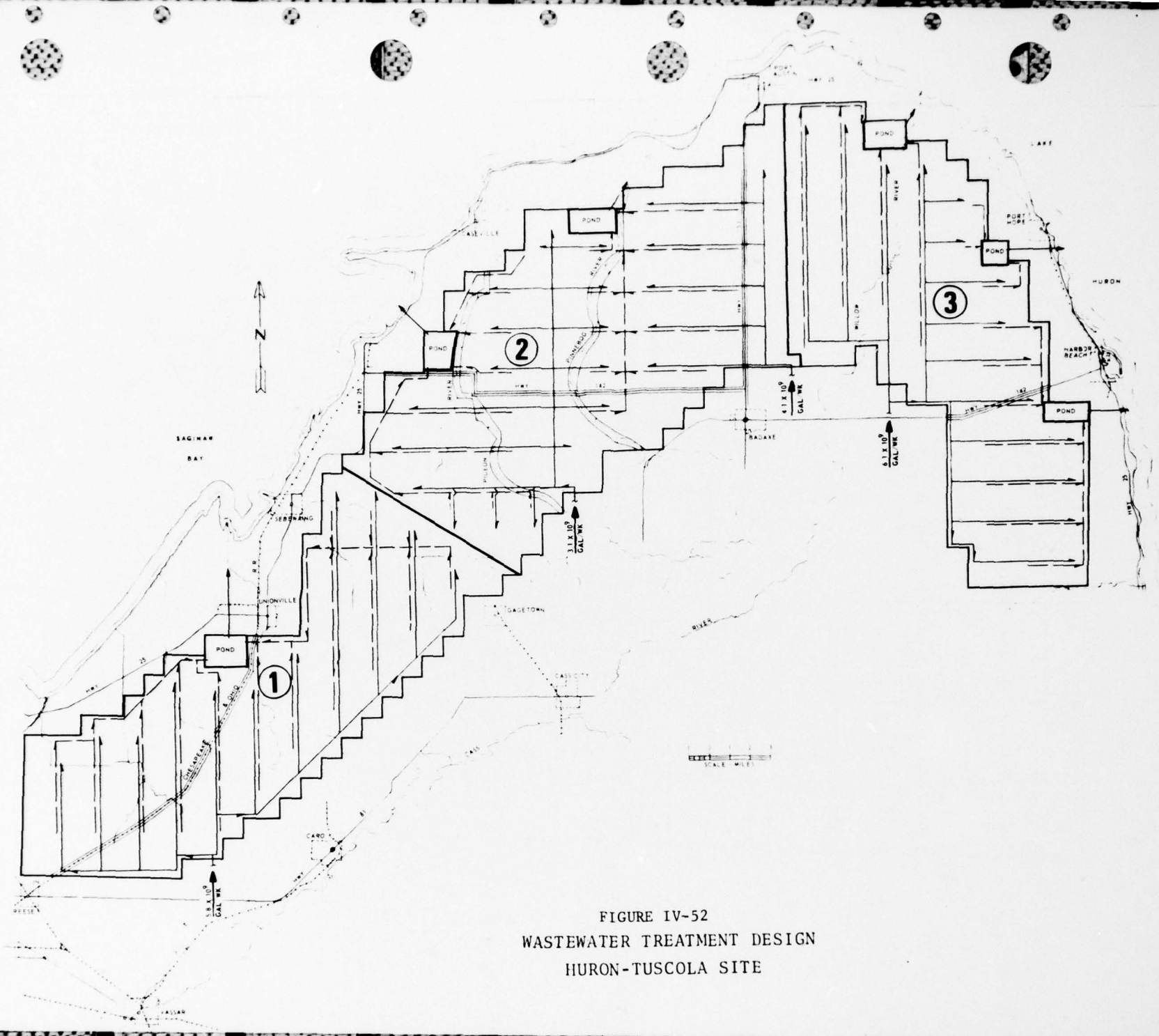

FIGURE IV-52
WASTEWATER TREATMENT DESIGN
HURON-TUSCOLA SITE

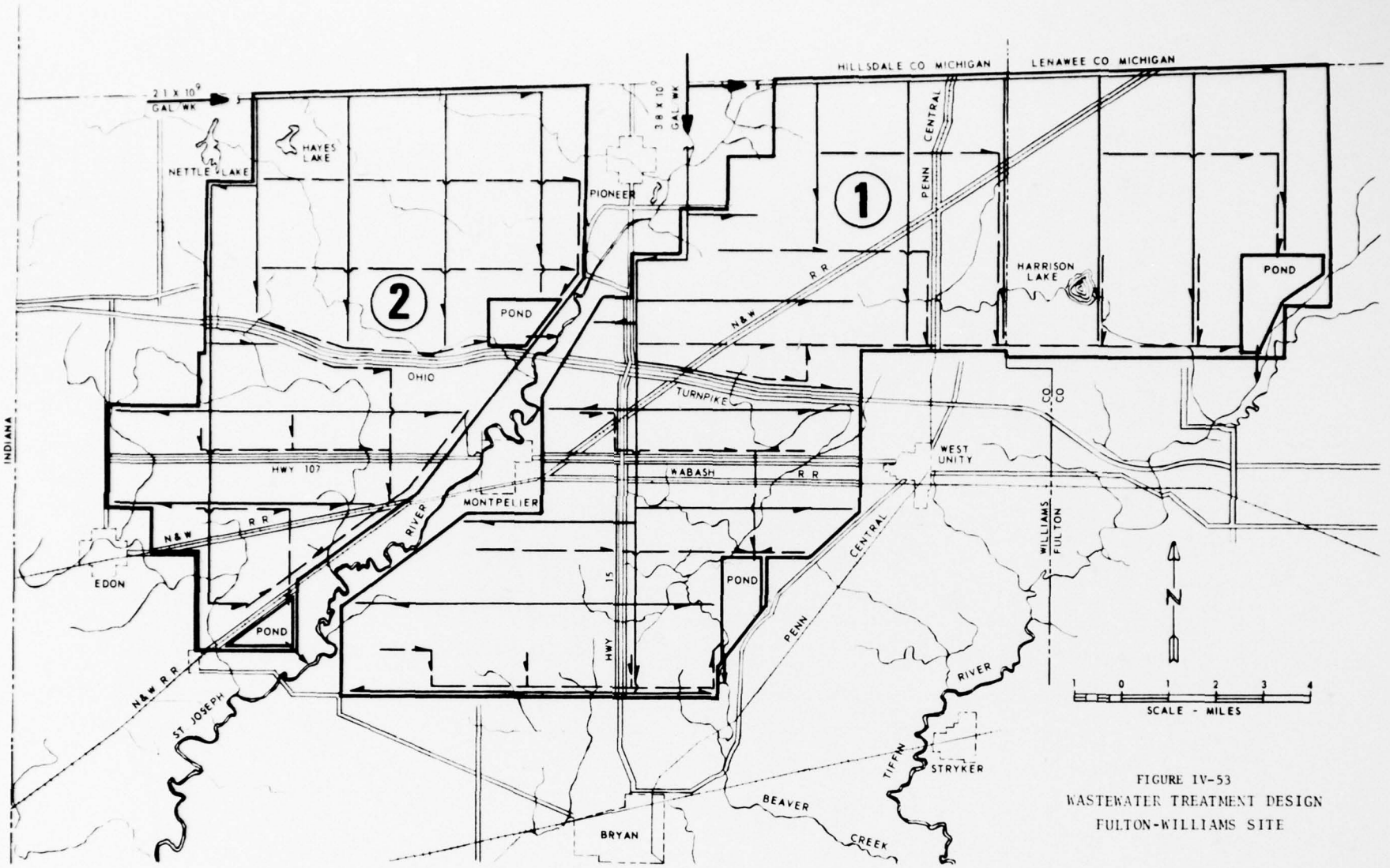

FIGURE IV-53
WASTEWATER TREATMENT DESIGN
FULTON-WILLIAMS SITE

For the irrigation sites selected, an average wastewater application of 70 inches per year (2 inches per week for 35 weeks) was selected as being the optimum rate. The wastewater irrigation period is expected to be from April through November. Factors affecting the selection of rate of application and the irrigation period were soil characteristics, climate, potential crops, the constituents present in the applied wastewater, and the expected renovation.

The soils selected for the irrigation sites are medium to fine textured, mineral soils. These soils are frequently "wet" with groundwater fluctuating from near the surface in the spring to down around 10 feet below the surface later in the year. Many of these soils have had tile drains installed to increase agricultural production. If only existing soil permeabilities were considered, more than two inches of wastewater could be applied per week. Surface slacking, however, tends to reduce the potential infiltration rate. Additionally, monovalent cations (especially Na) contained in the applied wastewater tend to disperse the surface soil, further reducing the infiltration rate. Thus, considering these factors, two inches per week application was considered as the upper limit for the potential wastewater sites selected.

The climate of Southeastern Michigan has mean weekly temperatures above freezing from about mid-March to the last week in November. The growing season ranges from 150 to 180 days. Since period of above-freezing average daily temperatures and soil temperatures is long than the nominal growing season, the irrigation period could be longer than the present growing season, with the consideration of another factor, of normal snow cover varying from mid-March to early December, an optimum irrigation season of 35 weeks was selected.

A center pivot irrigation system with land cells is the selected method for the four irrigation sites in Michigan. This selection is based primarily upon cost and reliability considerations. The design giving 95% coverage is preferred over the other considered center pivot irrigation systems. The 95% coverage design has the greatest overlap of irrigation circles, but allows the greatest land usage with a reasonable cost for irrigation equipment.

The graded border irrigation method is selected for design at the Fulton-Williams site (Ohio). This method costs slightly more than the 95% coverage center pivot irrigation systems. A requirement for graded border irrigation is relatively low soil permeabilities, which are provided by the Michigan and Ohio soils. Hence, this method utilizes the low soil permeabilities to an advantage; whereas, the low permeabilities must be considered is disadvantage for the spray irrigation methods. Compared to spray irrigation, graded border is expected to be less reliable for producing uniform water application.

Fixed set irrigation system is likely the most reliable system for producing uniform water application and high performance for wastewater renovation. But, the fixed set system is 3 - 4 times more expensive than other methods.

A drainage system using a perforated tile lateral spacing of 33 feet is selected for underdrains. This spacing is based upon 0.2 inches per hour permeability, the lowest permeability found in the wastewater irrigation site soils. The underdrains are required to maintain at least a five foot depth of aerobic soil and to collect the renovated wastewater for reuse.

Many of the farms presently existing within the irrigation sites have tile drainage systems. These tile systems are necessary to drain the soils especially in the spring. Normally these farm tiles are placed 30 - 48 inches below the soil surface. Hence, existing tile drain systems are believed unsuitable for wastewater renovation because of insufficient aerobic soil depth.

An asphalt barrier to insure that applied wastewater is intercepted by the tiles was not recommended. Applied wastewater must pass through several feet of medium to fine textured soils even if the water table is below the tile drains. Such soils are believed highly effective for wastewater renovation and should eliminate the need for an asphalt barrier. With 70 inches of annual wastewater application, the water table will likely be maintained at the tile drainage depth. In this case, the tile drains will intercept applied wastewater and negate the need

for the asphalt barrier. The groundwater will be monitored. If unrenovated wastewater is detected in the groundwater, the irrigation of wastewater would be temporarily suspended and corrective measures taken. These measures probably will be similar to those taken if contaminated water is detected coming from the underdrains installed just above an asphalt barrier.

Reuse Facilities

An unlined channel is selected for transmission of the renovated water from the drainage modules to the storage facilities. The storage facility should be a holding pond sized to retain at least 6 - 10 days of underdrain water. Stream outfalls are required for discharging the renovated water.

Groundwater and Water Runoff Control

Observation wells are recommended for monitoring the groundwater. For planning purposes, a cluster of three wells is spaced about every three miles along the perimeter of the site. A ditch around the site to intercept groundwater is not recommended. Very little lateral movement of the applied wastewater is expected, especially under a buffer strip of about 300 feet width. However, a ditch to intercept upland runoff before it reaches the irrigation site is recommended. Water runoff and soil erosion control must be practiced on the irrigation site.

The design flows were determined for each site based on the selected average application rate of 2 inches per week over 35 weeks and the coverage of 91%. Those flows are shown in Table IV-51.

Irrigation costs were determined by the method presented previously. Site related components of the land treatment concept, such as effluent and percolate transmission canals, reuse storage facilities, outfall structures, pump stations, and administrative facilities, were designed and costed for specific size sites. From these specific designs, unit type estimated costs were developed, some related back to the number of modules per site, others to cost per mile of canal, or cost per mile of perimeter, or cost per acre of land purchased. These unit cost estimates have been used in developing the total costs for the five irrigation sites (see Tables IV-52a thru IV-52e). A summary of costs at interest rates of 7 and 10 percent appear in Table IV-52f.

Table IV-51

Wastewater Application

Site	Gallons per Week	Annual Gallons*	Equivalent Daily Rate** (MGD)
Monroe	2.1×10^9	73.5×10^9	201
Lenawee	0.9×10^9	31.5×10^9	86
St. Clair	7.1×10^9	248.5×10^9	681
Huron-Tuscola	19.1×10^9	668.5×10^9	1,832
Fulton-Williams	5.9×10^9	206.5×10^9	566
TOTALS	35.1×10^9	1228.5×10^9	3,366

*Annual Gallons = gallons per week x 35 weeks

**Equivalent Daily Rate (MGD) = $\frac{\text{Weekly rate x 35 weeks}}{365 \text{ days} \times 10^6}$

TABLE IV-52a

Costs for Lenawee Site

(M$ = 1000)

	Unit	Unit Cost ($)	Capital Cost (M$)	O&M (M$/Yr)	Energy (MWH/Yr*)
Land					
Acquisition	18,300 Ac	960	17,568		
Family Relocation	305 Fam	5,000	1,525		
Legal Adm. + 10%			1,909		
Woodland Clearing	1,010 Ac	380	384		
Site Preparation	18,300 Ac	70	1,281		
Transmission					
Clay Lined Channels	19.8 Mi	42,400	840	8	
Irrigation Method					
Center Pivot-95%	6 Mod	1,615	9,690	931	300,000
Runoff Control-Land Cells	6 Mod	100	600	90	
Drainage					
33 ft Lateral Spacing	6 Mod	1,675	10,050	299	6,000
Reuse					
Pumping	2,710 HP	80	217	206	16,000
Unlined Channels	13.6 Mi	16,560	225	2	
Storage Facilities	0.6 Sq Mi	1,200	720	7	
Outfalls					
Unlined Channels	0.9 Mi	40,000	36	.4	
Outfall Structures	3 ea	20,000	60	.6	
Observation Wells	2,400 Ft	8	19	.2	
Upland Ditches for Surface Water Collection	10 Mi	15,000	150	1.5	
General Site					
Electrical	6 Mod	100	600	18	
Field Service Bldgs.	6 Mod	5,400	32	2	
Site Administration	1 Site	100	102	155	
TOTAL			46,208	1,721	

*MWH/Yr = megawatt hours per year

TABLE IV-52b

Costs for Monroe Site

(M$ = 1000)

	Unit	Unit Cost ($)	Capital Cost (M$)	O&M (M$/Yr)	Energy (MWH/Yr*)
Land					
Acquisition	41,040 Ac	1,084	44,487		
Family Relocation	1,391 Fam	5,000	6,955		
Legal Adm. + 10%			5,144		
Woodland Clearing	2,520 Ac	380	958		
Site Preparation	41,040 Ac	100	4,104		
Transmission					
Clay Lined Channels	42.4 Mi	42,400	1,798	18	
Irrigation Method					
Center Pivot-95%	16 Mod	1,615	25,840	2,483	784,000
Runoff Control-Land Cells	16 Mod	77	1,232	203	
Drainage					
33 ft Lateral Spacing	16 Mod	1,675	26,800	797	15,000
Reuse					
Pumping	6,750 HP	80	540	513	40,000
Unlined Channels	34.2 Mi	16,560	566	5.7	
Storage Facilities	1.6 Sq Mi	1,200	1,920	19.2	
Outfalls					
Unlined Channels	0.6 Mi	40,000	24	.2	
Outfall Structures	2 ea	20,000	40	.4	
Observation Wells	4,400 Ft	8	35	.4	
Upland Ditches for Surface Water Collection	22 Mi	15,000	330	3.3	
General Site					
Electrical	16 Mod	100	1,600	46	
Field Service Buildings	16 Mod	5,400	86	5	
Site Administration	1 Site	102	102	202	
TOTAL			122,561	4,296	

*MWH/Yr = megawatt hours per year

TABLE IV-52c

Costs for Huron-Tuscola Site

(M$ = 1000)

	Unit	Unit Cost ($)	Capital Cost (M$)	O&M (M$/Yr)	Energy (MWH/Yr*)
Land					
Acquisition	388,970 Ac	664	258,276		
Family Relocation	5,298 Fam	5,000	26,490		
Legal Adm. + 10%			28,476		
Woodland Clearing	23,200 Ac	380	8,816		
Site Preparation	388,970 Ac	45	17,504		
Transmission					
Clay Lined Channels	302 Mi	59,000	17,818	178	
Irrigation Method					
Center Pivot-95%	145 Mod	1,615	234,175	22,504	7,105,000
Runoff Control-Land Cells	145 Mod	100	14,500	2,175	
Drainage					
33 ft Lateral Spacing	145 Mod	1,675	242,875	7,221	134,600
Reuse					
Pumping	62,500 HP	80	5,000	4,750	363,000
Unlined Channels	275 Mi	18,000	4,950	50	
Storage Facilities	14.5 Sq Mi	1,200	17,400	174	
Outfalls					
Unlined Channels	6.6 Mi	40,000	264	2.6	
Outfall Structures	6 ea	20,000	120	1.2	
Observation Wells	13,400 Ft	8	107	1.1	
Upland Ditches for Surface Water Collection	33 Mi	15,000	495	5	
General Site					
Electrical	145 Mod	100	14,500	420	
Field Service Buildings	145 Mod	5,400	783	44	
Site Administration	1 Site	102	102	407	
TOTAL			892,651	37,933	

*MWH/Yr = megawatt hours per year

TABLE IV-52d

Cost for St. Clair Site

(M$ = 1000)

	Unit	Unit Cost ($)	Capital Cost (M$)	O&M (M$/Yr)	Energy (MWH/Yr*)
Land					
Acquisition	149,220 Ac	611	91,173		
Family Relocation	2,130 Fam	5,000	10,650		
Legal Adm. + 10%			10,182		
Woodland Clearing	14,200 Ac	380	5,396		
Site Preparation	149,220 Ac	45	6,715		
Transmission					
Clay Lined Channels	112 Mi	42,400	4,749	47	
Irrigation Method					
Center Pivot-95%	54 Mod	1,615	87,210	8,381	2,646,000
Runoff Control-Land Cells	54 Mod	100	5,400	810	
Drainage					
33 ft Lateral Spacing	54 Mod	1,675	90,450	2,690	50,000
Reuse					
Pumping	23,090 HP	80	1,847	1,756	133,000
Unlined Channels	116 Mi	15,560	1,920	19	
Storage Facilities	5.3 Sq Mi	1,200	6,360	64	
Outfalls					
Unlined Channels	1.9 Mi	40,000	76	.8	
Outfall Structures	4 ea	20,000	80	.8	
Observation Wells	9,000 Ft	8	72	.7	
Upland Ditches for Surface Water Collection	10 Mi	15,000	150	1.5	
General Site					
Electrical	54 Mod	100	5,400	156	
Field Service Buildings	54 Mod	5,400	292	16	
Site Administration	1 Site	102	102	272	
TOTAL			328,224	14,215	

*MWH/Yr = megawatt hours per year

TABLE IV-52e

Costs for Fulton-Williams Site

(M$ = 1000)

	Unit	Unit Cost ($)	Capital Cost (M$)	O&M (M$/Yr)	Energy (MWH/Yr*)
Land					
Acquisition	114,000 Ac	677	77,178		
Family Relocation	2,987 Fam	5,000	14,935		
Legal Adm. + 10%			9,211		
Woodland Clearing	15,680 Ac	380	5,958		
Site Preparation	114,000 Ac	45	5,130		
Transmission					
Clay Lined Channels	144 Mi	53,070	7,642	77	
Irrigation Method					
Graded Border	49 Mod	2,150	105,350	6,615	2,400,000
Drainage					
33 ft Lateral Spacing	49 Mod	1,675	82,075	2,440	45,500
Reuse					
Pumping	21,100 HP	80	1,688	1,604	122,000
Unlined Channels	106 Mi	16,560	1,755	18	
Storage Facilities	4.9 Sq Mi	1,200	5,880	59	
Outfalls					
Unlined Channels	1.2 Mi	40,000	48	.5	
Outfall Structures	4 ea	20,000	80	.8	
Observation Wells	6,800 Ft	8	54	.5	
Upland Ditches for Surface Water Collection	36 Mi	15,000	540	5.4	
General Site					
Electrical	49 Mod	10	490	14	
Field Service Buildings	49 Mod	5,400	265	15	
Site Administration	1 Site	102	102	271	
TOTAL			322,791	11,120	

*MWH/Yr = megawatt hours per year

TABLE IV-52f

Summary of Capital and Annualized Costs at 7% and 10% Interest Rates
($ in 1000)

Site	Capital	7% Interest O&M	7% Interest Capital Recovery	7% Interest Total Annual Cost	10% Interest O&M	10% Interest Capital Recovery	10% Interest Total Annual Cost
Monroe	122,561	4,236	8,881	13,117	4,150	12,366	16,516
Lenawee	46,208	1,698	3,348	5,046	1,666	4,662	6,328
St. Clair	328,224	14,014	23,783	37,797	13,721	33,118	46,839
Huron-Tuscola	892,651	37,396	64,681	102,077	36,610	90,068	126,678
Fulton-Williams	322,791	10,957	23,389	34,346	10,715	32,570	43,285
Project Admin. & Labor	610	609	44	653	607	62	669
TOTAL	1,713,045	68,910	124,126	193,036	67,469	172,846	240,315
Annual wastewater application of 1228 x 10^9 gal.							
Cost per million gallons wastewater treated (Dollars/MG)	1,395	56	101	157	55	141	196

Irrigation and Collection Systems - Alternative Development

The designs prepared by Dow Engineering could for the most part be used directly for estimation of system costs, land requirements, energy demands, etc. for land irrigation systems requiring all or part of one of the five sites. It was necessary to make some adjustments to the operation and maintenance costs for cases where the average annual flow differed significantly from the design annual flow. That would be the case if storm runoff accounted for a major portion of the total design flow.

In this study, the storm runoff collection and storage system would be capable of delivering for treatment a 25 year frequency annual storm runoff (16.3 inches). The average annual runoff collected would be an equivalent of only 7.3 inches. The irrigation treatment system would have to be designed to accommodate the total flow resulting from 16.3 inches of runoff while the average annual operation cost would be based on an annual runoff of 7.3 inches. Since the operation and maintenance costs presented in Tables IV-52a thru IV-52e were not clearly defined, the adjustment was made by assuming all operation and maintenance costs as fixed costs with the exception of those identified as energy related. Those energy related operation and maintenance costs (i.e. irrigation rigs, drainage, and reuse pumping) were reduced by the ratio of the average annual flow to the design flow.

A listing of the adjusted cost data used to develop each alternative can be found in Part D of the addendum of this report. References to specific pages in the addendum can be found in the description of the alternatives.

Stormwater Collection and Storage

Municipal stormwater runoff is contributing a more significant portion of the total pollutant load entering the nation's surface water courses. As municipal sewage facilities become more complete and there are tighter controls on the quality of industrial effluent, its contribution will be even greater. The ultimate goal for pollution control would be, therefore, to collect all stormwater runoff from urban and suburban areas and stormwater overflows from all areas served by a combined sewer system. In reality a significant portion of this water will be collected and treated and the amount will be determined by such factors as environmental impact, cost effectiveness, and technical feasibility.

Separation of Stormwater and Municipal - Industrial Wastewater Systems

One of the major decisions which was made in the development of wastewater alternatives in Southeastern Michigan was that the water resulting from stormwater runoff would be collected and treated separately from the municipal-industrial flow. There are several technical reasons why this approach was taken.

Stormwater collection systems, based on intermittent flow of varying velocities, are not desirable for transporting smaller more uniform flows such as are found in sanitary sewers. The proposed stormwater collection systems use large diameter deep tunnel interceptors with minimum gradients. This provides for storage capacities in the tunnels but restricts low flows. Suspended material, especially that which is prominent in municipal sewage can settle out and cause health and odor problems.

Much of the regional area is already sewered. Combined sewers are present only in older sections of the urbanized area. Separate storm and sanitary sewers are currently being constructed in all newly developed areas and this practive is to continue in the future. By supplementing the combined sewers with facilities to collect overflows caused by stormwater runoff the more uniform sanitary flow from expanding regional systems can still be tranported to the old existing system. A uniform flow can also be transported by smaller conduits and does not alwasy have to rely on gravity. Pumps and force mains can be used which means pipes don't have to be installed as far below the surface, and costs associated with transmission would be reduced.

Storage is a key element in stormwater control. The lower concentrations of organic material and other critical constituents allow stormwater to be stored without costly supplemental treatment. The introduction of large amounts of municpal-industrial wastewater would necessitate this supplemental treatment. In addition, specific industrial waste constituents, such as cyanide, phenols, and chromium to name a few, require specific treatment processes which might not be required to purify stormwater. Future investigations such as pilot plant studies, may show that stormwater can be treated by less complex more economical treatment. In this case, separate collection and storage systems for stormwater would be required.

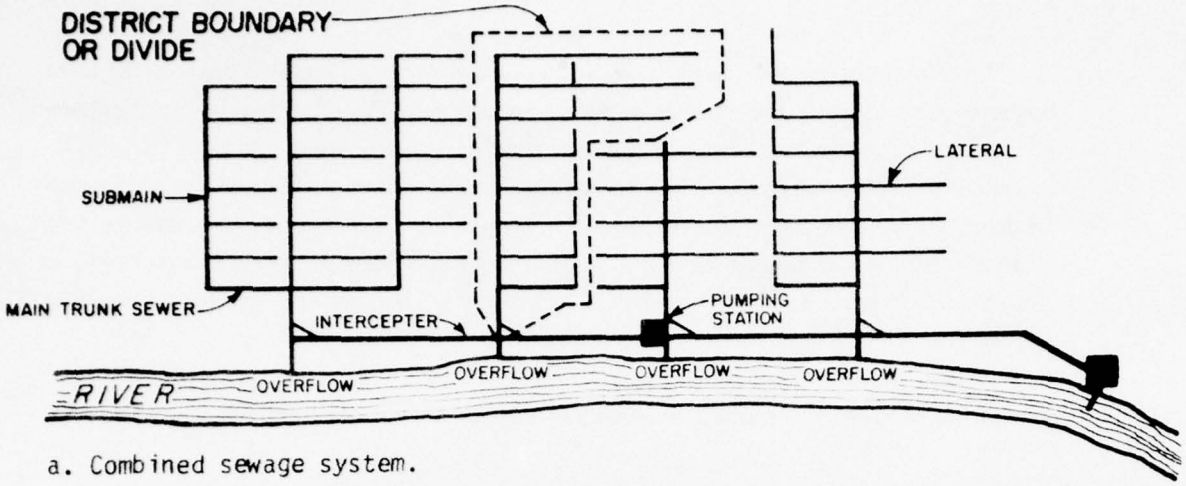

a. Combined sewage system.

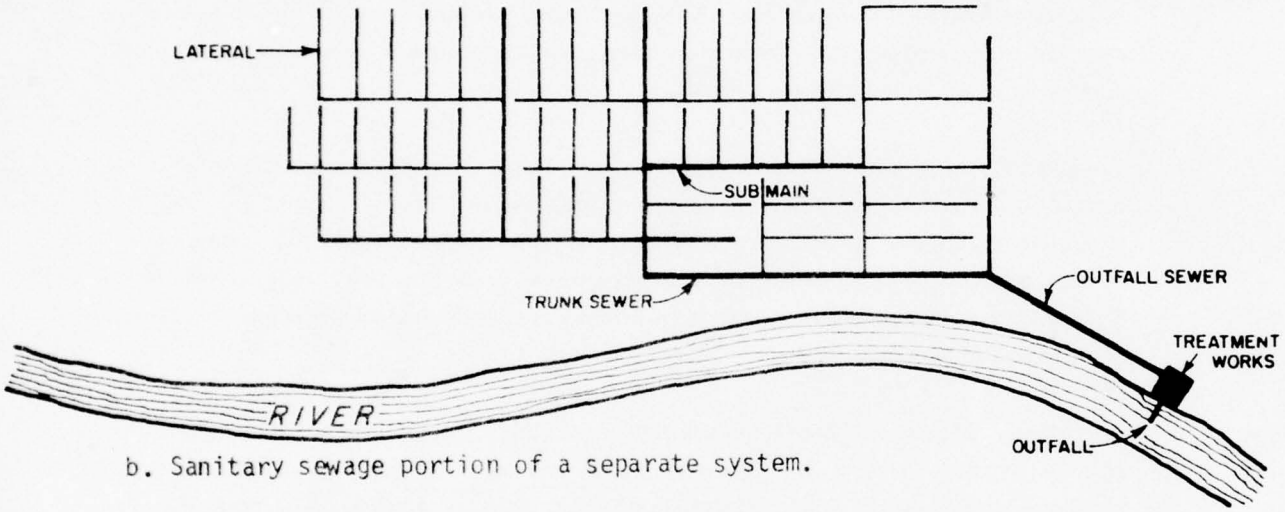

b. Sanitary sewage portion of a separate system.

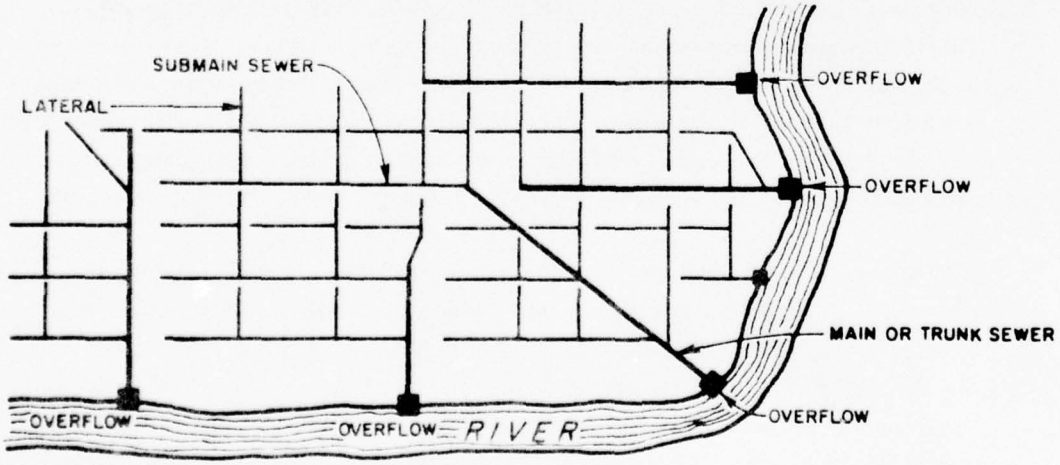

c. Storm sewage portion of separate system.

Fig. IV-54

Typical sewage systems found in Southeastern Michigan.

In the initial designs, separate treatment facilities for stormwater were recommended independently by consultants who were asked to design facilities for both types of wastewater being considered. Their major concern was the intermittent nature of stormwater flows. In Advanced Wastewater Treatment, where biological processes are used, these intermittent flows hinder efficient operation. For this reason it was proposed that independent physical-chemical treatment or land treatment of stormwater be developed.

In cases where land treatment is part of a combined system alternative and treatment of stormwater and M & I wastewater would be the same, the collection and storage of stormwater would still remain separate. The transportation of both types of wastewater to the land treatment site could take place in the same transmission tunnels since the flow out to the lagoons would be a uniform municipal-industrial flow with a stabilized stormwater flow when present. The tunnel then could be built to accommodate this stabilized flow much the same as a sanitary sewer is designed.

Initial Investigations

Five alternate schemes of collection and storage facilities for separate and combined sewer overflows were evaluated for the study area of approximately 1,930 square miles in Southeastern Michigan. These alternative schemes were evaluted for 2, 5, 10 and 25 year storm frequencies.

Alternatives 1 and 2 were based on the use of deep tunnel interceptors and mined storage reservoirs. Alternative 1 uses low velocity tunnels with mined storage reservoirs located beneath four proposed treatment plants: Algonac, Mt. Clemens, Detroit, and the mouth of the Huron River.

Alternative 2 considers medium velocity tunnels with mined storage at five locations. Four of the mined storage reservoirs were located at the treatment plants and a fifth was located at the confluence of the Middle Rouge and Upper Rouge Rivers.

Alternatives 3 and 4 consider the use of smaller size surge reservoirs, both surface and underground, for retention of stormwater. These retention basins would be located throughout the area ranging in size from 7 to 117 million gallons depending on the rainfall frequency, the size of the service area, and the runoff coefficients used. From these retention basins an interceptor system would transport the stormwater to regional treatment plants located at Algonac, Mt. Clemens, Detroit, and at the mouth of the Huron River. Alternative 4 would use the same retention scheme as alternative 3 but instead of transporting the stormwater to a regional plant, treatment facilities would be located at each reservoir site.

Alternative 5 considers an integrated stormwater collection and storage system based on Alternatives 1 and 3, utilizing the best systems from these alternatives for the different areas. The decision to utilize the concepts of Alternatives 1 and 3 as opposed to those for Alternatives 2 and 4 is based on the following:

a. Comparisons of total costs for Alternatives 1 and 2 suggest that 1 has a slightly lower total project cost.

b. The capacity of mined storage reservoirs for Alternate 1 is less than that required for Alternate 2 because of the larger tunnel storage capacities available in Alternate 1. This will require purchasing of less land because tunnels will be located in existing public rights-of-way while mined storage reservoirs will require the purchase of additional land.

c. Interceptor costs necessary for transporting stormwater to regional treatment facilities are assumed to be less than the additional cost of constructing treatment facilities at each surface and underground storage site. When the relative costs of regional and local stormwater treatment facilities are known, the validity of this assumption will be verified.

From these investigations various components, which were favorably suited to specific areas, were chosen for more detailed investigation. Criteria which determined the favorability of a component were economic cost, environmental impact, social well-being, technical feasibility, and current plans for the study area.

The service area for the stormwater system was broken up into 7 parts and was identified by major interceptor arms. Using the above criteria, the best alternatives, for each of the 7 sub-areas, were selected and were used for developing alternative urban stormwater control plans for the entire area. The sub-areas are shown in Figure IV-55 and are discussed below.

a. *The Upper Huron Service Area* - Much of the Upper Huron area is currently undeveloped and offers the opportunity of planning multiple surge reservoirs for stormwater retention. This would eliminate the need for constructing any large, peak flow tunnels which are economically unfeasible. The storage would be provided in open surface reservoirs or inclosed underground reservoirs. Treatment would be accomplished after transmission to a regional stormwater treatment plant near Ypsilanti or the mouth of the Huron River, or a land treatment area in Monroe and Lenawee Counties.

b. *The Lower Huron Service Area* - Parts of the area currently undeveloped and can be served by surge reservoirs. the developed area would be served by deep tunnels with storage being provided at a large surface storage lagoon in Monroe County or at a large mined storage reservoir beneath Lake St. Clair. The wastewater would be treated at facilities located near the storage areas or at land treatment sites in Monroe, Lenawee, or St. Clair Counties.

c. *The Plymouth Arm Service Area* - The Plymouth Service area can be developed using surge reservoirs and interceptors leading to a treatment facility or a deep tunnel conveyance system at Plymouth. Technically and economically extending the tunnel beyond Plymouth has no advantages.

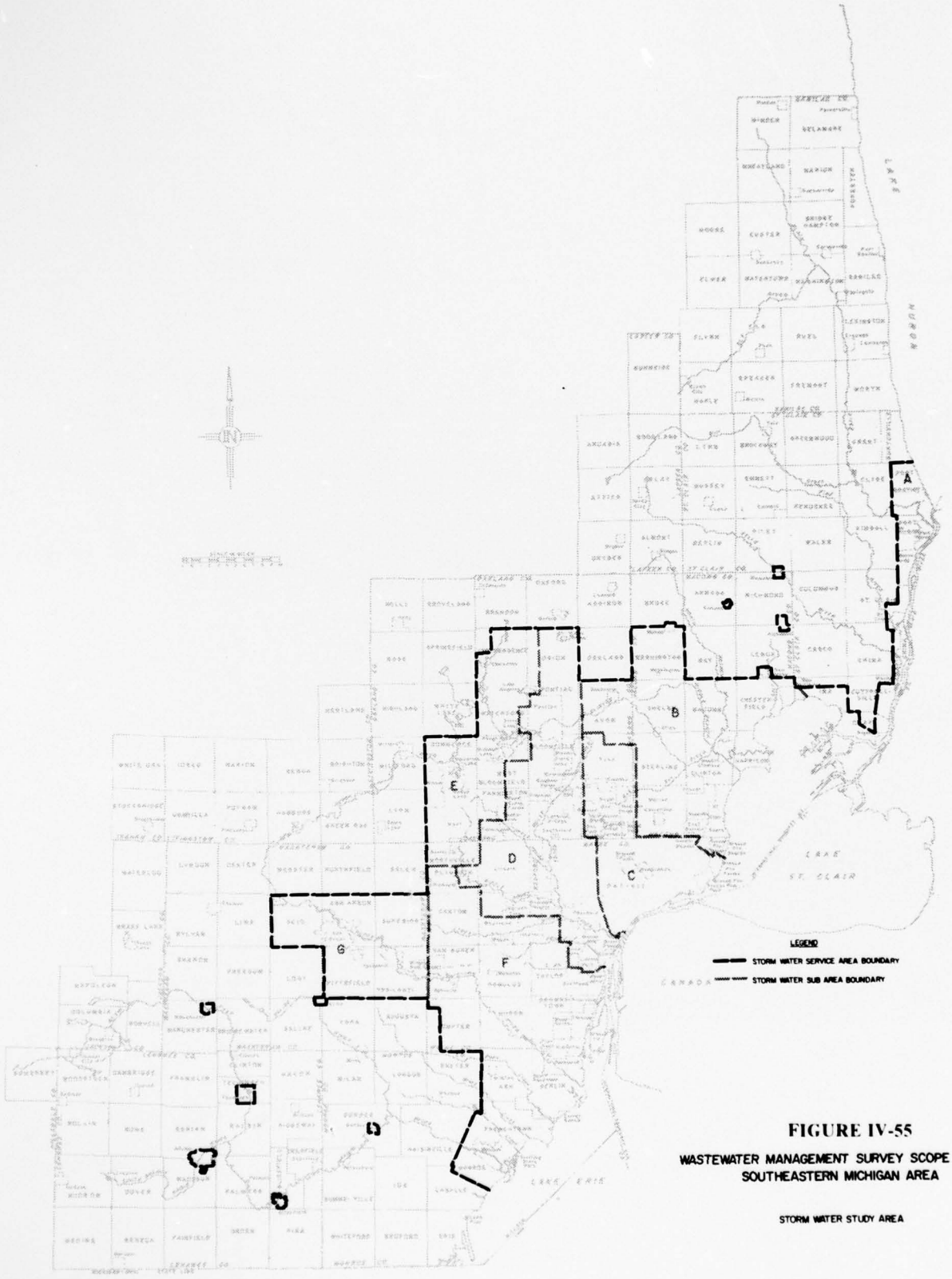

FIGURE IV-55

WASTEWATER MANAGEMENT SURVEY SCOPE STUDY
SOUTHEASTERN MICHIGAN AREA

STORM WATER STUDY AREA

d. *Pontiac Arm Service Area* - The Pontiac Arm collects water in the urbanized area from the Inner City of Detroit to beyond the City of Pontiac. The availability of land in this area is limited and therefore the stormwater will be transported by large deep tunnel interceptors to large storage areas. The alternative storage sites would be mined storage under Lake St. Clair, surface storage at Monroe County, or surface storage at Mocomb County. Stormwater treatment facilities would be located near the storage facilities.

e. *Oakland-Macomb Arm Service Area* - The Oakland-Macomb Arm collects water in the urbanized area of Detroit along the Detroit River and continuing up to the Twelve Towns area. The limited amount of land available for surge reservoirs makes deep tunnel interceptors the appropriate choice for collection of stormwater. The water can be stored at a mined storage site under Lake St. Clair or at a large surface storage area in Macomb County. Stormwater treatment facilities would be located near the storage sites in the form of plants or land treatment areas.

f. *Clinton Service Area* - The Clinton area consists of the proposed developed portion of the Clinton River Basin. Portions of this area are currently developed and other portions are not. The undeveloped portions can be served by surge reserviors and interceptors. The interceptors would empty into the deep tunnel interceptors which would service the urbanized portion. Storage would be provided at a large surface storage area in the northern part of Macomb County or at a mined storage area located beneath Lake St. Clair near the mouth of the Clinton River. Treatment would be provided at stormwater treatment facilities located near the storage area or be transported to land treatment sites in St. Clair County.

g. *St. Clair Service Area* - St. Clair County from Port Huron to Algonac is developed along the river in a strip not usually more than a mile inland. This area can be developed using surge reserviors and an interceptor flowing toward the stormwater treatment facilities. The St. Clair Service Area can be addressed independently from the other service areas and is more suited to variations than others for that reason. Stormwater treatment could be accomplished at Port Huron, and/or East China Township by stormwater treatment plants or it could be taken to land treatment sites in St. Clair County.

Selection of Final Design Criteria

Stormwater is a term which describes water in regard to its properties, distribution, and behavior in accordance with hydrologic events. These events can be recorded and analysed for use in engineering decisions. Some of the parameters used include rainfall, runoff, frequency of storms and climatic conditions. These parameters along with similar interfaces form the field of statistical hydrology. The basis of the storage system design methodology for the Survey Scope of the Wastewater Management Study in Southeastern Michigan involved the statistical analysis of tremendous amounts of raw data from a drainage basin within the study area. From this raw data, useful parameters were developed and important decisions were made. Hydrologic considerations also form an important basis for the design of the collection system. Peak flow rates can be estimated only after an extensive analysis of hydrologic data in the area.

Climate in Southeastern Michigan is moderated by the stabilizing influence of the Great Lakes prevailing westerly winds passing over Lake Michigan which subdue the extremes in temperature and result in a mean annual temperature of about 49.1° F. The mean monthly temperatures range from a high of 72.9 degrees in July to a low of 25.3 degrees in January. Temperature extremes have varied from 105° F in July 1934 to -24° F in December 1872.

In general, the annual precipitation does not vary greatly over Southeastern Michigan. The average annual precipitation over the area varies from 28.17 inches at Mt. Clemens to about 33.69 inches at Adrian. Long term records for this area show that precipitation is evenly distributed throughout the year, varying from about 2 inches in January to a little over 3 inches in June.

The basic source for long term precipitation data is the U. S. Department of Commerce Weather Bureau Tecnical Paper Series, in particular, No.'s 2, 25, 29, 40 and 49. These data have been developed from the best long term precipitation records available for a given locality.

Southeastern Michigan is subject to two type of storms. The first type is the large area storms of long duration and moderate intensities and the other type is the short term, thunderstorm type rainfall of short duration and high intensity. The longer duration storms occur any time throughout the year, but intense local storms of the thunderstorm type usually occur in the late spring and thoughout the summer.

High and low pressure systems tend to move across Southeastern Michigan at intervals from about 3 to 5 days. These disturbances originate in the North Pacific, Western Canada, or in the Rocky Mountain regiin and travel at the rate of about 500 miles a day. Low pressure areas do not remain stationary over the state for long periods of time, and precipitation records do not indicate that such conditions have occurred within the record, since major storms have been limited to a duration of 3 days or less. The major extensive storms of record, that have produced periods of high runoff over large areas, have been cyclonic disturbances similar to those mentioned above.

Storage System Methodology - A frequency pattern using the monthly stream flow for the Rouge River at Detroit was established by Logarithm Pearson Type III Method. The Rouge River gage at Detroit was selected for the following reasons:

a. Forty years of daily runoff records were available. More than any other gage in the study area.

b. The drainage area contributing to the gage represented a composite of typical urban developments ranging from industrial and commercial complexes to neighborhoods of single family units.

c. The drainage area represented a stabilized urban development with growing centers of urbanization in the outer perimeters of the metropolitan area.

Frequency curves were developed for various months and combination of months for the River Rouge gages at Detroit and other locations and at gages on the Clinton River. The Clinton River is another significant basin in the urbanized portion of Southeastern Michigan. These curves indicated a close correlation between the runoff characteristics in the various portions of these urban drainage areas. For this reason the criteria developed from the Detroit gauge would be design criteria for the entire study area.

After analysis of the monthly runoff frequency curves, it became apparent that a method for relating storage to pumpout rates would be necessary. Preliminary investigation of this procedure indicated the need for more specific data than the monthly records that were used for the frequency curves so daily runoff rates were obtained. A computer simulation program was used to find a storage volume and pumpout rate that would meet the following requirements:

a. The max pumpout rate would be low enough to enable the efficient on-off operation of an independing physical-chemical stormwater treatment plant.

b. The storage would be large enough to limit pollutant overflow to a degree determined to be beneficial by ecological evaluators.

The computer simulation was based on the following equations:

1. $V_1 = V_0 + R_1 - T_1$

where: V_1 = Volume in storage at end of a time period

V_0 = Volume carried over from previous time period

R_1 = Total Volume of Runoff in the time period

T_1 = Volume treated in the time period

and the time period can be a day, month or year.

2. If $V_0 + R_1 + T_{Max}$ then $T_1 = T_{Max}$

where T_{Max} = Maximum Amount Treated in the time period

3. If $V_0 + R_1 \quad T_{Max}$ then $T_1 = V_0 + R_1$

4. If $V_1 \quad V_{Max}$

where V_{Max} = the maximum storage available or designed

then $S = V_1 - V_{Max}$

where S = the Spill or Overflow during the time period

A computer printout is shown in Table IV-53 - The drainage area is given as 194.00 sq. miles. The plant treatment at 0.072 inches per day is the pump out rate being tested. The storage capacity of 1.5 inches is a volume being tested and corresponds to **x** as described above. The storage index tells the computer we would like the data, for each time period in which the storage capacity exceeds this number, printed out for examination. We are assuming the storage facility is empty at the start of the test.

The columns of data supplied in the printout refer generally to the members addressed in the formulae above. The first column gives the time period involved. The second column gives the discharge at the gauge in cubic feet per second. The third column gives the total runoff for the time period or **R** . The fourth column gives the volume treated in the time period or **T,** as described above. The fifth column tells the number of days in the time period. A blank space indicates one day. The sixth column gives the volume in storage at the end of the time period or **V** as described above. The seventh column gives the overflow or amount spilled during the time period or **S** as described above.

This simulation program was run using various pumpout rates and data was generated which resulted in the development of a family of curves. These curves, see figure IV-56, show the frequency distribution of required storage at the various pumpout rates. With this set of curves one can determine the amount of storage required to prevent a spill for the design frequency and pumpout rate of any given system.

The storage and pumpout rate requirements selected for design criteria in the Survey Scope Study were selected on the basis of existing facilities, ecological evaluations, and the ability of treatment plants to operate efficiently at specified pumpout rates. The storage requirement was chosen to be 2.1 inches of runoff. This value corresponds to about 0.1 inch more than the 10-year storage requirement at a pumpout rate of .003 inches per hour. The 10-year frequency corresponds to the design frequency of the majority of the collection system in the area. A pumpout rate of .003 inches per hour was selected as the maximum effective treatment rate for IPC treatment plants as determined by the design engineers. The slightly higher storage value was chosen to allow for some solids buildup in the storage basins and to provide a slight safety factor in design. The selected criteria was analysed by ecological evaluators and found to be near the threshold of significance on water quality degradation.

It was recognized that small drainage areas are subject to more localized storm conditions and consequently require more storage than larger areas to achieve the same degree of control. Analysis of the information in the Department of the Army Civil Engineer Bulletin No. 52-8 reveals that for a particular storm, smaller drainage areas *30-50 square miles* may experience 2030 percent more rainfall than large drainage areas *800-1000 square miles.*

The proposed stormwater storage system is divided into two categories based on the size of the service area. The first category serves very large urbanized areas and is designed to store 2.1 inches of runoff from the tributary area. The second category of storage system serves small areas about the size of a township. These are designed to store an additional .6 inch (the 20-30 percent) or 2.7 inches of runoff from the tributary area.

TABLE IV-53

COMPUTER TABULATION OF
STORMWATER SIMULATION DATA

DRAINAGE AREA 194.00 SQ MI
PLANT TREATMENT 0.07200 IN PER DAY
STORAGE CAPACITY 1.50 IN
STORAGE INDEX 0.80 IN
IN STORAGE 0.00000

		DISCHARGE CFS	DISCHARGE IN OF RO	AMOUNT TREAT/DAY	NO DAY	STORAGE INCH	OVER FLOW INCH
OCT	1944	402.0	0.07706	0.07706	31	0.00000	0.00000
NOV	1944	558.0	0.10697	0.10697	30	0.00000	0.00000
DEC	1944	540.0	0.10352	0.10352	31	0.00000	0.00000
JAN	1945	532.0	0.10198	0.10198	31	0.00000	0.00000
FEB	1945	648.0	0.12422	0.12422	28	0.00000	0.00000
MAR	1945	3093.0	0.59293	0.59293	31	0.00000	0.00000
APR	1945	4571.0	0.87626	0.87626	30	0.00000	0.00000
18 MAY	1945	3240.0	0.62111	0.07200		1.22068	0.00000
19 MAY	1945	1530.0	0.29330	0.07200		1.44199	0.00000
20 MAY	1945	530.0	0.10160	0.07200		1.47159	0.00000
21 MAY	1945	365.0	0.06997	0.07200		1.46956	0.00000
22 MAY	1945	307.0	0.05885	0.07200		1.45641	0.00000
23 MAY	1945	262.0	0.05023	0.07200		1.43464	0.00000
24 MAY	1945	198.0	0.03796	0.07200		1.40059	0.00000
25 MAY	1945	181.0	0.03470	0.07200		1.36329	0.00000
26 MAY	1945	159.0	0.03048	0.07200		1.32177	0.00000
27 MAY	1945	140.0	0.02684	0.07200		1.27661	0.00000
28 MAY	1945	255.0	0.04888	0.07200		1.25349	0.00000
29 MAY	1945	248.0	0.04754	0.07200		1.22903	0.00000
30 MAY	1945	176.0	0.03374	0.07200		1.19077	0.00000
31 MAY	1945	159.0	0.03048	0.07200		1.14925	0.00000
MAY	1945	14747.0	2.82701	1.67776	31	1.14925	0.00000
1 JUN	1945	170.0	0.03259	0.07200		1.10984	0.00000
2 JUN	1945	530.0	0.10160	0.07200		1.13944	0.00000
3 JUN	1945	680.0	0.13036	0.07200		1.19780	0.00000
4 JUN	1945	500.0	0.09585	0.07200		1.22165	0.00000
5 JUN	1945	410.0	0.07860	0.07200		1.22825	0.00000
6 JUN	1945	288.0	0.05521	0.07200		1.21146	0.00000
7 JUN	1945	288.0	0.05521	0.07200		1.19467	0.00000
8 JUN	1945	255.0	0.04888	0.07200		1.17155	0.00000
9 JUN	1945	170.0	0.03259	0.07200		1.13214	0.00000
10 JUN	1945	61.0	0.01169	0.07200		1.07183	0.00000
11 JUN	1945	122.0	0.02339	0.07200		1.02322	0.00000
12 JUN	1945	86.0	0.01649	0.07200		0.96771	0.00000
13 JUN	1945	79.0	0.01514	0.07200		0.91085	0.00000
14 JUN	1945	73.0	0.01399	0.07200		0.85265	0.00000
15 JUN	1945	110.0	0.02109	0.07200		0.80193	0.00000
JUN	1945	5290.0	1.01410	2.16000	30	0.00335	0.00000
JUL	1945	1507.0	0.28889	0.29224	31	0.00000	0.00000
AUG	1945	591.0	0.11330	0.11330	31	0.00000	0.00000
SEP	1945	762.0	0.14608	0.14608	30	0.00000	0.00000
	1944	33241.0	6.37232	6.37232	365	0.00000	0.00000

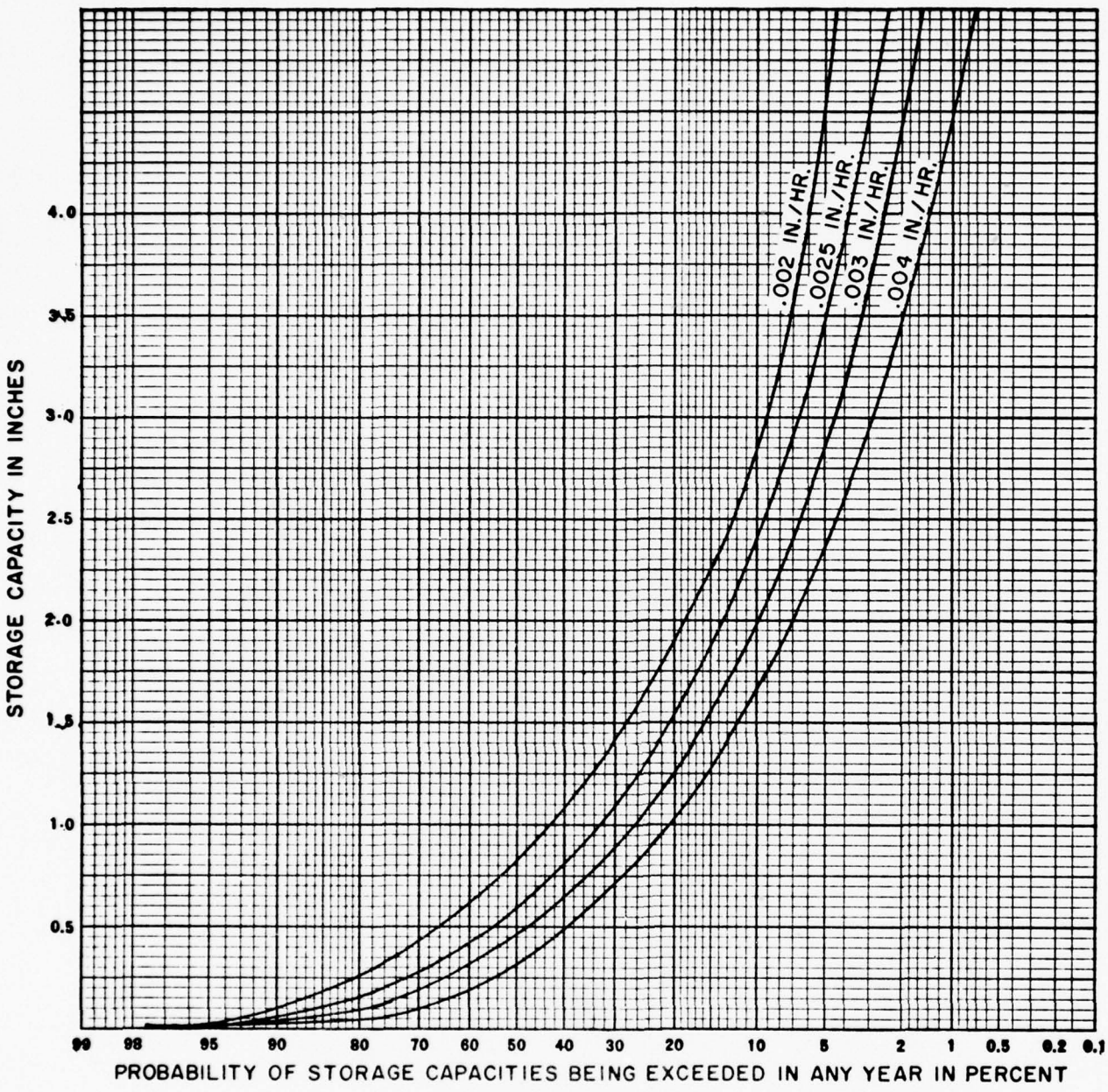

FREQUENCY DISTRIBUTION OF HISTORICAL DATA TESTED AGAINST VARIOUS PUMPOUT RATES AND STORAGE CAPACITIES TO ELIMINATE OVERFLOWS

FIGURE IV-56

Collection System Design Methodology - Methods of estimating peak flow rates vary greatly depending on the size of the drainage area. The American Society of Civil Engineers Committee on Hydrology has given the following breakdown on the methods used for peak flow estimations:

Drainage Areas (In Square Miles)	Present Practice
1	Overland flow hydrograph; rational method
1-100	Rational method; unit hydrograph; flood frequencies; flood peaks versus drainage area.
100-2000	Unit hydrograph; flood frequencies; flood peaks versus drainage area.

Conventially, the rational method has been used for design of storm water systems for drainage areas of less than 5 square miles. Development of data for application of hydrograph methods usually is warranted on larger areas.

For the large areas, storage and subsurface drainage flow cause an attenuation of the runoff hydrograph so that rates of flow tend to be over-estimated by the rational formula unless these effects are taken into account. Since the drainage areas being considered for this study are much larger than the upper limit for the application of the rational method, limitations of using this method become self-evident. The method of estimating peak flows used here was developed by Dr. E. F. Brater as discussed in the publication, "Prediction of the Magnitudes and Frequencies of Floods in Michigan". This method is known as the infiltration capacity-unit hydrograph method.

The basis for the publication was the analysis of rainfall and snow melt and the corresponding flood runoff which occurred in drainage basins varying in size from .02 to 734 square miles and in population density from 100 to 13,000 persons per square mile.

All known methods of predicting floods from precipitation were investigated and the infiltration capacity-unit hydrograph procedure was selected as the most suitable method for practical application because it combined a high degree of accuracy with simplicity of application. This method requires that information on infiltration capacity and hydrograph shape be obtained from the analysis of rainfall and surface runoff events. The infiltration capacities apply specifically to the areas where they were obtained. The infiltration values shown in the report and used in deriving the design curves were obtained from 16 drainage basins located in Southeastern Michigan. They may be used elsewhere if the soil and vegetative cover are similar. The shape of the unit hydrograph depends on the physical characteristics of the drainage basin and the degree of urbanization. The research showed that the two most important parameters are the area of the drainage basin and the population density.

Curves were derived relating peak unit hydrograph discharge to area and population density.

A frequency curve of rainfall plus snow melt was prepared from the analysis of 535 station years of records for Southeastern Michigan. With this information a set of design curves for flood magnitudes was derived for Southeastern Michigan for frequencies of 10, 20 30, 50 and 100 years and for population densities varying from 100 to 10,000 persons per square mile. It is believed that these provide the most accurate procedure for designing storm sewers, culverts and bridge openings in this area and that they could also be applied elsewhre in Michigan with great confidence except where the soil is very sandy. These design curves were carefully checked and found to give good results in agreement with measured flood records. In order to use the curves it is only necessary to determine the area of the drainage basin above the site of the proposed structure and estimate the probable population density during the life of the structure. Figure IV-57 shows an example of such a curve for a 10 year storm frequency.

The size of the drainage area for many basins can be determined from U.S.G.S. topographic maps. However, for urban areas it is usually also necessary to obtain maps showing the storm sewer network because the natural drainage areas are sometimes modified artificially. It is also worthwhile to determine if any major changes of this type are expected in the future. Population densities both present and projected can often be obtained from city or county planning commissions or from public utilities.

Example: Suppose the drainage basin area is 10 square miles and the expected population density is 6,000 persons per square mile. Then the 10-year flood peak discharge is read from Figure IV-57 as 2,500 cfs.

Presentation of Alternative Schemes

Six alternate schemes of collection and storage systems for combined and separate storm sewer overflows have been evaluated for the study area. All six schemes provide an integrated system utilizing interceptors, force mains, deep tunnels, surface and mined storage reservoirs to collect and contain the combined sewer overflows and separate storm sewer overflows from the 1990 projected sewered areas of Southeastern Michigan. Urbanized areas with high population density and low availability of vacant land are being served with deep tunnels and large surface or mined storage reservoirs, while the more sparsely populated areas are being served with interceptors and local surface reservoirs.

Cost estimates for Scheme One through Six have been developed using estimated unit prices of construction that are based whenever possible, on actual construction costs for similar type projects.The project life used for computations is 50 years and costs have been computed on interest rates of 5-½, 7, and 10 percent.

The six schemes are discussed and cost estimates are presented in the following sections.

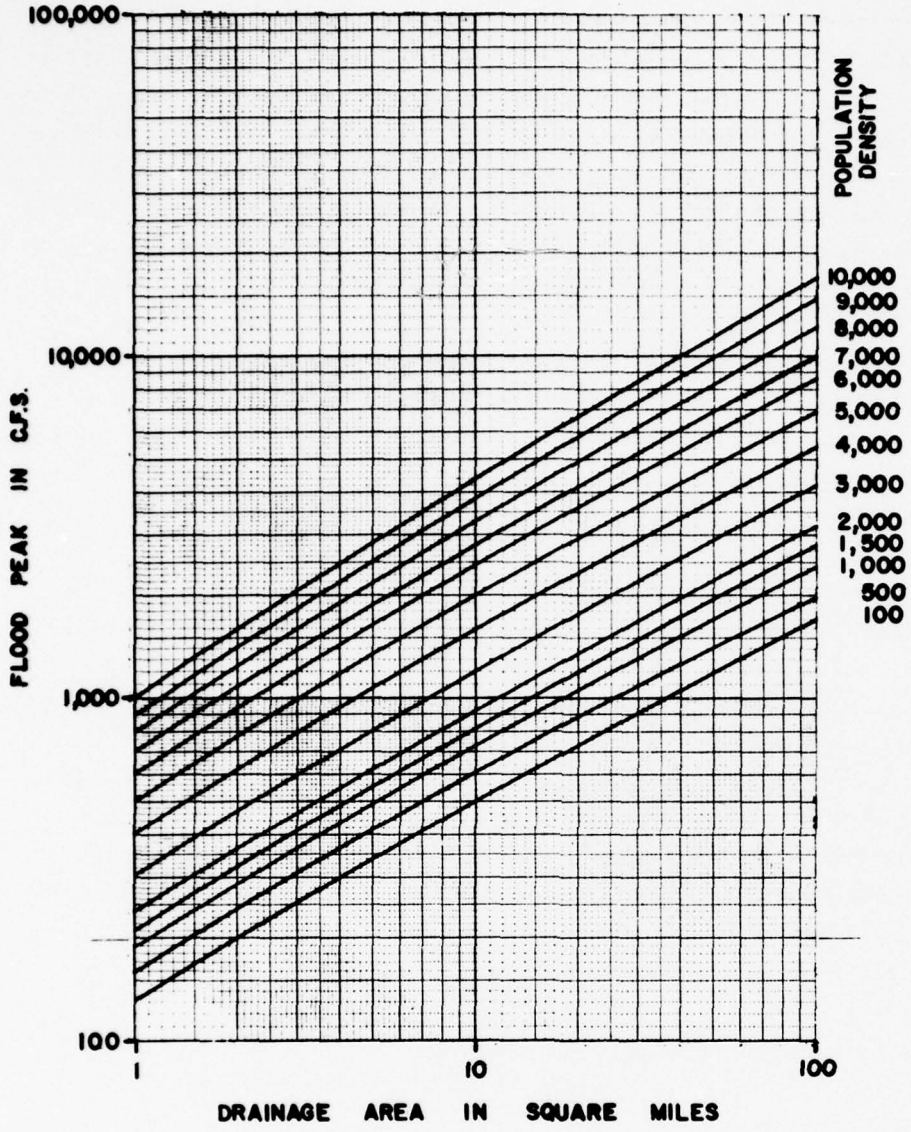

WASTEWATER MANAGEMENT SURVEY SCOPE STUDY
SOUTHEASTERN MICHIGAN AREA

10-YEAR FLOOD PEAK VS.
DRAINAGE AREA & POPULATION DENSITY

U. S. ARMY ENGINEER DISTRICT, DETROIT

FIGURE IV-57

Schemes One and Two - Under these schemes, two types of collection and storage systems are proposed. In highly urbanized areas, large deep tunnel interceptors capable of handling peak storm flows transport runoff to two large regional surface reservoirs and subsequently to treatment facilities located along the North Branch of the Clinton River in Macomb county and near the mouth of the Huron River in Monroe County. The remaining areas are served by a multiple storage-interceptor system in which smaller intermittent storage facilities are used to absorb peak storm flows. Effluent from the storage facilities is discharged into the regional interceptors and treated at the local or regional treatment facilities.

The communities of Armada, Richmond, Memphis, Romeo, Manchester, Adrian, Tecumseh, Blissfield and Dundee are provided with individual storage reservoirs, and are not included as part of the total collection system because of the high cost of the required connecting interceptors. These communities are more economically served by some type of local treatment.

The proposed storm water collection and storage system for Schemes One and Two is shown in Figure IV-58. Both schemes provide pick-up points for treatment at Algonac and each of the two regional surface reservoirs. In addition, Scheme Two also provides two additional pick-up points for treatment of storm water collected from sub-drainage areas E and G. These pick-up points are located near Plymouth and Ypsilanti, as shown in Figure IV-58. Treatment at these two points reduces the sizes and lengths of the interceptors required for transporting storm water to the tunnels. This does not result in any change of tunnel sizes for Scheme Two from Scheme One. Another significant change between these schemes occurs in the total quantity of annual power consumption for pumping storm water from the tunnels to the surface reservoirs. Since Scheme Two has less total quantity of water to pump than Scheme One, annual power cost for Scheme Two is less.

The following summarizes several major components of the collection and storage system for Scheme One and Two. These are: tunnels, vertical drops, access shafts, interceptors, force mains, and surface reservoirs.

A total of 134 miles of tunnels are required in Schemes One and Two and they vary in size from 18 to 48 feet in diameter. Apprximately 34.4 miles of tunnels require concrete ling because of the structurally weak geologic formation and 99.6 miles of tunnel require lining in some areas. Design velocities for the tunnels vary from 6 feet to 16 feet per second. The tunnels provide approximately twenty percent of the total storage required for the areas being served by the tunnels. The remaining storage is provided in two regional surface reservoirs located in Macomb and Monroe Counties.

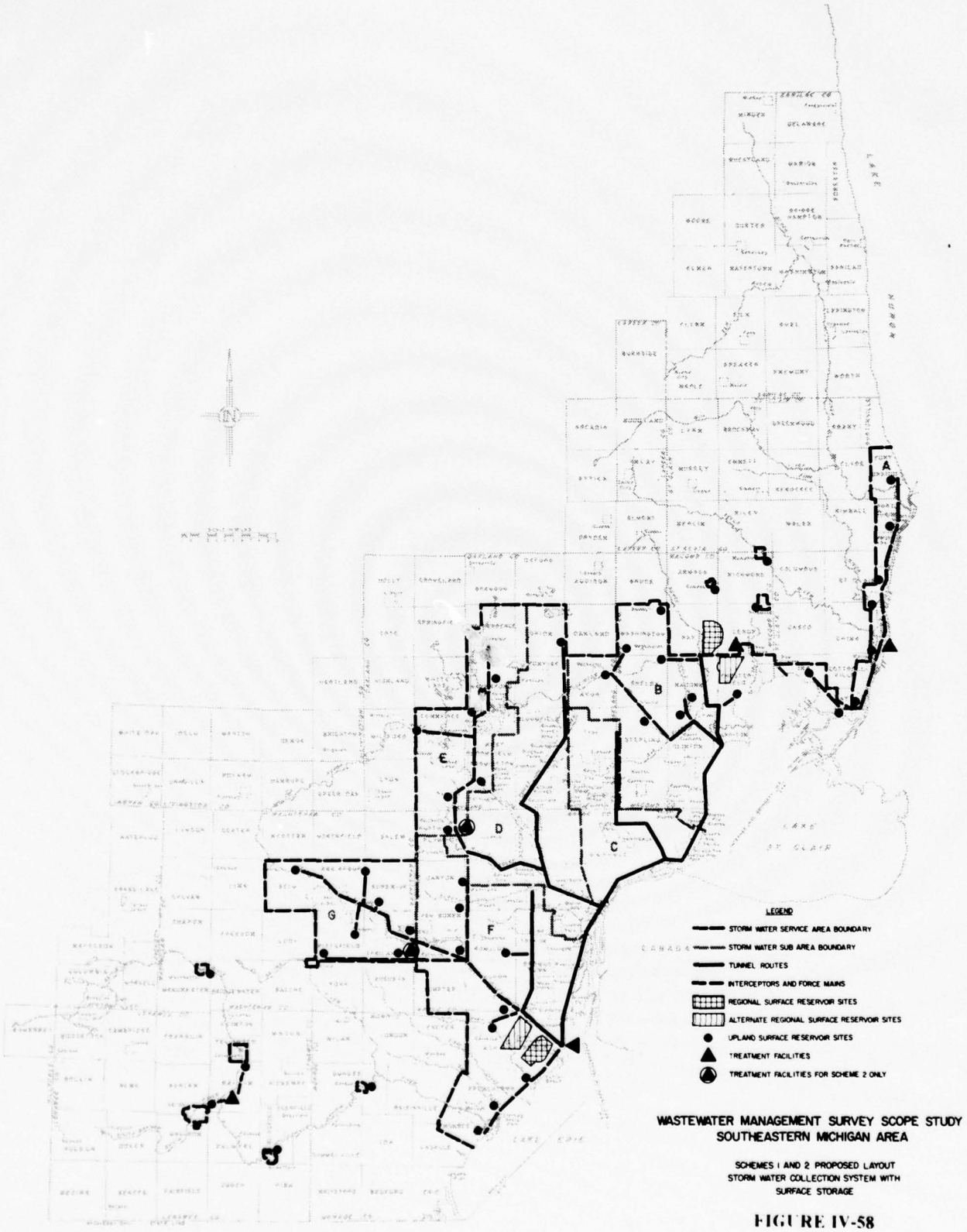

WASTEWATER MANAGEMENT SURVEY SCOPE STUDY
SOUTHEASTERN MICHIGAN AREA

SCHEMES I AND 2 PROPOSED LAYOUT
STORM WATER COLLECTION SYSTEM WITH
SURFACE STORAGE

FIGURE IV-58

Schemes One and Two each require 51 surface reservoirs of which 49 are small upland surface reservoirs serving the sparsely populated outlying areas and two are large regional surface reservoirs serving the urbanized areas. Upland reservoirs vary in capacity from 300 to 2400 million gallons. Table IV-54 summarizes the storage requirements for the various sub-areas along with the amount of storage being provided in the reservoirs and the tunnels. Each of the two regional surface reservoirs has a storage capacity of 22,000 million gallons. Two alternate sites for these reservoirs have been shown in Figure IV-58. Field investigations will be necessary in order to determine final sites.

Vertical drops are used wherever necessary to direct the stormwater flows from the surface collection system into the tunnels. These vertical drops have not been shown on the map of the proposed facilities for Schemes One and Two. An estimate has been made for the total number of vertical drops required.

Access shafts are provided every five miles of the tunnel length. Twenty foot diameter access shafts are provided for transporting men and equipment during construction. Larger thirty-five foot diameter shafts are used for pumping stations at the two regional surface reservoirs.

Interceptors are required to transport stored storm water from upland surface reservoirs to pick-up points for treatment or to the tunnel interceptors.

Force mains are of both influent and effluent variety. Influent force mains are provided to carry flows between pumping stations and upland surface reservoirs in cases where the pumping stations are located remote from the storage sites. Effluent force mains are required to transport collected storm water from upland surface reservoirs in areas where there is not enough available ground slope to use gravity interceptors.

Construction and operation and maintenance cost estimates for Schemes One and Two are presented in Tables IV-55 & IV-56. Scheme One has slightly higher total capital cost ($2,581.71 vs $2,561.62 million dollars) because of the interceptors and force mains used for bringing flows from sub-areas E and G to the tunnels. Annual operation and maintenance costs for Scheme One are also higher than for Scheme Two (7.14 vs 6.42 million dollars) because the total quantity of pumping required for Scheme One is higher than that for Scheme Two.

The total annual cost for Scheme One is 159.619 million dollars and for Scheme Two is 157.712 million dollars based on ammortization of capital cost at 5-½ percent for a 50-year project life. It should be noted that cost estimates for Schemes One and Two do not include any capital cost figures for supplying power to the various pumping facilities.

TABLE IV-54
SUMMARY OF STORAGE REQUIREMENTS

Sub Area	Contributing Drainage Area (Sq. Miles)	Total Storage Required (MG)	Storage Provided in Upland Reservoirs+ (MG)	Storage Provided in Regional Surface or Mined Storage Reservoirs and Tunnels ++ (MG)
A	97.70	4,620	4,620	
B	334.50	14,090	8,690	5,400
C	177.70	6,400		6,400
D	322.80	11,830	970	10,860
E	194.30	9,130	9,130	
F	438.80	18,830	13,030	5,800
G	161.10	7,570	7,570	
Rural Communities	14.70	695	695	
Total	1741.60	73,165	44,705	28,460

+ Storage based on a runoff of 2.7 inches over the contributing area

++ Storage based on a runoff of 2.1 inches over the contributing area. Tunnels provide approximately 6,400 MG storage in Schemes One, Two and Five and 5,400 MG in Schemes Three and Four.

TABLE IV-55

COST ESTIMATE - SCHEME 1

STORMWATER STORAGE & COLLECTION SYSTEM

Components	Construction Cost Million Dollars	Amortized Construction Cost Thousand Dollars	Annual Operation and Maintenance Thousand Dollars	Total Annual Treatment Cost Thousand Dollars
Tunnels	1314.60	77,640	147	77,787
Vertical Drops	8.09	478	-	478
Access Shafts	39.05	2,304	-	2,304
Regional Surface Reservoirs	206.01	12,170	300	12,470
Mined Reservoirs	-	-	-	-
Upland Surface Reservoirs	424.96	25,098	2535	27,633
Interceptors	104.92	6,198	-	6,198
Force Mains	145.68	8,604	-	8,604
Pumping Requirements	338.40	19,985	4160	24,145
TOTAL	2581.71	152,477	7142	159,619

TABLE IV-56

COST ESTIMATE - SCHEME 2

STORMWATER STORAGE & COLLECTION SYSTEM

Components	Construction Cost Million Dollars	Amortized Construction Cost Thousand Dollars	Annual Operation and Maintenance Thousand Dollars	Total Annual Treatment Cost Thousand Dollars
Tunnels	1314.60	77,640	147	77,787
Vertical Drops	8.09	478	-	478
Access Shafts	39.05	2,304	-	2,304
Regional Surface Reservoirs	206.01	12,170	300	12,470
Mined Reservoirs	-	-	-	-
Upland Surface Reservoirs	424.96	25,098	2535	27,633
Interceptors	84.83	5,011	-	5,011
Force Mains	145.66	8,604	-	8,604
Pumping Requirements	338.40	19,985	3440	23,425
TOTALS	2561.62	151,290	6422	157,712

Schemes Three and Four - Schemes Three and Four are based on providing mined storage for the urbanized areas and surface storage for sparsely populated outlying areas. The collection system as well as the number and location of upland reservoirs for Schemes Three and Four are essentially the same as in Schemes One and Two. In case of unavailability of such land areas or public opposition to the proposed large surface reservoirs, Schemes Three and Four offer an alternative to Schemes One and Two. Schemes Three and Four also differ from Schemes One and Two with regards to the location and capacity of the treatment facilities as shown in the Table IV-57.

The proposed storm water collection and storage system under Schemes Three and Four is shown in figure IV-59. Both schemes provide pick-up points for treatment at E. China, each of the two mined storage sites and near the mouth of the Huron River. Scheme Four like Scheme Two also provides two additional pick-up points for sub-areas E and G.

Mined reservoirs for Schemes Three and Four provide a total storage of 23,000 million gallons and the rest of the storage is provided in tunnels and upland surface reservoirs. Table IV-58 presents a breakdown of the storage provided in tunnels, upland reservoirs and mined storage. Storage capacity in the tunnels is based on zero surcharge on the mined storage reservoir. Any surcharge on the system will result in additional storage with the tunnel system. Tunnels provide approximately 5400 million gallons of storage.

Schemes Three and Four have two mined storage reservoirs which are located beneath Lake St. Clair. A 12,000 million gallon mined storage reservoir is located in the vicinity of the confluence of Conners Creek with Detroit River and a 11,000 million gallon mined storage reservoir is located near the mouth of the Clinton River. Assuming that fifty percent of the area is available for storage, approximately 2.3 square miles are required for the 12,000 million gallon storage reservoir and 2.1 square miles for 11,000 million gallon storage reservoir.

Pumping facilities are provided under Scheme Three to pump out storm water from the tunnels and mined storage. These facilities have been sized according to the capacity of the treatment facilities which are summarized in Table IV-57.

Tables IV-58 & IV-59 summarize construction and operation and maintenance costs for Schemes Three and Four. Scheme Three has slightly higher capital cost and annual operation and maintenance cost as compared to Scheme Four because of the regional treatment of storm water flows from subareas E and G. Total capital cost figures for Schemes Three and Four, like Schemes One and Two do not include the cost differential associated with local and regional treatment plants for sub-areas E and G.

Total annual cost for Scheme Three is 282.028 million dollars and for Scheme Four is 279.985 based on ammortization of capital cost at 5-½ percent for a 50-year project life.

The comparative summary table shows that on an annual cost basis it costs approximately 122.5 million dollars more to provide mined storage as opposed to surface storage. Evaluation of the desirability of mined storage versus surface storage should include assessment of the environmental benefits provided by the mined storage.

TABLE IV-57

TREATMENT RATES FOR VARIOUS SUB AREAS

Sub Area	Contributing Drainage Area (Sq. Miles)	Treatment Rates + (MGD)	TREATMENT FACILITIES						
			Location	Required Capacity (MGD)					
				Scheme 1	Scheme 2	Scheme 3	Scheme 4	Scheme 5	Scheme 6
A	97.7	122	Algonac	120	120	120	120	120	120
B	334.5	418	Mt. Clemens	820	600	400	400	600	400
C	177.7	222	Conners Creek			620	400	440	400
D	322.8	404	Huron River (Monroe County)	1,220	1,000	1020	800	1,000	800
E	194.3	243	Huron River (Ypsilanti area)		240		240		240
F	438.8	549	Middle Rouge (Plymouth Area)		200		200		200
G	161.1	202							
Total	1726.9	2160							

+ Based on 0.003 inch/hour of runoff from the contributing drainage area.

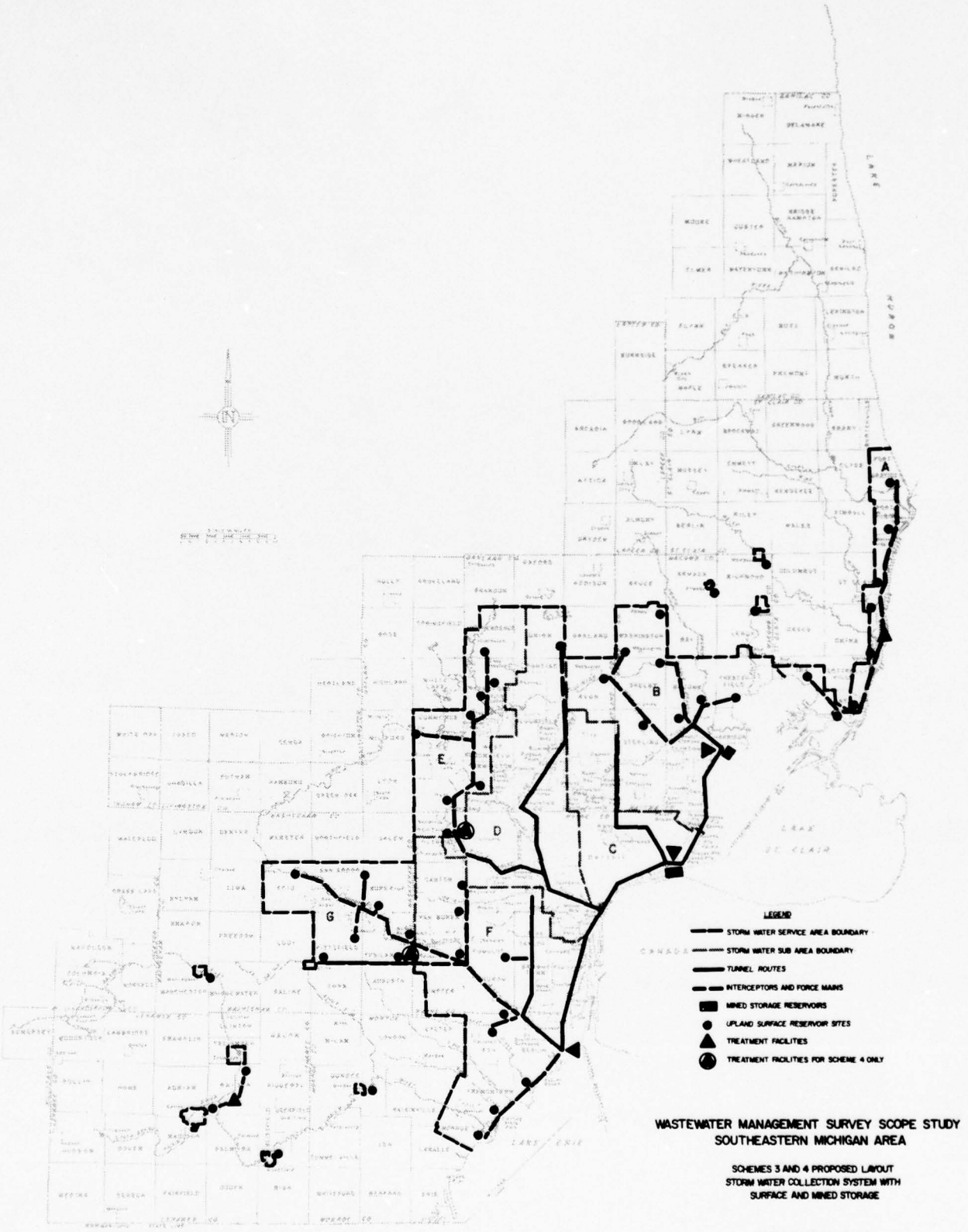

WASTEWATER MANAGEMENT SURVEY SCOPE STUDY
SOUTHEASTERN MICHIGAN AREA

SCHEMES 3 AND 4 PROPOSED LAYOUT
STORM WATER COLLECTION SYSTEM WITH
SURFACE AND MINED STORAGE

FIGURE IV-59

TABLE IV-58

COST ESTIMATE - SCHEME 3

STORMWATER STORAGE & COLLECTION SYSTEM

Components	Construction Cost Million Dollars	Amortized Construction Cost Thousand Dollars	Annual Operation and Maintenance Thousand Dollars	Total Annual Treatment Cost Thousand Dollars
Tunnels	1178.59	69,607	135	69,742
Vertical Drops	8.01	473	-	473
Access Shafts	36.09	2,129	-	2,129
Regional Surface Reservoir	-	-	-	-
Mined Reservoirs	2652.00	156,628	575	157,203
Upland Surface Reservoirs	424.96	25,098	2535	27,633
Interceptors	104.92	6,198	-	6,198
Force Mains	145.68	8,604	-	8,604
Pumping Requirements	99.43	5,872	4174	10,046
TOTAL	4649.68	274,609	7419	282,028

TABLE IV-59

COST ESTIMATE - SCHEME 4

STORMWATER STORAGE & COLLECTION SYSTEM

Components	Construction Cost Million Dollars	Amortized Construction Cost Thousand Dollars	Annual Operation and Maintenance Thousand Dollars	Total Annual Treatment Cost Thousand Dollars
Tunnels	1178.59	69,607	135	69,742
Vertical Drops	8.01	473	-	473
Access Shafts	36.09	2,129	-	2,129
Regional Surface Reservoirs	-	-	-	-
Mined Reservoirs	2652.00	156,628	575	157,203
Upland Surface Reservoirs	424.96	25,098	2535	27,633
Interceptors	84.83	5,011	-	5,011
Force Mains	145.68	8,604	-	8,604
Pumping Requirements	96.95	5,726	3464	9,190
TOTALS	4627.11	273,276	6709	279,985

Schemes Five and Six - Schemes Five and Six consist of a combination of surface and mined storage for urbanized areas and surface storage for sparsely populated areas. The collection system as well as the number and location of upland reservoirs is the same under this scheme as in Schemes One and Three. Schemes Five and Six have been considered because of the high peak power requirements for influent pumping to regional surface reservoirs in Schemes One and Two and the high cost of mined storage in Schemes Three and Four. By providing a minimum of mined storage along with the surface storage, influent pumping requirements can be considerably reduced.

The proposed storm water collection and storage system for Schemes Five and Six are shown in Figure IV-60. Scheme Five has pick-up points for treatment located at E. China, each of the two surface reservoir sites and at the mined storage site. Scheme Six, like Schemes Two and Four also provide two additional pick-up points for sub-areas E & G.

A total of 23,000 million gallons of storage is provided in two regional surface reservoirs and one mined storage reservoirs. The rest of the storage is provided in tunnels and upland reservoirs. Mined storage with a capacity of 5000 million gallons is located beneath Lake St. Clair near the confluence of Conners Creek and the Detroit River. Two regional surface reservoirs, each 8,500 million gallons, are located in Macomb and Monroe Counties as in Schemes One and Two.

Mined storage for these schemes reduces the peak flow pumping requirements for the regional surface reservoirs. Influent pumping facilities for Macomb County regional reservoir are designed to handle 10,000 MGD and Monroe County regional reservoir pumping facilities are designed for 54,000 MGD. A 440 MGD pumping station is also provided for pumping storm water from tunnels and mined storage to a new storm water treatment plant at Conners Creek.

Cost estimates for Schemes Five and Six are summarized in Tables IV-60 & IV-61 Scheme Five has a slightly higher capital cost and annual operation and maintenance cost as compared to Scheme Six because of the regional treatment of stormwater flows for sub-areas E and G. Again capital cost differential associated with local and regional treatment plants for sub-areas E and G have not been included.

TABLE IV-60

COST ESTIMATE - SCHEME 5

STORMWATER STORAGE & COLLECTION SYSTEM

Components	Construction Cost Million Dollars	Amortized Construction Cost Thousand Dollars	Annual Operation and Maintenance Thousand Dollars	Total Annual Treatment Cost Thousand Dollars
Tunnels	1314.60	77,640	147	77,787
Vertical Drops	8.09	478	-	478
Access Shafts	39.05	2,304	-	2,304
Regional Surface Reservoirs	129.82	7,668	240	7,908
Mined Reservoirs	585.00	34,550	125	34,675
Upland Surface Reservoirs	424.96	25,098	2535	27,633
Interceptors	104.92	6,198	-	6,198
Force Mains	145.68	8,604	-	8,604
Pumping Requirements	229.04	13,527	4166	17,693
TOTALS	2981.16	176,067	7213	183,280

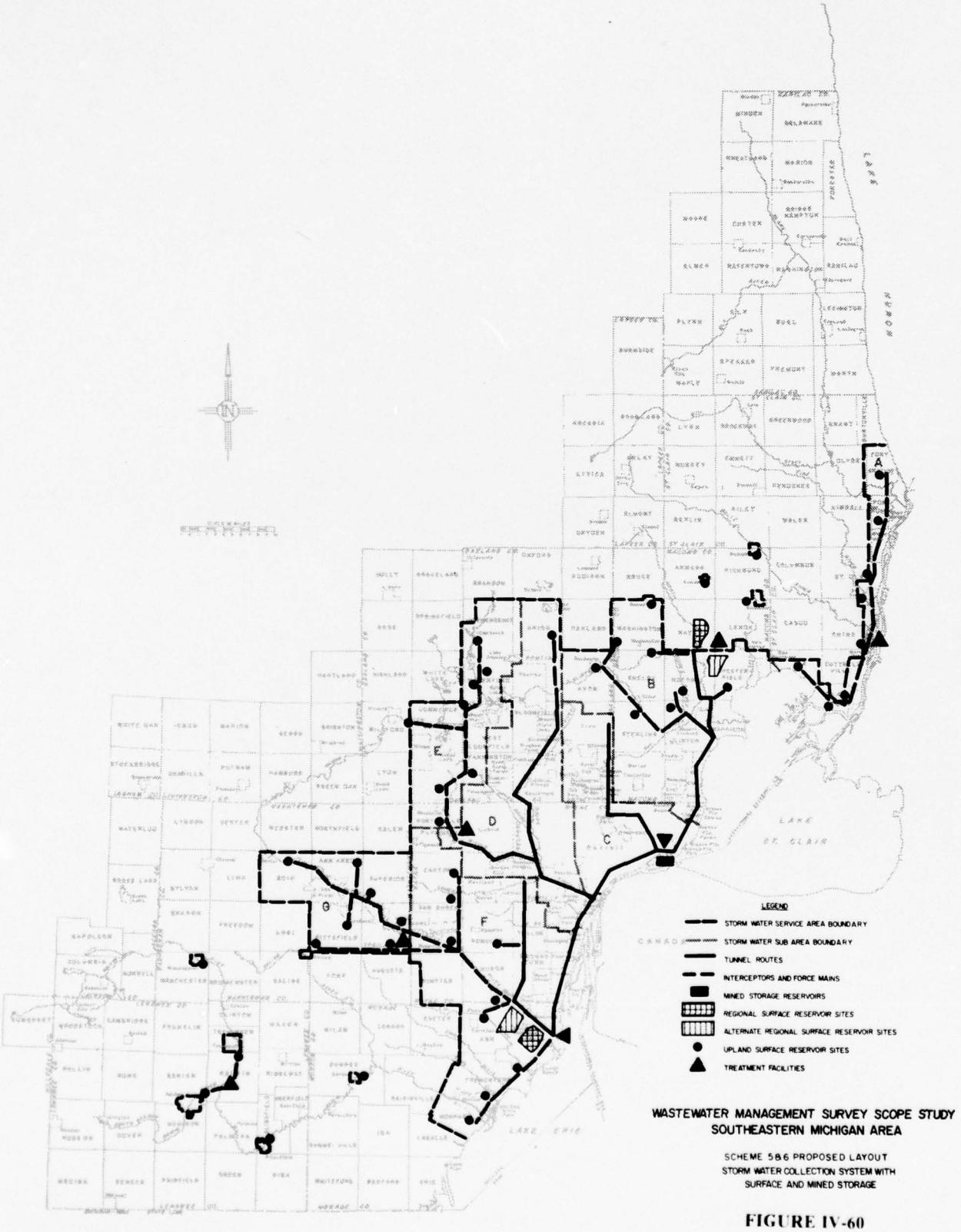
A
B
C
D
E
F
G
LEGEND
STORM WATER SERVICE AREA BOUNDARY
STORM WATER SUB AREA BOUNDARY
TUNNEL ROUTES
INTERCEPTORS AND FORCE MAINS
MINED STORAGE RESERVOIRS
REGIONAL SURFACE RESERVOIR SITES
ALTERNATE REGIONAL SURFACE RESERVOIR SITES
UPLAND SURFACE RESERVOIR SITES
TREATMENT FACILITIES
WASTEWATER MANAGEMENT SURVEY SCOPE STUDY
SOUTHEASTERN MICHIGAN AREA
SCHEME 586 PROPOSED LAYOUT
STORM WATER COLLECTION SYSTEM WITH
SURFACE AND MINED STORAGE

FIGURE IV-60

TABLE IV-61

COST ESTIMATE - SCHEME 6

STORMWATER COLLECTION & STORAGE SYSTEM

Components	Construction Cost Million Dollars	Amortized Construction Cost Thousand Dollars	Annual Operation and Maintenance Thousand Dollars	Total Annual Treatment Cost Thousand Dollars
Tunnels	1314.60	77,640	147	77,787
Vertical Drops	8.09	478	-	478
Access Shafts	39.05	2,304	-	2,304
Regional Surface Reservoirs	129.82	7,668	240	7,908
Mined Reservoirs	585.00	34,550	125	34,675
Upland Surface Reservoirs	424.96	25,098	2535	27,633
Interceptors	84.83	5,011	-	5,011
Force Mains	145.68	8,604	-	8,604
Pumping Requirements	226.56	13,381	3464	16,845
TOTALS	2958.59	174,734	6511	181,245

The estimated costs of Scheme Five and Six are considerably less than Schemes Three and Four but higher than Schemes One and Two. The major cost difference between the various schemes is due to the type of regional storage (mined or surface) that is used for the urbanized areas. Schemes Three and Four are based on total mined storage for these areas while Schemes One and Two are based on total surface storage. The cost of providing mined storage is considerably more than that of the surface storage which accounts for higher costs for Schemes Three and Four. For the same reason Schemes Five and Six are approximately 400 million dollars costlier in capital cost than Scheme One. This cost difference is slightly misleading without including the impact of the proposed schemes on the available sources of electrical power supply in the area. Scheme One has very high peak power requirements for pumping peak stormwater flows from the tunnel system to the surface reservoir. By including mined storage in Schemes Five and Six these requirements are reduced by approximately forty percent. Mined storage also stablizes the power requirements. The resulting cost savings because of the reduced power requirements should be estimated in order to compare the schemes on a realistic basis.

SELECTION OF A STORMWATER PLAN

Scheme Two was selected as the representative stormwater plan because of the various advantages it offers over the other five schemes. It would utilize deep tunnels and large surface reservoirs in the highly urbanized areas and multiple surface storage reservoirs in the less urbanized outlying areas.

The estimated construction cost of Scheme Two is lower than any of the other plans. See Table IV-63. The major cost difference between the various schemes is due to the type of regional storage (mined or surface) proposed for the urbanized areas. The cost of providing mined storage is considerably more than for providing surface storage. For this reason Schemes Three and Four, which are based on total mined storage for these areas, and Schemes Five and Six, which would have partial mined storage, are approximately 2.1 billion and 400 million dollars respectively more expensive than Scheme Two.

Scheme One is similar to Scheme Two with the exception that it would not be designed with facilities to enable treatment and discharge of stormwater overflows to the Huron River near Ypsilanti and to the Rouge River near Plymouth. The collection and storage system construction cost is $20 million less for Scheme Two because of the reduction in sizes and lengths of the interceptors required for transporting stormwater to tunnels. The natural water courses would convey this flow after it has been treated in stormwater plants near Ypsilanti and Plymouth.

Maintenance and repairs on surface storage facilities would be more easily performed than on mined storage systems since more conventional equipment and methods can be used above ground than below. The safety hazards associated with this maintenance and repair work is also much less with above ground work.

Scheme Six, although not selected as the representative plan, has many advantages which makes it the primary alternative to Scheme Two. Scheme Six would provide both mined storage and above ground storage for the urbanized area. Although Scheme Six is approximately 400 million dollars more expensive on a capital cost basis because of the mined storage, this underground storage capacity significantly reduces the amounts of peak power required for pumping peak stormwater flows from the tunnel system to the surface. In view of recent concerns over energy shortages, Scheme Six may be more desireable in the future, even in terms of total costs.

Scheme Six would use approximately twenty percent less land than Scheme Two for regional surface reservoirs. Much of this land would not be required for construction in the first phases of the project. Therefore Scheme Six would provide more time for the acquisition and relocation processes associated with obtaining this required land.

The inclusion of mined storage and a treatment plant near Conners Creek in Scheme Six would provide additional operational flexibility to the system. For example, it may be possible to operate the Conners Creek treatment plant on a continuous basis with other regional plants operated only as required. This mode of operation could reduce annual operation cost for treatment facilities.

These advantages depend heavily on the success of the proposed mined storage for stormwater and combined sewer overflows. The problems associated with mined storage such as: the time of construction for mined storage being greater than that for surface storage; mined storage creating additional solid disposal problems of mined material; and the amount of operation and maintenance associated with a mined storage facility; kept Scheme Six from being selected over Scheme Two.

RECOMMENDATIONS FOR FUTURE STUDIES

Since this study proposes the use of many new techniques and concepts it should be noted that some areas will require additional study and investigation for designing and implementing the proposed stormwater collection and storage scheme. These areas are discussed in the following sections.

HYDROLOGIC STUDIES

Hydrologic considerations form the backbone of a stormwater collection and storage system design. Peak flow rates and volume of stormwater runoff are two such important considerations. The

unit hydrograph-infiltration capacity approach used in the report for estimating peak flow rates should be further modified using computer aids for evaluating the effect of the direction and movement of storms. Using this information, storage systems should be tested by computer simulation techniques to determine if any modifications are necessary.

GEOLOGIC STUDIES

More detailed geologic investigations will be required to determine suitable rock formations for locating tunnel routes, mined storage and pumping facilities, and for examining specific construction areas where hazardous conditions such as the occurance of methane gas or excessive amounts of groundwater flow may occur. Test borings, geologic mapping, studies of existing well logs and proven geophysical techniques are some of the conventional underground exploration methods which can be employed. The more recent techniques for investigating underground conditions employ remote sensing devices, seismic holography, electromagnetic pulse sounding, and optical scanning for structural features. These various methods should be studied in preparation of a program for geologic investigations.

OPTIMIZATION OF DESIGN

Before detailed design is performed for the various components utilized for stormwater collection and storage, the overall system must be optimized. Hydraulic analysis of the tunnels using computer assistance is required in order to determine the effects of slope, lining, surcharge and various storm patterns on the required sizes of tunnels. Flood routing procedures can be used to minimize the required storage without sacrificing the integrity of the program. As more detailed power costs become available, it will be possible to optimize the amount of storage that should be provided in the regional surface storage versus mined reservoirs.

AERATION STUDIES

The need for providing aeration in stormwater collection and storage systems was considered during the study program. It was concluded that aeration will not be required because of the very rare circumstances under which anaerobic conditions will occur in the system. The very slow rate of oxygen consumption by the stormwater was a primary reason for arriving at this conclusion. It is recommended that pilot plant investigations incorporating the proposed methods of operations of storage facilities should be undertaken in order to establish the validity of the above assumption. Studies should be conducted on both separate storm sewer and combined storm sewer overflows. These same studies may be used to investigate the amount of solids accumulation that may be expected in the facilities which will decide the operation and maintenance necessary for the proposed storage reservoirs.

ALTERNATIVES CONSIDERED

The previous four chapters discussed the initial investigations in which a range of technical components were developed. In this chapter these components are combined to form eleven complete wastewater management alternatives. These alternatives cover the entire range of wastewater management considerations, including: wastewater treatment, collection and conveyance, stormwater control, sludge handling and disposal, cost estimates, and estimates of land, chemical, energy and manpower requirements.

Seven alternatives were formed which utilize only one of the three methods of treatment for municipal-industrial wastewater. Alternatives utilizing the same method of M&I treatment resulted from variations in plant locations and sludge handling and treatment methods. The remaining four alternatives were formed by combining the most effective wastewater management components for various parts of the study area. This resulted in alternatives which contained a combination of the three wastewater treatment methods.

The alternatives are identified by names which describe the treatment method proposed for municipal-industrial wastewater and include:

Advanced Wastewater Treatment Alternative One
Advanced Wastewater Treatment Alternative Two
Independent Physical-Chemical Treatment Alternative One
Independent Physical-Chemical Treatment Alternative Two
Independent Physical-Chemical Treatment Alternative Three
Land Irrigation Treatment Alternative One
Land Irrigation Treatment Alternative Two
Combination Wastewater Treatment Alternative One
Combination Wastewater Treatment Alternative Two
Combination Wastewater Treatment Alternative Three
Combination Wastewater Treatment Alternative Four

SIMILARITIES BETWEEN THE ALTERNATIVES

The following sections describe the eleven alternatives previously named. Each section includes a general description of the alternative with discussions and tables describing the sludge handling and disposal methods, the system costs, the land requirements, the chemical and energy demands, and the manpower requirements for each alternative. There are some discussions which are common to many of these alternatives; they are presented in the following paragraphs of this section.

In all of the alternatives, existing interceptor systems would be extended and additional transmission lines would be constructed to convey municipal-industrial wastewater from existing collection systems to proposed treatment sites. Major interceptors would include: an interceptor along the shoreline in southern St. Clair County, an interceptor along the Detroit River to the Huron River, an interceptor from Ann Arbor following the Huron River to its mouth, and an interceptor following Hannan Road north of the Huron River. These systems are shown in the cost tables of the alternatives, and detailed design and cost information for them can be found in Chapter IV and in the Addendum to this appendix.

The collection and storage system designed for handling combined sewer overflows and urban storm runoff would be essentially Scheme Two which is described in detail in Chapter IV. This stormwater system would utilize forty-nine community storage reservoirs ranging in size from 80 to 690 acres. These and two regional reservoirs of 3,120 acres each would be used for temporary storage of peak flows. Treatment of collected stormwater would be carried out at six IPCT facilities designed specifically for stormwater treatment. Three of these plants would be constructed in conjunction with the municipal-industrial treatment facilities at East China, the Huron River, and Adrian-Tecumseh. These collocated plants would share specific treatment process facilities. The combined use of some of these processes can be made feasible due to the intermittant nature of stormwater treatment. Operation and maintenance workers and supervisory personnel would serve the collocated facility and

therefore the combined work force would be optimized. Another IPCT plant would be located adjacent to the regional storage reservoir in Macomb County to enable greater control of the stormwater system components and minimize disruption which might be caused if these facilities were located at separate sites. The remaining two IPCT plants would be located on the Rouge River at Plymouth and on the Huron River just south of Belleville Lake. These plants would treat the equalized stormwater flows and discharge them into the receiving stream which they would have been part of had they not been intercepted, collected, and treated. In some cases, Scheme One would be used, this system is similar to Scheme Two except that the treatment plants at Plymouth and Ypsilanti would be eliminated. This scheme is used primarily when land treatment is proposed within the alternative.

An extensive system of interceptors and tunnels would be required to collect separate storm sewer discharges and combined sewer overflows at the present points of discharge to surface waters. Normal sewer construction techniques would be utilized in less urbanized areas; however, the greater size of sewers required in highly urbanized areas and the expected construction problems made design of hard rock tunnels necessary.

Solids collected in the stormwater storage facilities would be allowed to accumulate and would be removed periodically as a dry material. This would be accomplished by emptying a storage module, allowing the sludge to dry naturally, and removing the material mechanically.

System costs are presented in tabular form according to the various categories which make up the alternative. These may include: Municipal-Industrial plants, Stormwater plants, Land Treatment systems, Sludge landfill sites, interception and transmission lines, and a stormwater collection and storage system. Further divisions are made within these categories to define the cost of treatment plants and other facilities at specific locations. Detailed cost analysis of these facilities can be found in the addendum to this appendix as specified in the alternative sections. The costs presented in these tables are based on an interest rate of 5½ percent and a design life of the project of 50 years.

A land use summary is presented in tabular form for each alternative. Land would be required for treatment plants, stormwater storage facilities, land treatment facilities, and sludge disposal sites. Land for treatment sites may be additional land for upgrading an existing facility or the total land required for a new plant. The land required for each plant would depend on the final plant layout, the topography, and the size of the tract available. The above ground stormwater storage facilities would require the direct use of large amounts of land. In all of the alternatives except those utilizing land treatment, these facilities would account for the bulk of the land use requirements. Land treatment sites and treatment lagoons require extensive amounts of land per million gallons of wastewater treated. In alternatives which propose land treatment, these facilities will account for the major portion of the land requirement.

The amount of land required for sludge disposal depends on the sludge treatment method selected. Incineration and recalcination reduce the amount of sludge to a minimum and therefore require the least land for disposal. Landfilling of dewatered sludge requires more land than landfilling incinerated sludge but less than landspreading of raw sludge, which requires the most land.

The chemical and energy requirements of each alternative are presented in tabular form in each section. The categories which have been estimated include: electrical power, fuel oil, diesel fuel, natural gas, chlorine, lime and methanol.

The peak electrical power demand required to operate the stormwater storage system is a key energy requirement in each alternative. Because the water would be stored above the collection facilities, pumping capacities would have to be adequate to evacuate the tunnels during major storms. It is possible that additional power facilities would have to be built in order to meet this peak requirement. It is felt, however, that other peak and average power requirements could be met by the existing power generating facilities.

The amount of fuel oil, diesel fuel, and natural gas required for each alternative is primarily related to the sludge treatment and disposal methods being used. Fuel oil and natural gas would be used primarily for recalcination and incineration. Diesel fuel would be used to operate the trucks which haul the sludge or waste ash material to the landfill site.

Large quantities of chlorine would be required for disinfection of the final effluent from treatment plants and secondary treatment lagoons. Large quantities of chlorine would also be required in the break point chlorination process for ammonia removal in IPCT plants.

Lime would be required in all of the proposed treatment plants for removal of nutrients and heavy metals in the two-stage lime clarification process. Methanol would only be required in the AWT plants for the nitrification-denitrification process.

The manpower required to operate each alternative has been estimated and is presented in tabular form in each section. The estimated workforce required at the municipal-industrial plants is considered adequate to operate the plants at their specified design flows. The work force required to operate and maintain the stormwater treatment plants was estimated to be adequate to operate the plants at 50 percent of the maximum design capacity. Overtime work and additional employment, on a temporary basis would be required during the wettest months of the year and during years of above average rainfall. The labor estimates do not include manpower estimates for farming operations at land treatment sites. For planning purposes the cost of farm operation, exclusive of irrigation operations, has been assumed to be about equal to the field value of the farm products being produced. All farm operations would be contracted, including disposal of crops, and the resulting sales would provide for payment of these operations. Estimates for maintenance of the irrigation facilities are included in the table.

ADVANCED WASTEWATER TREATMENT ALTERNATIVE ONE

This alternative proposes the use of advanced wastewater treatment as the primary method of municipal-industrial wastewater treatment. The objective of the AWT alternatives is to make maximum use of existing treatment facilities with minimum description to meet the higher quality effluent standard. The M&I treatment system, see Figure V-1, would consist of seven regional AWT facilities and a major interceptor network as shown. Existing plants located at Port Huron, Detroit, Wyandotte, and Monroe would be upgraded and expanded to meet the requirements of the system. New AWT facilities would be constructed at East China, the Huron River, and Adrian-Tecumseh. Additional AWT facilities would serve outlying communities until growth and future development would economically justify the continuation of the regional interceptor network.

The stormwater control system, shown in Figure V-2, utilizes the collection and storage system described in Scheme Two and the IPCT treatment system described in the similarities section.

Sludge Handling & Disposal - Table V-1 identifies the treatment plant sites, their design flows, and the sludge handling and disposal methods proposed in this alternative. Sewage sludge, in all but two plants, would be dewatered on vacuum filters or in centrifuges and hauled to sanitary landfills which would be used only for disposal of sewage sludes. This would eliminate the need to dewater the sludge to the high degree required for disposal to a municipal sanitary landfill which accepts other forms of solid waste. Sewage sludges from plants at Wyandotte and Monroe would be burned in the existing incinerators until replacement became necessary. At that time, the incinerators would be abandoned and dewatered sludge would be hauled to landfill sites. Lime sludges would be recalcined at the larger plants to reduce their demand for fresh lime. Lime sludges from smaller plants would be dewatered and hauled to landfill sites for disposal.

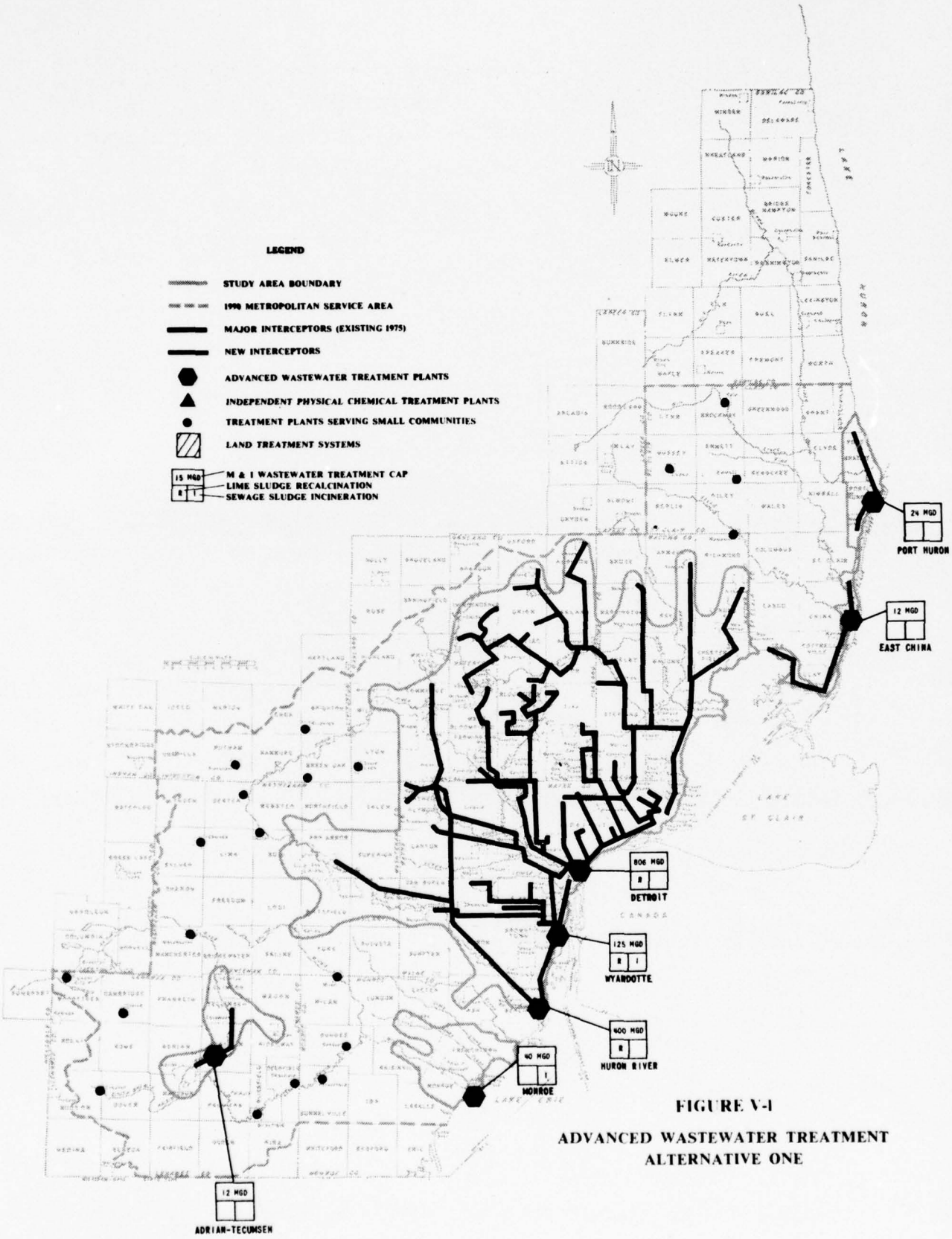

FIGURE V-1

ADVANCED WASTEWATER TREATMENT ALTERNATIVE ONE

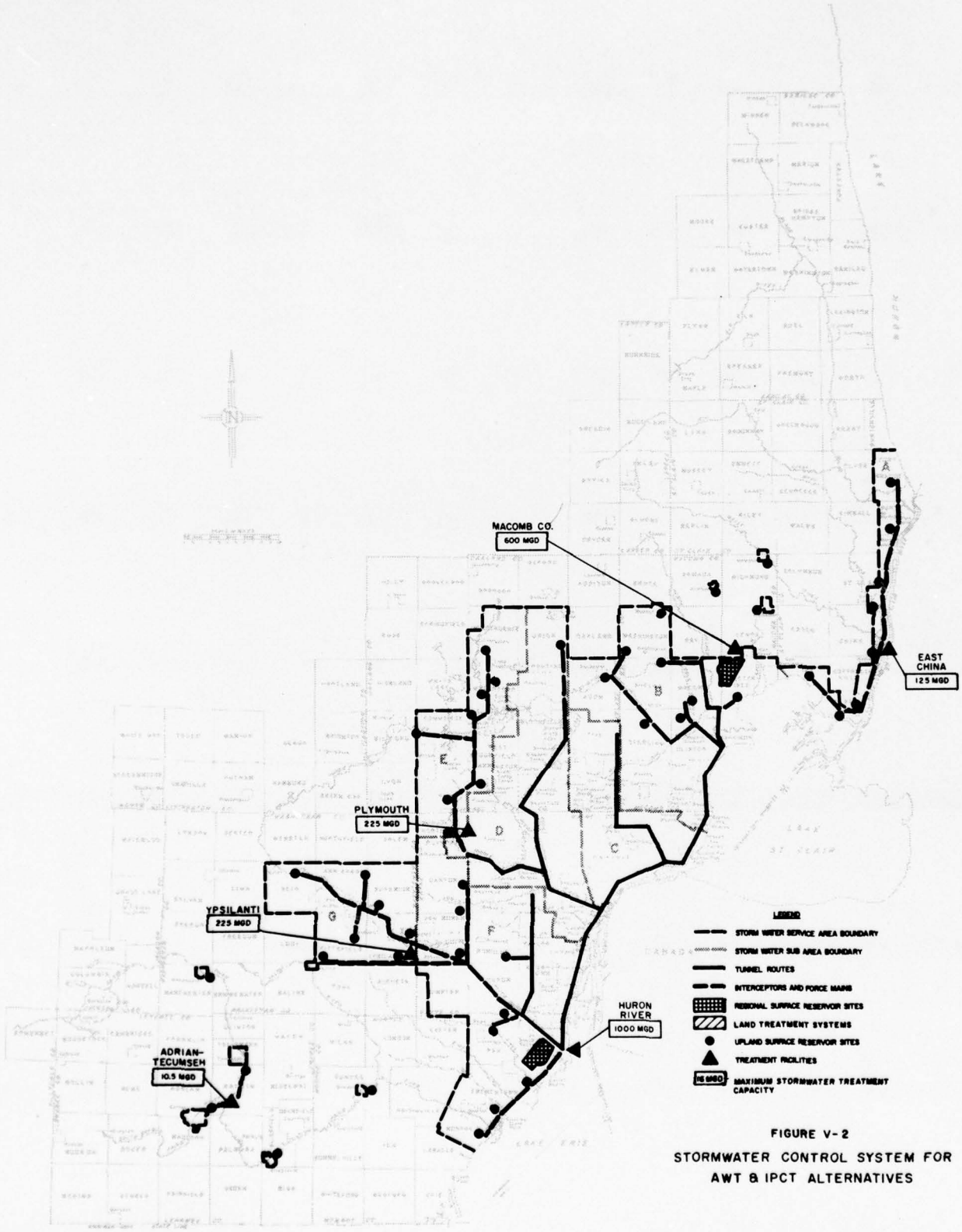

FIGURE V-2

STORMWATER CONTROL SYSTEM FOR AWT & IPCT ALTERNATIVES

TABLE V-1

ADVANCED WASTEWATER TREATMENT ALTERNATIVE ONE

	DESIGN TREATMENT CAPACITY		COMBUSTION PROCESSES			ULTIMATE SOLIDS DISPOSAL	
	STORM RUNOFF (MGD)	MUNICIPAL-INDUSTRIAL (MGD)	SEWAGE SLUDGE INCINERATION (Ton/Day)	LIME SLUDGE RECALCINATION (Ton/Day)	ACT. CARBON REGENERATION (Ton/Day)	SANITARY LANDFILL (Ton/Day)	LAND APPLICATION (Ton/Day)
Port Huron Plant	--	24 AWT	--	--	3	45	--
East China Plant	125 IPCT	12 AWT	--	--	17	123	--
Macomb Co. Plant	600	--	--	1226	75	72	--
Detroit Plant	--	806 AWT	--	895	100	862	--
Wyandotte Plant	--	125 AWT	274	139	16	81	--
Plymouth Plant	225 IPCT	--	--	600	28	31	--
Ypsilanti Plant	225 IPCT	--	--	600	28	31	--
Huron River Plant	1000 IPCT	400 AWT	--	2487	175	620	--
Monroe Plant	--	40 AWT	28	--	5	47	--
Adrian-Tecumseh Plant	10.5 IPCT	12 AWT	--	--	3	38	--

System Costs - Table V-2 presents a breakdown of costs for Advanced Wastewater Treatment Alternative One. Detailed cost analyses of the components can be found in the tables to this appendix as specified below.

1. Municipal-industrial Plants - Tables A-10, A-12, A-24, and A-9.
2. Stormwater Plants - Tables B-26, B-26 and B-27.
3. Storm and M&I Plants - Tables A-17, A-4 and A-7.
4. M&I Interceptors - Table IV-3 and IV-4 (Systems 1, 4 & 8).
5. Stormwater Collection and Storage - Table IV-56.
6. Landfill Sites - Table

Resource Requirements - The land use requirements for this alternative, as shown in Table V-3, indicate the stormwater collection and storage system would require the most significant amount of land. The land required for sludge disposal is also significant because volume reduction of sludge by incineration would be limited.

Chemical and energy requirements are shown in Table V-4. As in most other alternatives the peak power requirement is mainly for stormwater pumping. The amount of fuel oil, diesel fuel, and natural gas required is indicative of a system with limited incineration of sewage sludges. Chemical requirements are characteristic of an AWT system.

Manpower requirements are presented in Table V-5. The estimate has been broken down into various labor categories for the individual facilities.

TABLE V-2

SUMMARY COST SHEET

ADVANCED WASTEWATER TREATMENT ALTERNATIVE ONE

	Construction Cost Million Dollars	Amortized Construction Cost Million Dollars	Amortized Replacement Cost Million Dollars	Annual Operation and Maintenance Million Dollars	Total Annual Treatment Cost Million Dollars
M&I PLANTS					
Monroe (AWT)	31.63	1.869	.077	2.880	4.826
Wyandotte (AWT)	68.10	4.024	.186	8.156	12.366
Detroit (AWT)	381.20	22.515	.610	40.278	63.403
Port Huron (AWT)	16.87	.996	.049	1.808	2.853
STORMWATER PLANTS					
Ypsilanti (IPCT)	73.80	4.361	.095	3.346	7.802
Plymouth (IPCT)	73.80	4.361	.095	3.346	7.802
Macomb Co. (IPCT)	181.50	10.725	.197	8.312	19.234
STORM & M&I PLANTS					
Huron River (IPCT-AWT)	528.80	31.230	.646	34.582	66.458
East China (IPCT-AWT)	59.93	3.543	.079	2.913	6.535
Adrian - Tecumseh (IPCT-AWT)	19.85	1.175	.041	1.385	2.601
M&I INTERCEPTORS					
St. Clair Co. System	11.04	.652	--	.082	.734
Detroit System	42.52	2.512	--	--	2.512
Adrian System	3.50	.207	--	.017	.224
Huron River System	157.55	9.305	--	.741	10.046
STORMWATER COLLECTION & STORAGE SYSTEM	2561.62	151.290	--	6.422	157.712
LANDFILL SITES					
Lenawee Co.	18.07	1.066	.133	2.258	3.457
St. Clair Co.	6.85	.405	.059	1.071	1.535
TOTAL SYSTEM COSTS	4236.63	250.236	2.267	117.597	370.100

TABLE V-3

LAND USE SUMMARY

AWT - 1

Facility	Land (acres)	Land Use
Port Huron	38*	Wastewater Treatment Plant
East China	87	Wastewater Treatment Plant
Macomb Co	160	Stormwater Treatment Plant
Detroit	320*	Wastewater Treatment Plant
Wyandotte	100*	Wastewater Treatment Plant
Mouth of Huron River	425	Wastewater Treatment Plant
Plymouth	85	Stormwater Treatment Plant
Ypsilanti	85	Stormwater Treatment Plant
Monroe	50*	Wastewater Treatment Plant
Adrian-Tecumseh	32	Wastewater Treatment Plant
St. Clair Co Landfill	1449	Sanitary Landfill of Sewage Sludge Lime Sludge and Ash
Lenewee Co Landfill	5038	Sanitary Landfill of Sewage Sludge Lime Sludge and Ash
Storm Collection and Storage System	23,500	Underground and Surface Storage Facilities for Urban Storm Runoff
TOTAL	31,369	

*In addition to existing plant site

TABLE V-4

ENERGY AND CHEMICAL REQUIREMENTS
ADVANCED WASTEWATER TREATMENT ALTERNATIVE ONE

	ELECTRICAL POWER		CHLORINE		LIME		METHANOL	NATURAL GAS	FUEL OIL	DIESEL FUEL
	Peak MW	Average MW	Maximum T/D	Average T/D	Maximum T/D	Average T/D	Average T/D	Average MCF/D*	Average 100 G/D	Average GAL/D
Stormwater Collection & Storage System	1,868.5	43.4	--	--	--	--	--	--	--	1600
Port Huron	4.6	4.6	0.9	0.9	20	20	3.5	123	6.0	33
East China	9.4	4.6	16.5	5.5	114	40	2.1	156	8.8	44
Macomb Co.	30.0	9.4	175.0	51.0	425	123	--	2036	145.2	44
Detroit	131.0	131.0	30.0	30.0	633	633	117.7	8090	605.5	877
Wyandotte	22.0	22.0	4.6	4.6	98	98	18.3	2871	204.9	77
Huron River	114.8	82.0	306.9	89.9	1022	519	58.4	6288	565.5	997
Plymouth	12.0	3.8	28.0	8.1	160	46	--	975	69.6	44
Ypsilanti	12.0	3.8	28.0	8.1	160	46	--	975	69.6	22
Monroe	7.4	7.4	1.5	1.5	36	36	4.0	1534	59.2	22
Adrian-Tecumseh	3.1	2.6	2.1	1.0	20	13	2.1	95	6.6	22
Conveyance Systems	--	0.033	--	--	--	--	--	--	--	--
TOTAL	2214.8	314.6	593.5	200.6	2688	1574	206.1	23,143	174.09	3782

* MCF = 1,000 Cubic Feet

TABLE V-5

MANPOWER REQUIREMENTS

ADVANCED WASTEWATER TREATMENT ALTERNATIVE ONE

	Superintendents & Supervisors	Foremen	Operators	Electricians	Maintenance Mechanics	Laboratory Technicians	Laborers	Other	Total Manpower
Port Huron	4	4	40	3	7	5	14	1	78
Eash China	4	7	62	5	9	7	27	5	126
Macomb Co.	6	24	115	12	19	9	60	8	253
Detroit	23	128	704	64	80	46	300	19	1364
Plymouth	4	10	51	7	9	1	27	5	114
Ypsilanti	4	10	51	7	9	1	27	5	114
Wyandotte	8	24	113	10	14	8	50	5	232
Huron River	21	108	541	52	74	39	250	21	1106
Monroe	5	9	50	4	9	6	20	3	106
Adrian - Tecumseh	4	4	35	2	5	5	11	1	67
St. Clair Co. Fill	1	2	18	--	--	--	2	2	25
Lenawee Co. Fill	1	3	53	--	--	--	2	2	61
Storm Collection & Storage System	2	10	50	--	--	--	20	--	82
Total Manpower	87	343	1883	166	235	127	810	77	3728

ADVANCED WASTEWATER TREATMENT ALTERNATIVE TWO

This alternative is identical to AWT Alternative One with the exception of the methods proposed for sewage sludge handling. The majority of the municipal-industrial wastewater would be treated in seven advanced wastewater plants located as shown in Figure V-3. Also shown are the additional interceptors and transmission lines which would be necessary for implementation of this alternative. The stormwater control system is shown in Figure V-2. The collection and storage system, Scheme Two, and the IPCT treatment system are described in the similarities section.

Sludge Handling & Disposal - Table V-6 identifies the treatment plant sites, their design flows, and the sludge handling and disposal methods proposed for this alternative. Sewage sludges would be incinerated at the treatment plant sites and the resulting residue would be disposed of by landfill. Incineration of sludge significantly reduces the waste volume and results in a more stable fill material than does the dewatering process. Lime sludges would be recalcined to reclaim and reuse the lime and to reduce the waste material. At larger plants recalcination would take place on the site; however, smaller sized plants at Port Huron, Monroe, and Adrian-Tecumseh would not recalcine lime sludge at the plant sites but would haul it to the nearest plant with recalcination facilities. The amounts of lime sludge which would be generated at these smaller plants do not make it advantageous to recalcine on the site; but, with almost no increase in the capital investment for recalcination facilities, the sludge could be treated at other sites.

System Costs - The cost breakdown for AWT Alternative Two is presented in Table V-7. More detailed cost analyses of the components listed in this table can be found in the tables of this appendix as specified below.

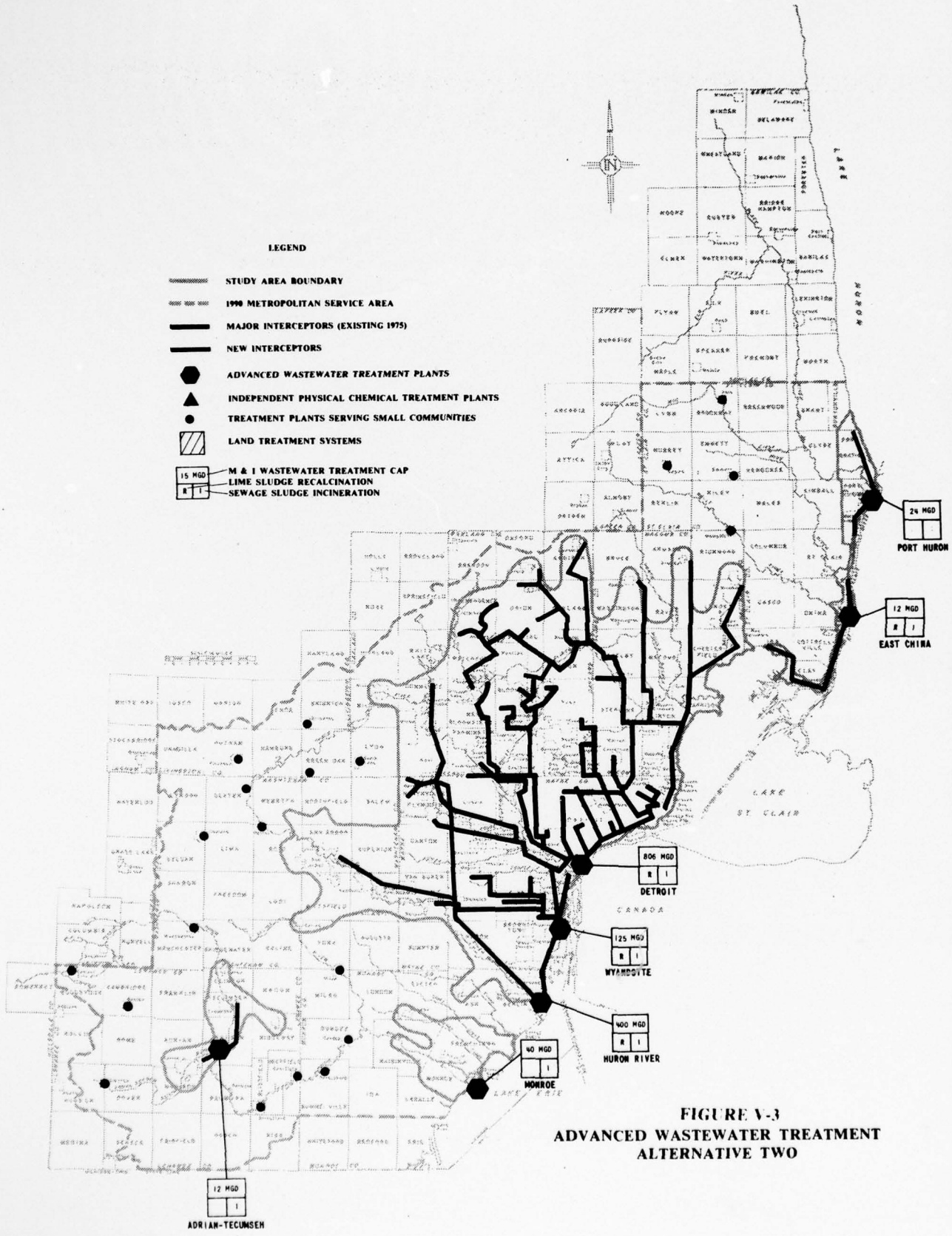

FIGURE V-3
ADVANCED WASTEWATER TREATMENT
ALTERNATIVE TWO

1. Municipal-industrial Plants - Tables A-10, A-12, A-22, and A-9.
2. Stormwater Plants - Table B-26, B-26, and B-27.
3. Storm and M&I Plants - A-16, A-2, and A-6.
4. M&I Interceptors - Table IV-3 (Systems 1, 4, & 8)
5. Stormwater Collection and Storage - Table IV-56.
6. Landfill Sites - Table F-2.

TABLE V-6

ADVANCED WASTEWATER TREATMENT ALTERNATIVE TWO

	DESIGN TREATMENT CAPACITY		COMBUSTION PROCESSES			ULTIMATE SOLIDS DISPOSAL	
	STORM RUNOFF (MGD)	MUNICIPAL-INDUSTRIAL (MGD)	SEWAGE SLUDGE INCINERATION (Ton/Day)	LIME SLUDGE RECALCINATION (Ton/Day)	ACT. CARBON REGENERATION (Ton/Day)	SANITARY LANDFILL (Ton/Day)	LAND APPLICATION (Ton/Day)
Port Huron Plant	–	24 AWT	19	–	3	8	–
East China Plant	125 IPCT	12 AWT	13	374	17	72	–
Macomb Co. Plant	600 IPCT	–	–	1226	75	72	–
Detroit Plant	–	806 AWT	620	895	100	520	–
Wyandotte Plant	–	125 AWT	274	139	16	81	–
Plymouth Plant	225 IPCT	–	–	600	28	31	–
Ypsilanti Plant	225 IPCT	–	–	600	28	31	–
Huron River Plant	1000 IPCT	400 AWT	308	2584	175	259	–
Monroe Plant	–	40 AWT	28	–	5	5	–
Adrian-Tecumseh Plant	10.5 IPCT	12 AWT	13	–	3	2	–

Resource Requirements - The land use requirements for this alternative are shown in Table V-8. As in AWT Alternative One the stormwater collection and storage facilities would make the greatest land use demands. The amount of land required for sludge disposal would be significantly reduced, however, due to increased incineration of sewage sludge.

TABLE V-7
SUMMARY COST SHEET

ADVANCED WASTEWATER TREATMENT ALTERNATIVE TWO

	Construction Cost Million Dollars	Amortized Construction Cost Million Dollars	Amortized Replacement Cost Million Dollars	Annual Operation and Maintenance Million Dollars	Total Annual Treatment Cost Million Dollars
M&I PLANTS					
Monroe (AWT)	31.63	1.869	.077	2.880	4.826
Wyandotte (AWT)	68.1	4.024	.186	8.156	12.366
Detroit (AWT)	385.3	22.758	.780	42.632	66.170
Port Huron (AWT)	16.87	.996	.064	1.875	2.935
STORMWATER PLANTS					
Ypsilanti (IPCT)	73.80	4.361	.095	3.346	7.802
Plymouth (IPCT)	73.80	4.361	.095	3.346	7.802
Macomb Co. (IPCT)	181.50	10.725	.197	8.312	19.234
STORM & M&I PLANTS					
Huron River (IPCT-AWT)	536.6	31.691	.739	35.793	68.223
East China (IPCT-AWT)	62.52	3.696	.110	3.392	7.198
Adrian - Tecumseh (IPCT-AWT)	21.00	1.243	.055	1.436	2.734
M&I INTERCEPTOR SYSTEMS					
St. Clair Co. System	11.04	.652	--	.082	.734
Detroit System	42.52	2.512	--	--	2.512
Huron River System	157.55	9.305	--	.741	10.046
Adrian System	3.50	.207	--	.017	.224
STORM COLLECTION & STORAGE SYSTEM	2561.62	151.290	--	6.422	157.712
SLUDGE LANDFILL					
Lenawee Co. Site	10.61	.628	.113	1.838	2.579
St. Clair Co. Site	6.32	.373	.076	1.138	1.587
TOTAL SYSTEM COSTS	4244.28	250.691	2.587	121.406	374.68

TABLE V-8

LAND USE SUMMARY

AWT - 2

Facility	Land (acres)	Land Use
Port Huron	38*	Wastewater Treatment Plant
East China	87	Wastewater Treatment Plant
Macomb Co	160	Stormwater Treatment Plant
Detroit	320*	Wastewater Treatment Plant
Wyandotte	100*	Wastewater Treatment Plant
Mouth of Huron River	425	Wastewater Treatment Plant
Plymouth	85	Stormwater Treatment Plant
Ypsilanti	85	Stormwater Treatment Plant
Monroe	50	Wastewater Treatment Plant
Adrian-Tecumseh	32	Wastewater Treatment Plant
St. Clair Co Landfill	1,125	Landfill of Incinerator and Waste Lime Ash and Storm Solids
Lenewee Co Landfill	2,076	Same as Above
Storm Collection and Storage System	23,500	Underground and Surface Storage Facilities for Urban Storm Runoff
TOTAL	28,083	

*In addition to existing plant site

Energy and chemical requirements, as shown in Table V-9, are similar to AWT Alternative One with the exception of the fuel oil, diesel fuel, and natural gas categories. This difference is again due to the increase in sewage sludge incineration proposed for this alternative. External energy must be applied to sewage sludge for complete combustion; therefore, an increase in natural gas and fuel oil is required. Because of the volume reduction, fewer trips to a landfill area would be required and therefore diesel fuel requirements are reduced.

Table V-10 presents the manpower requirements for this alternative. They are very similar to those presented for AWT Alternative One.

TABLE V-9
ENERGY AND CHEMICAL REQUIREMENTS
ADVANCED WASTEWATER TREATMENT ALTERNATIVE TWO

	ELECTRICAL POWER		CHLORINE		LIME		METHANOL	NATURAL GAS	FUEL OIL	DIESEL FUEL
	Peak MW	Average MW	Maximum T/D	Average T/D	Maximum T/D	Average T/D	Average T/D	Average MCF/D*	Average 100 G/D	Average GAL/D
Port Huron	4.7	4.7	0.9	0.9	20	20	3.5	312	22.2	6
East China	9.8	4.9	16.5	5.5	94	31	2.1	1030	73.5	56
Macomb County	30.0	9.4	175.0	51.0	425	123	--	2036	145.2	70
Detroit	132.6	132.6	30.0	30.0	633	633	117.7	14,364	1054.8	601
Plymouth	12.0	3.8	28.0	8.1	160	46	--	975	69.6	30
Ypsilanti	12.0	3.8	28.0	8.1	160	46	--	975	69.6	30
Wyandotte	22.0	22.0	4.6	4.6	98	98	18.3	2871	204.9	144
Huron River	115.6	82.8	306.9	89.9	1013	510	58.4	9411	671.7	315
Monroe	7.4	7.4	1.5	1.5	36	36	4.0	838	59.2	30
Adrian-Tecumseh	3.1	2.6	2.1	1.0	20	13	2.1	95	6.6	7
Storm Collection & Storage	1868.5	43.4	--	--	--	--	--	--	--	1600
TOTAL	2217.7	317.4	593.5	200.6	2659	1556	206.1	35,778	2377.3	2889

* MCF = 1,000 Cubic Feet

TABLE V-10

MANPOWER REQUIREMENTS
ADVANCED WASTEWATER TREATMENT ALTERNATIVE TWO

	Superintendents & Supervisors	Foremen	Operators	Electricians	Maintenance Mechanics	Laboratory Technicians	Laborers	Other	Total Manpower
Port Huron	4	4	42	3	7	5	14	1	80
East China	4	7	64	5	9	7	26	5	127
Macomb Co.	6	24	115	12	19	9	60	8	253
Detroit	23	130	722	64	80	46	300	19	1384
Plymouth	4	10	51	7	9	1	27	5	114
Ypsilanti	4	10	51	7	9	1	27	5	114
Wyandotte	8	24	113	10	14	8	50	5	232
Huron River	21	109	550	52	74	39	250	21	1116
Monroe	5	9	50	4	9	6	20	3	106
Adrian - Techumseh	4	4	35	2	5	5	11	1	67
Lenewee Co. Fill	1	2	37	--	--	--	2	2	44
St. Clair Co. Fill	1	2	18	--	--	--	2	2	25
Storm Collection & Storage System	2	10	50	--	--	--	20	--	82
Total Manpower	87	345	1898	166	235	127	809	77	3744

INDEPENDENT PHYSICAL-CHEMICAL TREATMENT ALTERNATIVE ONE

This alternative proposes the use of independent physical-chemical treatment as the primary method of both municipal-industrial wastewater and stormwater treatment. It also emphasizes centralized treatment and minimum land use, and would abandon all existing regional plants in the area. The M&I treatment system, see Figure V-4, would consist of three IPCT treatment facilities and the interceptor network as shown. The major treatment facility would be located at the Huron River with two lesser plants located at East China and Adrian-Tecumseh. The stormwater control system would utilize the collection and storage system described in Scheme Two and the six plant IPCT treatment system described in the similarities section. It is shown in Figure V-2.

Sludge Handling and Disposal - The treatment plant locations, their design flows, and the sludge handling and disposal data for this alternative are presented in Table V-11. All sewage sludges resulting from treatment would be incinerated at the plant sites and the ash would be disposed of in landfills. Lime sludges would be recalcined at the plants to reclaim and reuse the lime and to reduce the waste material.

TABLE V-11

INDEPENDENT PHYSICAL-CHEMICAL TREATMENT ALTERNATIVE ONE

	DESIGN TREATMENT CAPACITY		COMBUSTION PROCESSES			ULTIMATE SOLIDS DISPOSAL	
	STORM RUNOFF (MGD)	MUNICIPAL-INDUSTRIAL (MGD)	SEWAGE SLUDGE INCINERATION (Ton/Day)	LIME SLUDGE RECALCINATION (Ton/Day)	ACT. CARBON REGENERATION (Ton/Day)	SANITARY LANDFILL (Ton/Day)	LAND APPLICATION (Ton/Day)
East China Plant	125 IPCT	36 IPCT	–	300	28	64	–
Macomb Co. Plant	600 IPCT	–	–	1226	75	72	–
Plymouth Plant	225 IPCT	–	–	600	28	31	–
Ypsilanti Plant	225 IPCT	–	–	600	28	31	–
Huron River Plant	1000 IPCT	1371 IPCT	–	6000	605	1362	–
Adrian-Tecumseh Plant	10.5 IPCT	12 IPCT	–	70	8	18	–

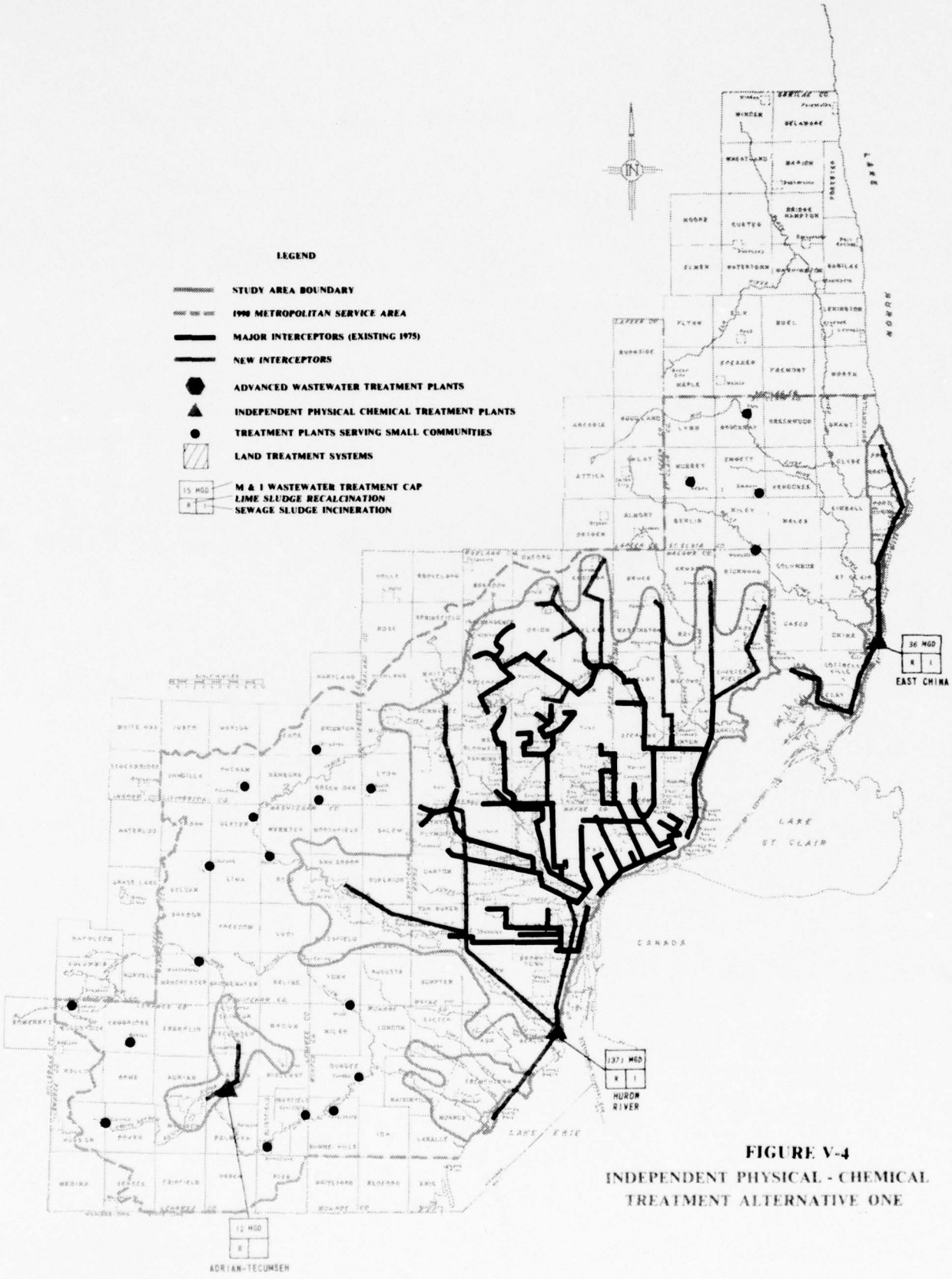

FIGURE V-4
INDEPENDENT PHYSICAL - CHEMICAL
TREATMENT ALTERNATIVE ONE

System Costs - Table V-12 presents a breakdown of costs for IPCT Alternative One. Detailed cost analysis of the components can be found in the tables of this appendix as specified below.

1. Combined Storm and M&I Plants - Tables B-8, B-20, and B-24.
2. Stormwater Treatment Plants - Tables B-26, B-26, and B-27.
3. Sludge Disposal Sites - Table F-3.
4. M&I Interceptors - Table IV-3 and IV-4 (Systems 3, 5, 9 & 10).
5. Stormwater Collection and Storage - Table IV-56

Resource Requirements - The land use requirements for this alternative are presented in Table V-13. The total land required to implement this alternative would be less than for any other of these eleven alternatives. As in most alternatives, the stormwater collection and storage system accounts for most of the land use requirement with the sludge disposal sites adding a lesser but still rather significant portion of the total requirement.

Energy and chemical demands are presented in Table V-14. The average electrical power required for IPCT alternatives would be less than that required for AWT alternatives since the aeration process is not a part of the IPCT method. Since incineration and recalcination would be used extensively, natural gas and fuel oil requirements would be large. Larger quantities of chlorine would be required in IPCT alternatives than in AWT alternatives because the break-point chlorination process would be used for treating M&I wastewater.

Manpower requirements are presented in Table V-15. The requirements are less than those presented in the AWT alternatives since IPCT facilities are more adaptable to mechanization and instrumentation.

TABLE V-12

SUMMARY COST SHEET

INDEPENDENT PHYSICAL-CHEMICAL TREATMENT ALTERNATIVE ONE

	Construction Cost Million Dollars	Amortized Construction Cost Million Dollars	Amortized Replacement Cost Million Dollars	Annual Operation and Maintenance Million Dollars	Total Annual Treatment Cost Million Dollars
COMBINED STORM & M&I PLANTS					
East China (IPCT)	72.0	4.070	.274	4.230	8.574
Huron River (IPCT)	911.2	53.816	4.225	83.039	127.656
Adrian-Tecumseh (IPCT)	13.7	.812	.096	.924	1.832
STORMWATER TREATMENT PLANTS					
Plymouth (IPCT)	73.8	4.361	.095	3.346	7.802
Ypsilanti (IPCT)	73.8	4.361	.095	3.346	7.802
Macomb County (IPCT)	181.5	10.725	.197	8.312	19.234
SLUDGE DISPOSAL SITES					
Lenawee County	11.6	.683	.098	1.815	2.596
St. Clair County	5.9	.347	.055	1.009	1.411
M&I INTERCEPTOR SYSTEMS					
St. Clair Co. System	20.8	1.230	--	.136	1.308
Detroit System	42.52	2.512	--	--	2.512
Huron River System	276.19	16.327		6.334	
Monroe to Huron River	15.22	.899	--	.194	
Adrian System	3.50	.207	--	.017	.224
STORM COLLECTION & STORAGE SYSTEM	2561.6	151.290	--	6.422	157.712
TOTAL SYSTEM COSTS	4263.37	251.634	5.135	119.124	357.894

TABLE V-13

LAND USE SUMMARY

IPCT - 1

Facility	Land (acres)	Land Use
East China Plant	80	Wastewater Treatment Plant
Macomb Co Plant	160	Stormwater Treatment PLANT
Plymouth Plant	85	Stormwater Treatment Plant
Ypsilanti Plant	85	Stormwater Treatment Plant
Huron R. Plant	540	Wastewater Treatment Plant
Adrian-Tecumseh Plant	20	Wastewater Treatment Plant
St Clair Co Landfill	1,108	Landfill of Dewatered Chemical Sludge, Waste Lime Ash and Storm Solids
Lenewee Co Landfill	2,323	Same as Above
Storm Collection & Storage System	23,500	Underground and Surface Storage Facilities for Urban Storm Runoff
TOTAL	27,901	

TABLE V-14
ENERGY AND CHEMICAL REQUIREMENTS
INDEPENDENT PHYSICAL-CHEMICAL TREATMENT ALTERNATIVE ONE

	ELECTRICAL POWER		CHLORINE		LIME		METHANOL	NATURAL GAS	FUEL OIL	DIESEL FUEL
	Peak MW	Average MW	Maximum T/D	Average T/D	Maximum T/D	Average T/D	Average T/D	Average MCF/D*	Average 100 G/D	Average GAL/D
Stormwater Collection & Storage System	1,868.5	43.4	--	--	--	--	--	--	--	1600
East China	4.6	4.6	53.2	23.2	121	38	--	780	55.6	44
Macomb Co.	9.4	9.4	175.0	51.0	425	123	--	2036	145.2	44
Plymouth	12.0	3.8	28.0	8.1	160	46	--	975	69.5	33
Ypsilanti	12.0	3.8	28.0	8.1	160	46	--	975	69.5	33
Huron River	114.2	81.4	1711.0	794.0	1958	1205	--	26,471	1887.8	964
Adrian-Tecumseh	1.3	1.1	14.6	7.3	33	22	--	145	10.3	11
Conveyance to E. China	.3	.2	--	--	--	--	--	--	--	--
Conveyance to Huron River	69.6	46.4	--	--	--	--	--	--	--	--
TOTAL	2091.9	194.1	2009.8	891.7	2857	1480	--	30,758	2238.0	2729

* MCF = 1,000 Cubic Feet

TABLE V-15
MANPOWER REQUIREMENTS
INDEPENDENT PHYSICAL-CHEMICAL TREATMENT ALTERNATIVE ONE

	Superintendents & Supervisors	Foremen	Operators	Electricians	Maintenance Mechanics	Laboratory Technicians	Laborers	Other	Total Manpower
East China	5	10	56	7	10	5	29	6	128
Macomb Co.	6	24	115	12	19	9	60	8	253
Plymouth	4	10	51	7	9	1	27	5	114
Ypsilanti	4	10	51	7	9	1	27	5	114
Huron River	15	130	646	77	126	50	360	27	1431
Adrian - Tecumseh	1	1	17	1	4	2	7	1	34
St. Clair Co. Fill	1	2	16	--	--		1	1	21
Lenewee Co. Fill	1	3	34	--	--		2	1	41
Storm Collection & Storage System	2	10	50	--	--		20	--	82
Total Manpower	39	200	1036	111	177	68	533	54	2218

INDEPENDENT PHYSICAL-CHEMICAL TREATMENT ALTERNATIVE TWO

This alternative proposes the use of independent physical-chemical treatment as the primary method of both municipal-industrial and stormwater treatment. The alternative attempts to maximize the use of major existing treatment facilities in a regional IPCT system. These existing plants, located at Port Huron, Detroit, Wyandotte, and Monroe would involve the conversion of existing facilities to the IPCT process as explained in Chapter 4. Three additional IPCT plants would be constructed for treatment of M&I wastewater. They would be located at East China, the Huron River, and Adrian-Tecumseh and would be totally new facilities. This system is shown in Figure V-5.

The stormwater control system, shown in Figure V-2, is the same treatment, collection and storage system proposed for the majority of these alternatives.

Sludge Handling and Disposal - Table V-16 identifies the treatment plant sites, their design flows, and the sludge handling and disposal methods proposed for this alternative. All sewage sludges, except at

TABLE V-16

INDEPENDENT PHYSICAL-CHEMICAL TREATMENT ALTERNATIVE TWO

	DESIGN TREATMENT CAPACITY		COMBUSTION PROCESSES			ULTIMATE SOLIDS DISPOSAL	
	STORM RUNOFF (MGD)	MUNICIPAL-INDUSTRIAL (MGD)	SEWAGE SLUDGE INCINERATION (Ton/Day)	LIME SLUDGE RECALCINATION (Ton/Day)	ACT. CARBON REGENERATION (Ton/Day)	SANITARY LANDFILL (Ton/Day)	LAND APPLICATION (Ton/Day)
Port Huron Plant	–	24 IPCT	–	72	9	27	–
East China Plant	125 IPCT	12 IPCT	–	225	20	73	–
Macomb Co. Plant	600 IPCT	–	–	1226	75	72	–
Detroit Plant	–	806 IPCT	–	2400	282	560	–
Wyandotte Plant	–	125 IPCT	–	375	44	87	–
Plymouth Plant	225 IPCT	–	–	600	28	31	–
Ypsilanti Plant	225 IPCT	–	–	600	28	31	–
Huron River Plant	1000 IPCT	400 IPCT	–	2500	265	692	–
Monroe Plant	–	40	–	110	14	40	–
Adrian-Tecumseh Plant	10.5 IPCT	12 IPCT	–	–	8	40	–

Adrian-Tecumseh, would be incinerated at the plant sites with the waste ash being disposed of by landfill. Lime sludge would be recalcined at the plants to reclaim the lime and reduce the waste material. These

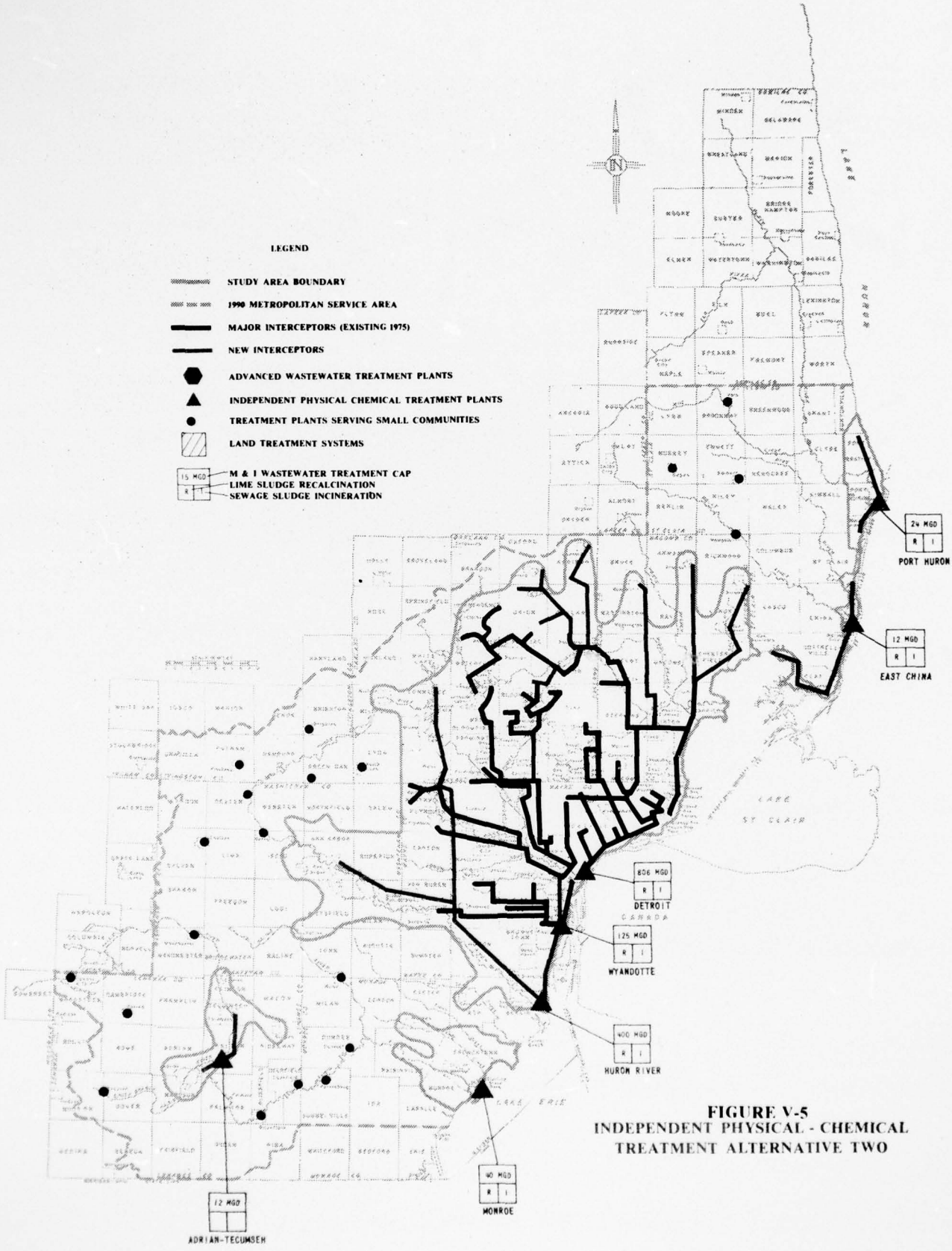

FIGURE V-5
INDEPENDENT PHYSICAL - CHEMICAL
TREATMENT ALTERNATIVE TWO

facilities would not be justifiable at Adrian-Tecumseh because of energy savings, availability of disposal sites, and economic advantages of other methods of disposal.

System Costs - A breakdown of costs for IPCT Alternative Two is presented in Table V-17. Detailed cost analyses of the components can be found in various tables throughout this appendix as specified below.

1. Municipal-Industrial Plants - Tables B-12, B-14, B-22 and B-10.
2. Stormwater Plants - Tables B-26, B-26, and B-27.
3. Storm and M&I Plants - Tables B-16, B-6, and B-23.
4. M&I Interceptors - Table IV-3 and IV-4 (Systems 1, 4 & 8).
5. Stormwater Collection and Storage - Table IV-56.
6. Sludge Landfill - Table F-4.

Resource Requirements - The land use requirements for this alternative are presented for each facility or system in Table V-18. As is normally the case, the stormwater control and landfill facilities require the largest amount of land. The figures shown at the four locations where the facilities would be up-graded are in addition to the existing site.

Energy and chemical requirements are presented in Table V-19. Although there are more plants in this alternative than there are in IPCT Alternative One, the average power requirements are less for IPCT Alternative Two. This is due to the energy required by the conveyance system which would transport wastewater to the large Huron River plant in the IPCT Alternative One. Fuel oil and natural gas requirements would again be large because of the extensive utilization of incineration and recalcination.

Table V-20 presents the manpower requirements for this alternative. The estimate has been broken down into various labor categories for the individual facilities.

TABLE V-17

SUMMARY COST SHEET

INDEPENDENT PHYSICAL-CHEMICAL TREATMENT ALTERNATIVE TWO

	Construction Cost Million Dollars	Amortized Construction Cost Million Dollars	Amortized Replacement Cost Million Dollars	Annual Operation and Maintenance Million Dollars	Total Annual Treatment Cost Million Dollars
M&I PLANTS					
Monroe (IPCT)	21.58	1.276	.157	2.315	3.748
Wyandotte (IPCT)	50.80	3.000	.450	6.733	10.183
Detroit (IPCT)	270.00	15.947	2.196	38.524	56.667
Port Huron (IPCT)	10.93	.642	.137	1.466	2.245
STORMWATER PLANTS					
Ypsilanti (IPCT)	73.8	4.361	.095	3.346	7.802
Plymouth (IPCT)	73.8	4.361	.095	3.346	7.802
Macomb Co. (IPCT)	181.5	10.725	.197	8.312	19.234
STORM & M&I PLANTS					
Huron River (IPCT)	493.3	29.137	1.835	35.059	66.031
East China (IPCT)	57.73	3.412	.207	2.992	6.611
Adrian - Tecumseh (IPCT)	11.3	.671	.036	.839	1.546
M&I INTERCEPTORS					
St. Clair Co. System	11.27	.665	--	.104	.769
Detroit System	42.52	2.512	--	--	2.512
Huron River System	157.55	9.305	--	.741	10.046
Adrian System	3.50	.207	--	.017	.224
STORMWATER COLLECTION & STORAGE SYSTEM	2561.62	151.290	--	6.422	157.712
SLUDGE LANDFILL					
St. Clair Co. Site	6.41	.377	.077	1.129	1.583
Lenawee Co. Site	12.49	.737	.128	2.114	2.979
TOTAL SYSTEM COSTS	4040.10	238.625	5.610	113.459	357.694

TABLE V-18

LAND USE SUMMARY

IPCT - 2

Facility	Land (acres)	Land Use
Port Huron Plant	No Additional Land	Wastewater Treatment Plant
East China Plant	75	Wastewater Treatment Plant
Macomb Co Plant	160	Stormwater Treatment Plant
Detroit Plant	100*	Wastewater Treatment Plant
Wyandotte Plant	10*	Wastewater Treatment Plant
Plymouth Plant	85	Stormwater Treatment Plant
Ypsilanti Plant	85	Stormwater Treatment Plant
Huron R. Plant	350	Wastewater Treatment Plant
Monroe Plant	12*	Wastewater Treatment Plant
Adrian-Tecumseh Plant	20	Wastewater Treatment Plant
St. Clair Co Landfill	1,142	Landfill of Chemical and Sewage Sludges, Waste Lime Ash and Storm Solids
Lenewee Co Landfill	2,386	Same as Above
Storm Collection & Storage System	23,500	Underground and Surface Storage Facilities for Urban Storm Runoff
TOTAL	27,925	

*In addition to existing plant site

TABLE V-19

ENERGY AND CHEMICAL REQUIREMENTS
INDEPENDENT PHYSICAL-CHEMICAL TREATMENT ALTERNATIVE TWO

	ELECTRICAL POWER		CHLORINE		LIME		METHANOL	NATURAL GAS	FUEL OIL	DIESEL FUEL
	Peak MW	Average MW	Maximum T/D	Average T/D	Maximum T/D	Average T/D	Average T/D	Average MCF/D*	Average 100 G/D	Average GAL/D
Port Huron	1.6	1.6	24.8	12.4	22	18	--	175	11.9	18
East China	7.9	3.1	28.4	10.8	115	39	--	182	12.4	36
Macomb Co.	30.0	9.4	175.0	51.0	425	123	--	2036	145.2	36
Detroit	40.3	40.3	834.0	417.0	735	588	--	13,800	984.2	571
Ypsilanti	12.0	3.8	28.0	8.1	160	46	--	975	69.6	30
Plymouth	12.0	3.8	28.0	8.1	160	46	--	975	69.6	30
Huron River	69.2	36.4	706.0	292.0	1072	496	--	9971	711.8	483
Monroe	3.1	3.1	41.4	20.7	36	29	--	260	18.6	40
Adrian-Tecumseh	1.3	1.1	14.6	7.3	33	22	--	41	2.9	66
Wyandotte	7.4	7.4	129.4	64.7	114	91	--	2200	157.0	81
Storm Collection & Storage System	1868.5	43.4	--	--	--	--	--	--	--	1600
TOTAL	2053.3	153.4	2009.6	892.1	2872	1498	--	30,615	2183.2	2991

* MCF = 1,000 Cubic Feet

TABLE V-20
MANPOWER REQUIREMENTS
INDEPENDENT PHYSICAL-CHEMICAL TREATMENT ALTERNATIVE TWO

	Superintendents & Supervisors	Foremen	Operators	Electricians	Maintenance Mechanics	Laboratory Technicians	Laborers	Other	Total Manpower
Port Huron	1	1	17	1	4	2	8	1	35
East China	4	7	49	5	8	5	24	5	107
Macomb Co.	6	24	115	12	19	9	60	8	253
Detroit	9	52	270	35	48	20	155	13	602
Wyandotte	4	11	47	7	10	4	25	4	112
Plymouth	4	10	51	7	9	1	27	5	114
Ypsilanti	4	10	51	7	9	1	27	5	114
Huron River	13	68	331	39	56	25	175	19	726
Monroe	2	4	21	3	5	2	10	3	50
Adrian - Tecumseh	1	1	17	1	4	2	7	1	34
St. Clair Co. Landfill	1	2	15	--	--	--	1	1	20
Lenewee Co. Landfill	1	3	37	--	--	--	2	1	44
Storm Collection & Storage System	2	10	50	--	--	--	20	--	82
Total Manpower	52	203	1071	117	172	71	541	66	2293

INDEPENDENT PHYSICAL-CHEMICAL TREATMENT ALTERNATIVE THREE

This alternative is identical to IPCT Alternative Two with the exception of the methods proposed for sewage sludge handling. The municipal-industrial system, as presented in Figure V-6, would utilize seven IPCT treatment facilities and the interceptor system shown. The four plants located at Port Huron, Detroit, Wyandotte, and Monroe, would be converted existing facilities. The remaining three would be totally new plants. The stormwater control system is the same as that used for the other IPCT alternatives and is shown in Figure V-2.

Sludge Handling and Disposal - Table V-21 identifies the treatment plant sites, their design flows, and the sludge handling and disposal methods proposed in this alternative. Sewage and lime sludges in all plants would be dewatered on vacuum filters or in centrifuges and hauled to sanitary landfills for disposal.

TABLE V-21

INDEPENDENT PHYSICAL-CHEMICAL TREATMENT ALTERNATIVE THREE

	DESIGN TREATMENT CAPACITY		COMBUSTION PROCESSES			ULTIMATE SOLIDS DISPOSAL	
	STORM RUNOFF (MGD)	MUNICIPAL-INDUSTRIAL (MGD)	SEWAGE SLUDGE INCINERATION (Ton/Day)	LIME SLUDGE RECALCINATION (Ton/Day)	ACT. CARBON REGENERATION (Ton/Day)	SANITARY LANDFILL (Ton/Day)	LAND APPLICATION (Ton/Day)
Port Huron Plant	–	24 IPCT	–	–	8	72	–
East China Plant	125 IPCT	12 IPCT	–	–	20	136	–
Macomb Co. Plant	600 IPCT	–	–	–	75	356	–
Detroit Plant	–	806 IPCT	–	–	282	2400	–
Wyandotte Plant	–	125 IPCT	–	–	44	375	–
Plymouth Plant	225 IPCT	–	–	–	28	174	–
Ypsilanti Plant	225 IPCT	–	–	–	28	174	–
Huron River Plant	1000 IPCT	400 IPCT	–	–	265	1792	–
Monroe Plant	–	40 IPCT	–	–	14	106	–
Adrian-Tecumseh Plant	10.5 IPCT	12 IPCT	–	–	8	40	–

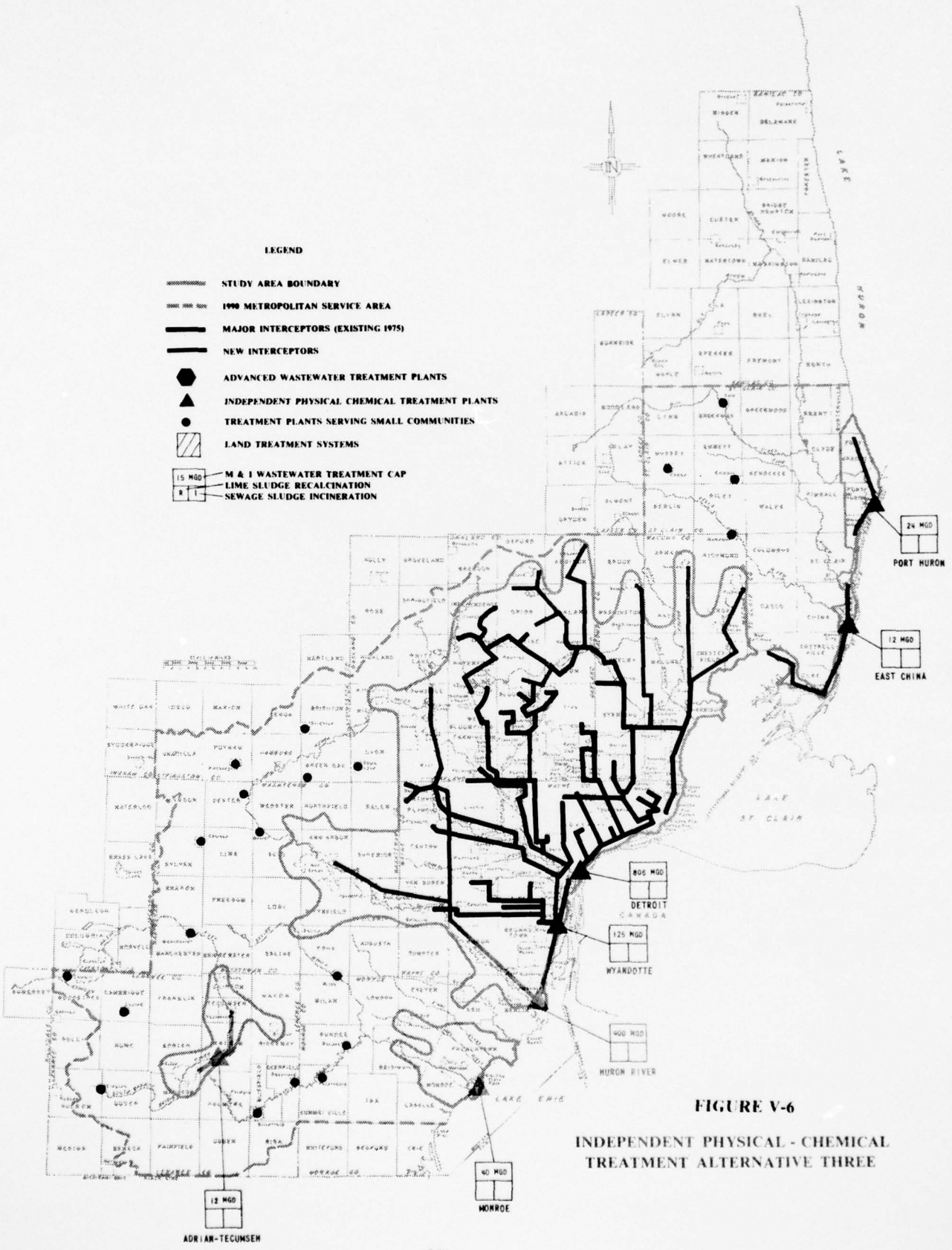

FIGURE V-6

INDEPENDENT PHYSICAL - CHEMICAL
TREATMENT ALTERNATIVE THREE

System Costs - The cost breakdown for IPCT Alternative Three is presented in Table V-22. More detailed cost analyses of the components listed in this table can be found in other tables of this appendix as specified below.

1. Municipal-Industrial Plants - Tables B-11, B-13, B-21, B-9.
2. Stormwater Plants - Table B-25, B-25, B-28.
3. Storm and M&I Plants - Tables B-14, B-5, B-23.
4. M&I Major Interceptors - Table IV-3 and IV-4 (Systems 1, 4 & 8).
5. Stormwater Collection and Storage - Table IV-56.
6. Landfill Sites - Table F-5.

Resource Requirements - The land use requirements for this alternative are shown in Table V-23. As in the other IPCT alternatives, the stormwater collection and storage system would make the greatest land use demands. The amount of land required for sludge disposal would be significantly increased over IPCT Alternative Two due to the elimination of sludge incineration and recalcination.

Energy and chemical requirements, as shown in Table V-24, are similar to IPCT Alternative Two with the exception of the fuel oil, diesel fuel, and natural gas categories. This difference is again due to the lack of sludge incineration and recalcination facilities proposed for this Alternative. The natural gas and fuel oil requirements would be reduced since no fuel would be required for recalcination or sludge combustion. Diesel fuel requirements would increase because larger sludge volumes would mean more trips to the landfill sites.

The manpower requirements presented in Table V-25 are similar to those presented for IPCT Alternative Two.

TABLE V-22

SUMMARY COST SHEET

INDEPENDENT PHYSICAL-CHEMICAL TREATMENT ALTERNATIVE THREE

	Construction Cost Million Dollars	Amortized Construction Cost Million Dollars	Amortized Replacement Cost Million Dollars	Annual Operation and Maintenance Million Dollars	Total Annual Treatment Cost Million Dollars
M&I PLANTS					
Monroe (IPCT)	18.59	1.099	.068	2.131	3.298
Wyandotte (IPCT)	40.20	2.374	.169	6.192	8.735
Detroit (IPCT)	246.00	14.526	.994	35.436	50.956
Port Huron (IPCT)	9.18	.542	.047	1.331	1.920
STORMWATER PLANTS					
Ypsilanti (IPCT)	71.5	4.225	.067	2.808	7.100
Plymouth (IPCT)	71.5	4.225	.067	2.808	7.100
Macomb County (IPCT)	177.7	10.501	.152	7.252	17.905
STORM & M&I PLANTS					
Huron River (IPCT)	454.60	26.849	.811	30.778	58.438
East China (IPCT)	52.79	3.121	.077	2.834	6.032
Adrian - Tecumseh (IPCT)	11.3	.671	.036	.839	1.546
M&I MAJOR INTERCEPTORS					
St. Clair Co. System	11.27	.665	--	.104	.769
Detroit System	42.52	2.512	--	--	2.512
Huron River System	157.55	9.305	--	.741	10.046
Adrian System	3.50	.207	--	.017	.224
STORMWATER COLLECTION & STORAGE SYSTEM	2561.62	151.290	--	6.422	157.712
SLUDGE LANDFILL					
St. Clair Co. Site	12.15	.717	.128	1.584	2.429
Lenawee Co. Site	45.73	2.700	.401	6.776	9.877
TOTAL SYSTEM COSTS	3987.70	235.529	3.017	108.053	346.599

TABLE V-23

LAND USE SUMMARY

IPCT - 3

Facility	Land (acres)	Land Use
Port Huron Plant	0*	Wastewater Treatment Plant
East China Plant	75	Wastewater Treatment Plant
Macomb Co Plant	160	Stormwater Treatment Plant
Detroit Plant	100*	Wastewater Treatment Plant
Wyandotte Plant	10*	Wastewater Treatment Plant
Plymouth Plant	85	Stormwater Treatment Plant
Ypsilanti Plant	85	Stormwater Treatment Plant
Huron R. Plant	350	Wastewater Treatment Plant
Monroe Plant	12*	Wastewater Treatment Plant
Adrian-Tecumseh Plant	20	Wastewater Treatment Plant
St. Clair Co Landfill	2,368	Landfill of Dewatered Chemical and Sewage Sludges and Storm Solids
Lenewee Co Landfill	13,423	Same as Above
Storm Collection & Storage System	23,500	Underground and Surface Storage Facilities for Urban Storm Runoff
TOTAL	40,188	

*In addition to existing plant site

TABLE V-24
ENERGY AND CHEMICAL REQUIREMENTS
INDEPENDENT PHYSICAL-CHEMICAL TREATMENT ALTERNATIVE THREE

	ELECTRICAL POWER		CHLORINE		LIME		METHANOL	NATURAL GAS	FUEL OIL	DIESEL OIL
	Peak MW	Average MW	Maximum T/D	Average T/D	Maximum T/D	Average T/D	Average T/D	Average MCF/D*	Average 100 G/D	Average GAL/D
East China	7.1	2.8	24.8	12.4	122	48	--	78	5.6	144
Port Huron	1.5	1.5	24.8	10.8	35	35	--	75	5.4	171
Macomb Co.	27.4	8.6	175.0	51.0	500	145	--	194	13.8	465
Monroe	2.9	2.9	41.4	20.7	58	58	--	125	8.9	420
Wyandotte	6.6	6.6	129.4	64.7	182	182	--	389	27.7	838
Detroit	35.2	35.2	834.0	417.0	1176	1176	--	2511	178.9	6336
Huron River	62.3	32.6	706.0	292.0	1418	826	--	1569	111.8	3021
Ypsilanti	10.7	3.4	28.0	8.1	267	134	--	73	5.2	252
Plymouth	10.7	3.4	28.0	8.1	267	134	--	73	5.2	252
Adrian-Tecumseh	1.2	1.0	14.6	7.3	33	22	--	41	2.9	66
Storm Collection & Storage System	1868.5	43.4	--	--	--	--	--	--	--	1600
TOTAL	2034.0	141.4	2009.6	892.1	4058	2760	--	5128	365.3	13,565

* MCF = 1,000 Cubic Feet

TABLE V-25
MANPOWER REQUIREMENTS
INDEPENDENT PHYSICAL-CHEMICAL TREATMENT ALTERNATIVE THREE

	Superintendents & Supervisors	Foremen	Operators	Electricians	Maintenance Mechanics	Laboratory Technicians	Laborers	Other	Total Manpower
Port Huron	1	1	15	1	4	2	7	1	32
East China	4	7	44	5	9	5	26	5	105
Macomb Co.	6	22	105	12	21	9	64	8	247
Detroit	9	50	260	33	48	20	160	13	593
Wyandotte	4	11	44	7	10	4	26	4	110
Plymouth	4	9	48	7	9	1	28	5	111
Ypsilanti	4	9	48	7	9	1	28	5	111
Huron River	13	65	315	37	56	25	175	19	705
Monroe	2	4	19	3	5	2	10	3	48
Adrian - Tecumseh	1	1	16	1	4	2	7	1	33
St. Clair Co. Landfill	1	2	28	--	--	--	2	2	35
Lenawee Co. Landfill	1	4	206	--	--	--	10	3	224
Storm Collection & Storage System	2	10	50	--	--	--	20	--	82
Total Manpower	52	195	1198	113	175	71	563	69	2436

LAND IRRIGATION TREATMENT ALTERNATIVE ONE

This alternative proposes the use of treatment lagoons and land irrigation for the treatment of all wastewater in Southeastern Michigan. The objective of the land irrigation treatment alternatives to to utilize wastewater and the nutrients contained therein to enhance crop production and simultaneously meet the prescribed effluent quality standard. The municipal-industrial wastewater system, shown in Figure V-7, would use the expanded interceptor system to convey the wastewater to lagoon treatment sites in St. Clair, Monroe, and Lenawee Counties. After receiving the equivalent of secondary treatment, the water would be conveyed to adjacent land irrigation sites, additional irrigation sites in Huron and Tuscola Counties, or to storage facilities which contain the wastewater during periods of low or zero irrigation.

Urban storm runoff and combined sewer overflows would be collected in a separate collection and storage system, Scheme One, and conveyed to storage sites or to the major conveyance system along the Detroit River and Lake St. Clair shoreline. This major conveyance system, see Figure V-8, has been designed to transport the stormwater to two large storage reservoirs located in Macomb and Monroe Counties. From here the water would be conveyed in the same system which transports the municipal-industrial flows to the lagoon treatment facilities.

Return facilities have also been included in this and the other alternatives which incorporate land treatment to convey the treated wastewater which would be collected in underdrains to ultimate discharge points where they will have no detrimental effects on the receiving waters. These facilities have been designed as gravity flow interceptors, force mains, and hard rock tunnels. Interceptors and tunnels were used wherever possible to make use of existing hydraulic head and eliminate the need for pumping stations.

Sludge Handling and Disposal - Table V-26 presents the treatment locations, the design flows, and the sludge handling methods for Land Alternative One. All sludges which settle out at treatment lagoons would be applied to the land for treatment and disposal. The sludge applied in this manner also acts as a soil conditioner to increase

AD-A041 115 SOUTHEASTERN MICHIGAN WASTEWATER MANAGEMENT SURVEY SCOPE STUDY DESIGN AND COST APPENDIX(U) CORPS OF ENGINEERS DETROIT MICH DDTROIT DISTRICT MAY 74 4/6

UNCLASSIFIED F/G 13/2 NL

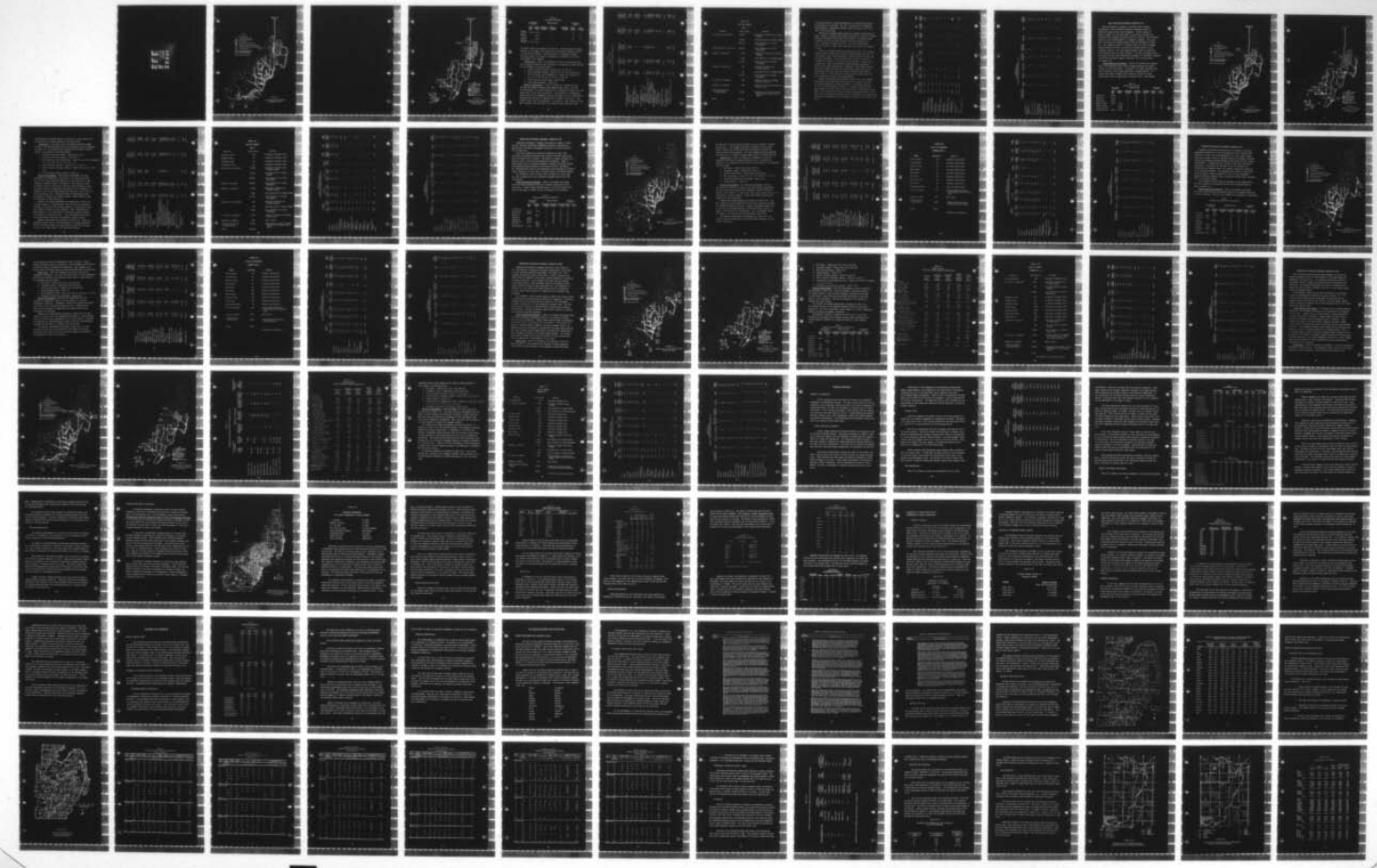

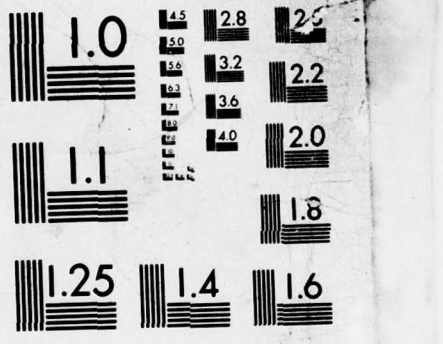
1.0
1.1
1.25
1.4
1.6
2.8
3.2
3.6
4.0
2.2
2.0
1.8

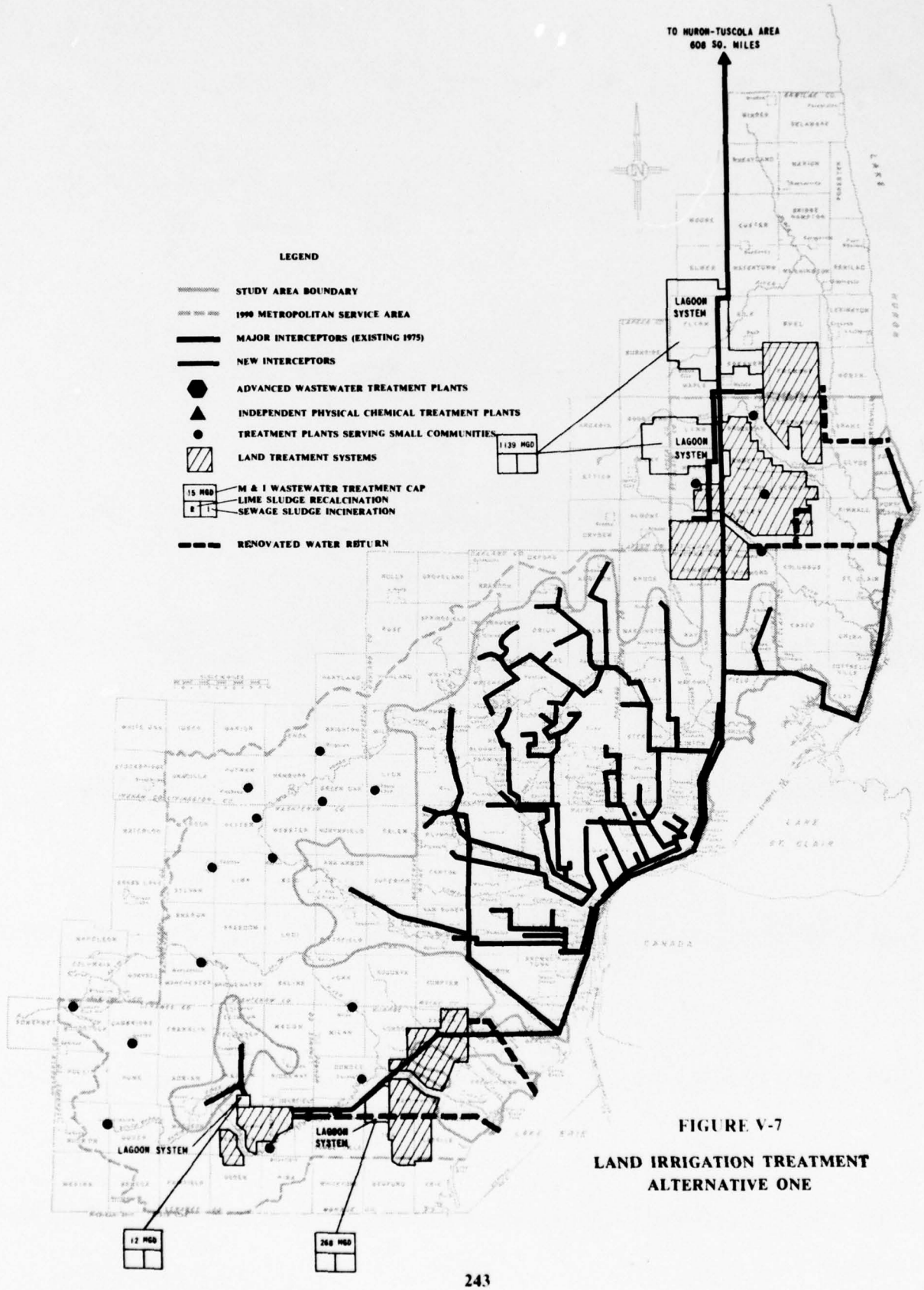

FIGURE V-7

LAND IRRIGATION TREATMENT
ALTERNATIVE ONE

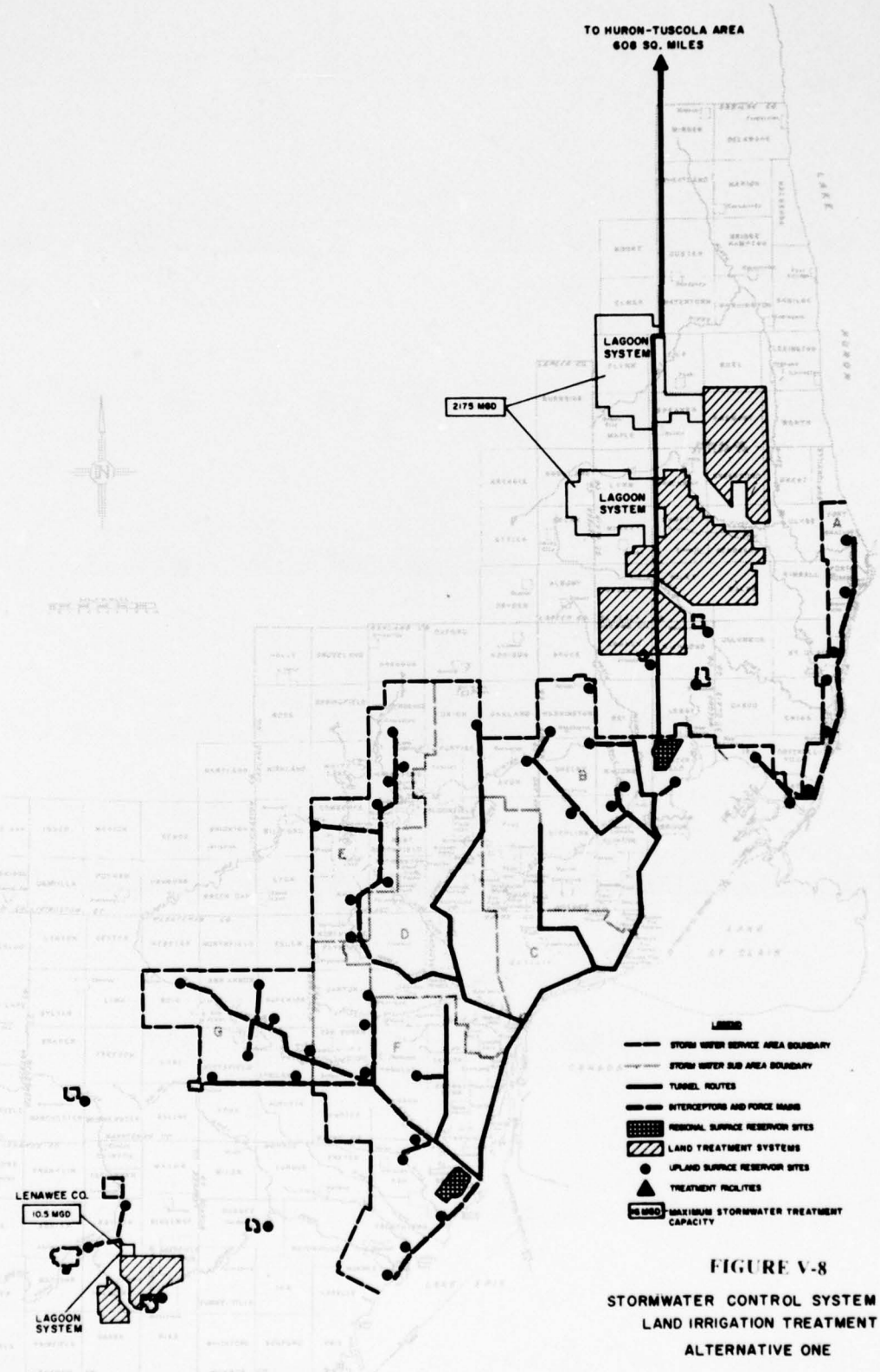

FIGURE V-8

STORMWATER CONTROL SYSTEM FOR LAND IRRIGATION TREATMENT ALTERNATIVE ONE

TABLE V-26

LAND IRRIGATION ALTERNATIVE ONE

	DESIGN TREATMENT CAPACITY		COMBUSTION PROCESSES			ULTIMATE SOLIDS DISPOSAL	
	STORM RUNOFF (MGD)	MUNICIPAL INDUSTRIAL (MGD)	SEWAGE SLUDGE INCINERATION (TON/DAY)	LIME SLUDGE RECALCINATION (TON/DAY)	ACT.CARBON REGENERATION (TON/DAY)	SANITARY LANDFILL (TON/DAY)	LAND APPLICATION (TON/DAY)
Lenawee Co. Land Site	10.5 Land	79 Land	-	-	-	2.2	10
Monroe Co. Land Site		201 Land	-	-	-	50	214
St. Clair Co. Land Site		681 Land	-	-	-	210	904
Huron-Tuscola Land Site	2175 Land	458 Land	-	-	-		

the humus content and fertility of the soil. The land would be located adjacent to the lagoon site and would be controlled to minimize runoff or infiltration problems. Solids deposited in stormwater storage facilities would, as in other alternatives, be removed in a dry form and disposed of by landfill.

System Costs - Table V-27 presents the costs for Land Alternative One. Detailed design and cost information is presented in other portions of this appendix as specified below.

1. Lagoon Treatment Systems - Tables C-1, C-5 and C-7.
2. Land Irrigation Systems - Tables IV-54, IV-55, IV-56 and D-1.
3. M&I Interception and Transmission - Tables IV-3 (Systems 13, 18, 24, 27, 28, 31, 35, 38, 40, 41, 46 and 47).
4. Storm Collection and Storage - Table IV-55.
5. Storm Sludge Disposal - Table F-6.

Resource Requirements - Land is required for irrigation sites, storage and treatment lagoons, and sludge disposal areas. The land use requirements for Land Alternative One as presented in Table V-28, are larger than for any other alternative. The creation of an irrigation system which would accommodate the total wastewater flow of Southeastern Michigan being applied for approximately 35 weeks of the year, is the largest single land use requirement. The amount of land required is such that treatment sites have had to be located in more than one county.

TABLE V-27

SUMMARY COST SHEET

LAND IRRIGATION TREATMENT ALTERNATIVE ONE

	Construction Cost Million Dollars	Amortized Construction Cost Million Dollars	Amortized Replacement Cost Million Dollars	Annual Operation and Maintenance Million Dollars	Total Annual Treatment Cost Million Dollars
LAGOON & SLUDGE DISPOSAL SYSTEMS					
St. Clair & Sanilac County	$ 500.1	29.536	4.194	42.508	76.238
Monroe County	82.3	4.858	.400	4.128	9.386
Lenawee County	13.4	.790	.026	.358	1.174
LAND IRRIGATION STYSTEMS					
St. Clair - Sanilac County	328.2	19.385	-	14.215	33.600
Huron-Tuscola County	881.4	52.059	-	30.895	82.954
Monroe County	122.6	7.241	-	4.296	11.537
Lenawee County	46.2	2.729	-	1.721	4.450
SPECIAL TRANSMISSION LINES					
N. Equalization to St. Clair Lagoon System	275.1	16.248	1.382	24.204	41.834
St. Clair Lagoons to Huron-Tuscola Sites	617.8	38.850	3.552	17.685	60.087
S. Equalization to Monroe Co Lagoon Sys.	39.1	2,311	.095	1.813	4.219
Service to Lenawee Co. Site	24.3	1.435	.068	.366	1.869
Monroe-Lenawee Co. Return System	74.0	4.371	-	.057	4.428
St. Clair-Sanilac Co. Return System	126.7	7.485	.153	.588	8.226
Monroe City to S. Equalization	15.2	.899	.054	.140	1.093
MAJOR INTERCEPTORS REQUIRED					
St. Clair Co. System	75.2	4.445	-	.390	4.835
Detroit System	42.5	2.512	-	-	2.512
Huron River System	142.1	8.395	-	.741	9.136
Lenawee Co System	3.5	.207	-	.071	.278
STORM COLLECTION AND STORAGE System	2541.5	150.10[illegible]	-	7.142	157.247
STORM SLUDGE DISPOSAL SYSTEM					
Lenawee Co. Fill Site	4.6	.273	.065	1.000	1.338
St. Clair Co. Fill Site	4.7	.277	.067	.996	1.340
Distribution-St Clair-Sanilac Co Site	67.3	3.977	.332	1.705	6.014
	6,027.8	358.388	10.388	155.019	523.795

TABLE V-28

LAND USE SUMMARY

LAND - 1

Facility	Land (acres)	Land Use
St. Clair Co. Land Site	64,508	Wastewater Treatment and Storage Lagoons
	33,300	Land Application of Sewage Sludge
	149,220	Land Irrigation of Treated Wastewater
Huron-Tuscola Co. Land Site	388,970	Land Irrigation of Treated Wastewater
Monroe Co. Land Site	6,628	Wastewater Treatment and Storage Lagoons
	7,826	Land Application of Sewage Sludge
	41,040	Land Irrigation of Treated Wastewater
Lenawee Co. Land Site	465	Wastewater Treatment and Storage Lagoons
	350	Land Application of Sewage Sludge
	18,300	Land Irrigation of Treated Wastewater
St. Clair Co. Landfill	980	Landfill of Grit, Screenings and Storm Solids
Lenawee Co. Landfill	980	Landfill of Grit, Screenings and Storm Solids
Storm Collection and Storage System	23,500	Underground and Surface Storage Facilities for Urban Storm Runoff
TOTAL	736,067	

In this alternative it has been assumed that the required land would be acquired by fee purchase. The cost of acquisition of irrigation land represents a significant portion, about one third, of the total cost of this alternative.

Storage and treatment lagoons would also require a large amount of land. Storage of treated water would be required for 155 days to prevent having to discharge effluent prior to irrigation. This period would be during winter months when irrigation operations would have to cease. Stormwater storage facilities, as in other alternatives, would be required to reduce peak flows and would require large amounts of land.

Chemical and energy demands are presented in Table V-29. Chemical demands would be minimal since chlorine for disinfection would be the only chemical used. Power requirements, however, would be larger than any other alternative. Because large tracts of land are required, irrigation sites had to be located at great distances from the metropolitan area. These long distances increase pumping requirements which in turn would increase power consumption. Peak pumping requirements for stormwater systems also create power demands that would be significant since pumps have been sized to evacuate tunnels during major storms. In this alternative, power facilities might have to be built specifically to meet these power demands.

Manpower requirements are presented in Table V-30. The manpower estimate has been broken down into various labor categories but does not include manpower for farming operations. For planning purposes, the cost of farm operations, exclusive of irrigation operation, has been assumed to be about equal to the field value of farm products being grown. All farm operation would be contracted including disposal of the crops and the resulting sale would provide for payment of these operations. Estimates for maintenance of the irrigation facilities are included in the table.

TABLE V-29
ENERGY AND CHEMICAL REQUIREMENTS
LAND IRRIGATION TREATMENT ALTERNATIVE ONE

	ELECTRICAL POWER		CHLORINE		LIME		METHANOL	NATURAL GAS	FUEL OIL	DIESEL FUEL
	Peak MW	Average MW	Maximum T/D	Average T/D	Maximum T/D	Average T/D	Average T/D	Average MCF/D*	Average 100 G/D	Average GAL/D
St. Clair County Lagoon System	291.5	242.9	124.6	101.1	--	--	--	--	--	1810
St. Clair County Irrigation & Drainage	177.6	88.8	--	--	--	--	--	--	--	--
Huron-Tuscola Counties Irrigation & Drainage	479.4	139.7	--	--	--	--	--	--	--	--
Monroe County Lagoon System	27.1	22.6	23.3	15.5	--	--	--	--	--	510
Monroe County Irrigation & Drainage	53.0	26.5	--	--	--	--	--	--	--	--
Lenawee County Lagoon System	2.2	1.8	1.0	0.6	--	--	--	--	--	--
Lenawee County Irrigation & Drainage	20.6	10.3	--	--	--	--	--	--	--	--
Storm Collection & Storage System	1868.5	43.4	--	--	--	--	--	--	--	1600
Major Conveyance Systems	1177.8	465.5	--	--	--	--	--	--	--	--
TOTAL	4097.7	1141.5	148.9	117.2	--	--	--	--	--	3920

* MCF = 1,000 Cubic Feet

TABLE V-30
MANPOWER REQUIREMENTS
LAND IRRIGATION TREATMENT ALTERNATIVE ONE

	Superintendents & Supervisors	Foremen	Operators	Electricians	Maintenance Mechanics	Laboratory Technicians	Laborers	Other	Total Manpower
St. Clair Sanilac Co. Land Site	6	23	76	23	23	11	82	1	245
Huron-Tuscola Co. Land Site	15	60	193	59	59	24	210	5	625
Monroe Co. Land Site	2	6	21	6	6	3	22	1	67
Lenawee Co. Land Site	1	3	9	3	3	1	10	--	30
Storm Collection & Storage System	2	10	50	--	--	--	20	--	82
Conveyance & Pump Stations	5	25	63	38	38	--	84	--	253
St. Clair - Sanilac Co. Lagoon System	9	36	89	36	36	35	107	9	357
Monroe Co. Lagoon System	2	7	16	7	7	6	19	1	65
Lenawee Co. Lagoon System	1	--	2	--	--	--	3	--	6
Land Fill Sites	2	4	35	--	--	--	2	2	45
Total Manpower	45	174	554	172	172	30	559	19	1775

LAND IRRIGATION TREATMENT ALTERNATIVE TWO

This alternative is similar to the other land treatment alternatives in that municipal-industrial wastewater would be treated in lagoons and by land irrigation. The M&I system, as shown in Figure V-9, indicates where the facilities necessary to accomplish this proposed alternative would be located. The difference results in the proposed method of stormwater treatment. The stormwater collection and storage system is the one described in Scheme Two. The treatment system is different than the earlier treatment schemes matched with this collection and storage system, in that stormwater from St. Clair and Lenawee Counties would be treated in land irrigation sites in those counties. The other stormwater would be treated in IPCT plants specifically designed for stormwater treatment and located at Macomb, Plymouth, Ypsilanti, and the Huron River, see Figure V-10.

Sludge Handling and Disposal - Table V-31 presents the treatment sites, the wastewater flows, and the sludge handling and disposal methods for this alternative. The methods of sludge treatment used vary according to the proposed wastewater treatment method. All sludge from lagoon treatment sites would be utilized for their agricultural value by application to adjacent land. Lime sludges

TABLE V-31

LAND IRRIGATION ALTERNATIVE TWO

	DESIGN TREATMENT CAPACITY		COMBUSTION PROCESSES			ULTIMATE SOLIDS DISPOSAL	
	STORM RUNOFF (MGD)	MUNICIPAL-INDUSTRIAL (MGD)	SEWAGE SLUDGE INCINERATION (Ton/Day)	LIME SLUDGE RECALCINATION (Ton/Day)	ACT. CARBON REGENERATION (Ton/Day)	SANITARY LANDFILL (Ton/Day)	LAND APPLICATION (Ton/Day)
Macomb Co. Plant	600 IPCT	—	—	1226	75	72	—
Plymouth Plant	225 IPCT	--	—	600	28	31	—
Ypsilanti Plant	225 IPCT	--	—	600	28	31	—
Huron River Plant	1000 IPCT	--	--	2043	125	119	--
Lenawee Co. Land Site	10 Land	36 Land	--	--	—	2.2	10
Monroe Co. Land Site	—	201 Land	—	--	—	50	214
St. Clair Co. Land Site	—	681 Land	—	—	—	210	904
Huron-Tuscola Land Site	125 Land	301 Land	—	--	--	0	0

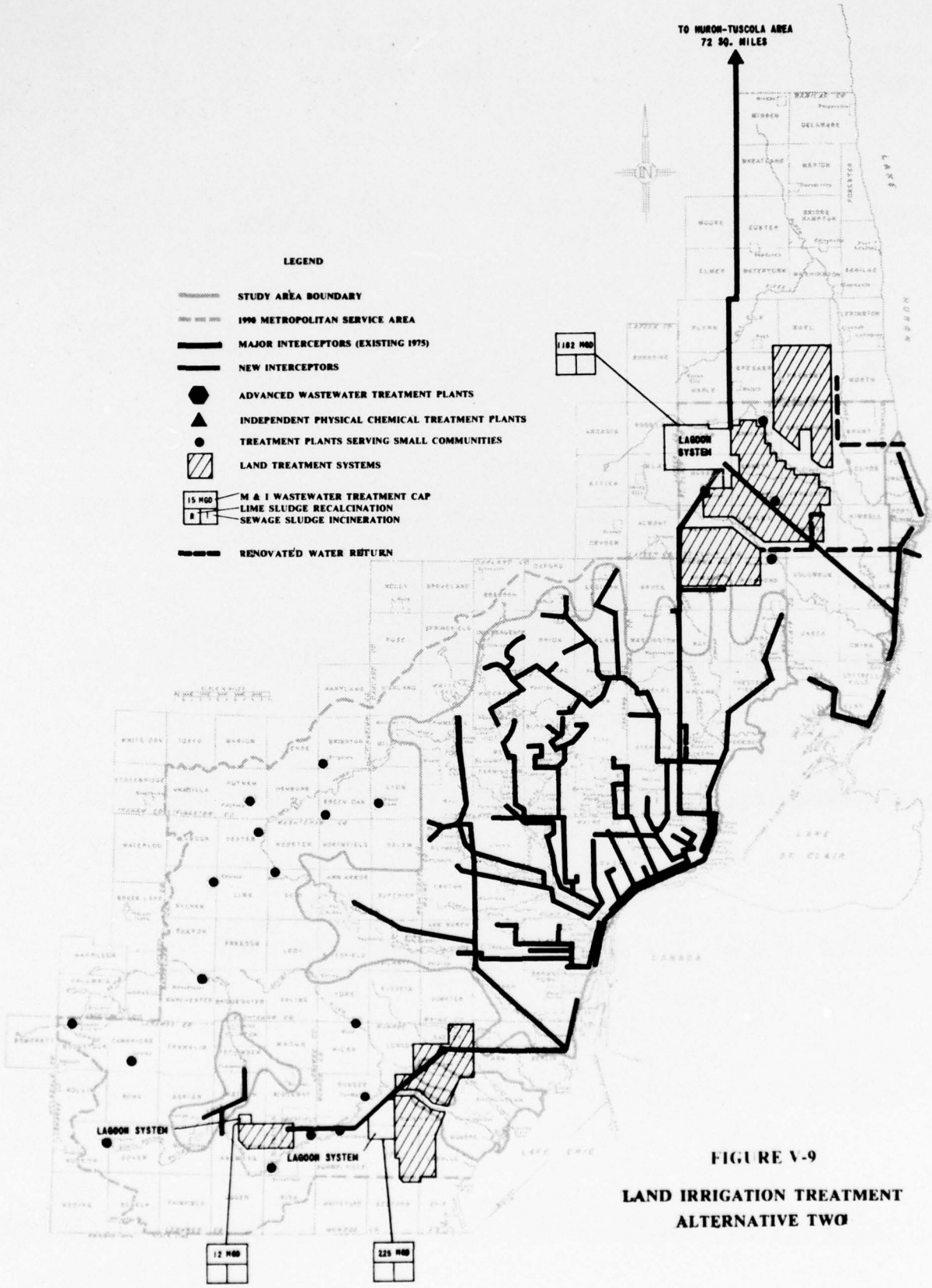

FIGURE V-9

LAND IRRIGATION TREATMENT
ALTERNATIVE TWO

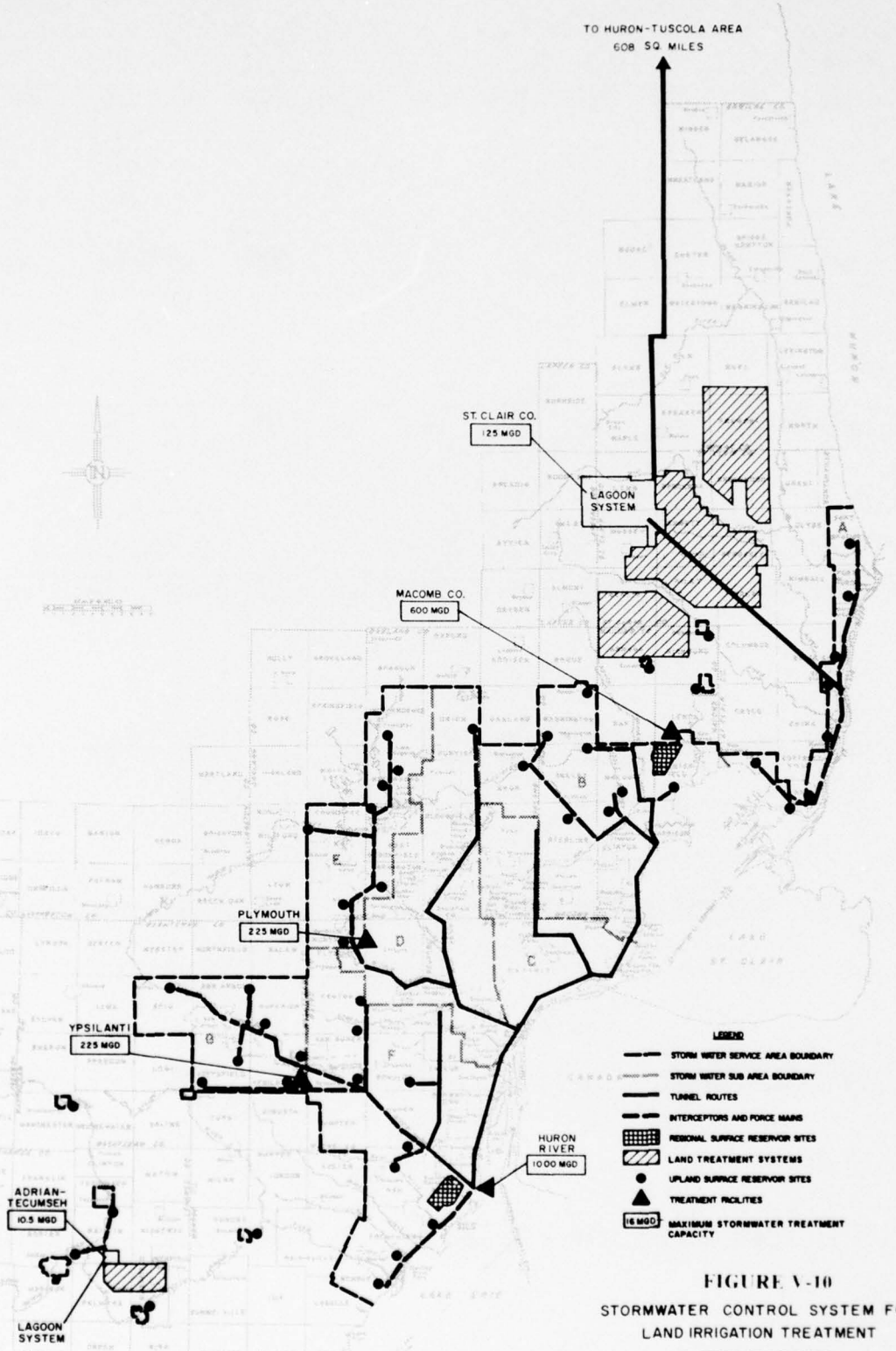

FIGURE V-10

STORMWATER CONTROL SYSTEM FOR LAND IRRIGATION TREATMENT ALTERNATIVE TWO

from stormwater treatment would be recalcined for lime recovery and for reduction of the waste material to be land filled.

System Costs - The costs of this alternative have been broken down into five systems which make up the alternative and are presented in Table V-32. More detailed cost analyses can be found in various areas of this appendix as specified below.

1. Stormwater Treatment Plants - Tables B-27, B-26.
2. Storm Collection and Storage - Table IV-56.
3. M&I Transmission and Interception - Table IV-3 and IV-4 (Systems 16, 19, 25, 27, 28, 32, 36, 40, 41, 46 & 48.
4. Lagoon Treatment Systems - Tables C-2, C-6 and C-7.
5. Land Irrigation Treatment Systems - Tables IV-54, IV-55, IV-56 & D-2.
6. Storm Treatment Sludge Landfill - Table F-7.

Resource Requirements - The land use requirements for this alternative are summarized in Table V-33. As in Land Alternative One, the major use requirement would be for the creation of a land irrigation treatment system. The amount of land required in this alternative would be less than in the other land alternative, since the system would be treating only six percent of the stormwater, in addition to all the municipal-industrial wastewater, rather than the entire wastewater flow. Other major land use requirements would be imposed by storage and treatment lagoons, sludge disposal areas, and stormwater storage facilities.

Chemical and energy requirements are summarized in Table V-34. The major demand for chemicals would come from the four stormwater treatment plants since the chlorine required for disinfection is the only chemical required in land treatment. Power requirements are again high due to the large amount of wastewater pumping required for transport to irrigation sites. Fuel requirements would result from recalcination facilities at stormwater treatment plants.

Manpower requirements are presented in Table V-35. Again the manpower estimate does not include manpower for farming operations since it has been assumed that these would be contracted and equal in cost to the field value of the farm products grown.

TABLE V-32

SUMMARY COST SHEET

LAND IRRIGATION TREATMENT ALTERNATIVE TWO

LAND - 2

	Construction Cost Million Dollars	Amortized Construction Cost Million Dollars	Amortized Replacement Cost Million Dollars	Annual Operation and Maintenance Million Dollars	Total Annual Treatment Cost Million Dollars
STORMWATER TREATMENT PLANTS					
Macomb Co. (IPCT)	$ 181.5	10.725	0.197	8.312	19.234
Plymouth (IPCT)	73.8	4.361	0.095	3.346	7.802
Ypsilanti (IPCT)	73.8	4.361	0.095	3.346	7.802
Huron River (IPCT)	290.4	17.154	0.303	13.165	30.622
M&I LAGOON & SLUDGE DISPOSAL SYSTEMS					
St. Clair-Sanilac Co. System	285.0	16.831	1.881	18.592	37.304
Monroe Co. System	82.3	4.858	0.400	4.128	9.386
Lenawee Co. System	13.4	0.790	0.026	0.358	1.174
LAND IRRIGATION SYSTEMS					
St. Clair-Sanilac Co	328.2	19.385	-	14.215	33.600
Huron Co	261.2	15.425	-	10.745	26.170
Monroe Co	122.6	7.241	-	4.296	11.537
Lenawee Co	46.2	2.729	-	1.721	4.450
SPECIAL CONVEYANCE SYSTEMS					
Wyandott-Detroit to St. Clair-Sanilac Lag.	311.2	18.382	.271	11.072	29.725
St. Clair-Sanilac Lagoons to Huron Co	227.0	13.407	.372	1.990	15.769
St. Clair-Sanilac Co. Renovated Water Ret	126.7	7.485	.153	.588	8.226
Monroe City to Huron River	15.2	.899	.054	.140	1.093
Huron River to Monroe Co. Lagoon	39.1	2.311	.095	1.813	4.219
Service to Lenawee Co. Site	24.3	1.435	.068	.366	1.869
Monroe Co. Return System	74.0	4.371	-	.057	4.428
St. Clair River to St. Clair Co Lagoons	98.3	5.804	.594	1.687	8.085
MAJOR INTERCEPTORS REQUIRED					
St. Clair Co. System	75.1	4.445	-	.390	4.835
Detroit System	42.5	2.512	-	-	2.512
Huron River System	142.1	8.395	-	.741	9.136
Lenawee Co. System	3.5	.207	-	.071	.278
STORM COLLECTION AND STORAGE SYSTEM	2561.6	151.290	-	6.422	157.712
STORM SLUDGE DISPOSAL SYSTEM					
Lenawee Co.	11.6	.683	.098	1.815	2.596
St. Clair Co.	5.9	.347	.055	1.009	1.411
	5506.6	325.833	4.757	110.385	440.975

TABLE V-33

LAND USE SUMMARY

LAND-2

Facility	Land (acres)	Land Use
Macomb Co. Plant	160	Stormwater Treatment Plant
Plymouth Plant	85	Stormwater Treatment Plant
Ypsilanti Plant	85	Stormwater Treatment Plant
Huron River Plant	220	Stormwater Treatment Plant
St. Clair Co. Land Site	31,083	Wastewater Treatment and Storage Lagoons
	33,300	Land Application of Sewage Sludge
	149,220	Land Irrigation of Treated Wastewater
Huron Co. Land Site	113,803	Land Irrigation of Treated Wastewater
Monroe Co. Land Site	6,628	Wastewater Treatment and Storage Lagoons
	7,826	Land Application of Sewage Sludge
	41,040	Land Irrigation of Treated Wastewater
Lenawee Co. Land System	465	Wastewater Treatment and Storage Lagoons
	350	Land Application of Sewage Sludge
	9,065	Land Irrigation of Treated Wastewater
St. Clair Co. Landfill	1,048	Landfill of Chemical Sludge and Storm Solids
Lenawee Co. Landfill	1,150	Same as Above
Storm Collection and Storage System	23,500	Underground and Surface Storage Facilities for Urban Storm Runoff
TOTAL	419,028	

TABLE V-34
ENERGY AND CHEMICAL REQUIREMENTS
LAND IRRIGATION TREATMENT ALTERNATIVE TWO

	ELECTRICAL POWER		CHLORINE		LIME		METHANOL	NATURAL GAS	FUEL OIL	DIESEL FUEL
	Peak MW	Average MW	Maximum T/D	Average T/D	Maximum T/D	Average T/D	Average T/D	Average MCF/D*	Average 100 G/D	Average GAL/D
Macomb Co.	30.0	9.4	175.0	51.0	425	123	--	2036	145.2	45
Plymouth	12.0	3.8	28.0	8.1	160	46	--	975	69.6	30
Ypsilanti	12.0	3.8	28.0	8.1	160	46	--	975	69.6	30
Huron River	48.0	15.2	292.0	85.0	708	205	--	3071	219.5	84
Storm Collection & Storage System	1868.5	43.4	--	--	--	--	--	--	--	1600
St. Clair Co. Lagoon System	127.5	106.3	102.1	68.1	--	--	--	--	--	1810
St. Clair Co. Irrigation	177.6	88.8	--	--	--	--	--	--	--	--
Huron-Tuscola Counties Irrigation	129.0	64.5	--	--	--	--	--	--	--	--
Monroe Co. Lagoon System	27.1	22.6	23.3	15.5	--	--	--	--	--	510
Monroe Co. Irrigation	53.0	26.5	--	--	--	--	--	--	--	--
Lenawee Co. Lagoon System	2.2	1.8	1.1	0.6	--	--	--	--	--	--
Lenawee Co. Irrigation	20.6	10.3	--	--	--	--	--	--	--	--
Major Conveyance Systems	341.2	148.0								
TOTAL	2848.7	544.4	649.5	236.4	1453	420	--	7057	503.9	4109

TABLE V-35
MANPOWER REQUIREMENTS
LAND IRRIGATION TREATMENT ALTERNATIVE TWO

	Superintendents & Supervisors	Foremen	Operators	Electricians	Maintenance Mechanics	Laboratory Technicians	Laborers	Other	Total Manpower
Macomb Co.	6	24	115	12	19	9	60	8	253
Plymouth	4	10	51	7	9	1	27	5	114
Ypsilanti	4	10	51	7	9	1	27	5	114
Huron River	8	40	191	20	31	15	100	11	416
St. Clair Co. Landfill	1	2	16	--	--	--	1	1	21
Lenawee Co. Landfill	1	2	19	--	--	--	1	1	24
Storm Collection & Storage System	2	10	50	--	--	--	20	--	82
St. Clair - Sanilac Co. Land Site	6	23	76	23	23	11	82	1	245
Huron-Tuscola Land Site	4	18	58	18	18	11	68	2	197
Monroe Co. Land Site	2	6	21	6	6	3	22	1	67
Lenawee Co. Land Site	1	3	9	3	3	1	10	--	30
St. Clair - Sanilac Co. Lagoon System	7	27	67	27	27	27	80	6	268
Monroe Co. Lagoon System	2	7	16	7	7	6	19	1	65
Lenawee Co. Lagoon System	1	--	2	--	--	--	3	--	6
Conveyance & Pump Stations	4	18	45	27	27	--	60	--	181
TOTAL MANPOWER	53	200	787	157	179	85	580	42	2083

COMBINATION WASTEWATER TREATMENT ALTERNATIVE ONE

Combination wastewater treatment alternatives attempt to create the most favorable wastewater management systems by combining the most effective wastewater management components for various portions of the study area.

This first combination alternative proposes the use of AWT facilities at existing treatment plant locations and IPCT facilities where new plants are to be built. Six plants, as shown in Figure V-11, would be used to treat municipal-industrial wastewater. Three of these plants would be advanced wastewater treatment facilities created by up-grading existing systems at Port Huron, Detroit, and Monroe. The remaining three would be new independent physical-chemical treatment plants constructed at East China, the Huron River, and Adrian-Tecumseh.

The stormwater control system, shown in Figure V-2, would have the same configuration as the stormwater proposal used for the IPCT alternatives.

Sludge Handling and Disposal - Table V-36 presents the design flows and sludge handling methods for treatment facilities in this alternative. Sewage sludge from AWT plants in Port Huron and Detroit would be dewatered on vacuum filters and disposed of by landfill.

TABLE V-36

COMBINATION WASTEWATER TREATMENT ALTERNATIVE ONE

	DESIGN TREATMENT CAPACITY		COMBUSTION PROCESSES			ULTIMATE SOLIDS DISPOSAL	
	STORM RUNOFF (MGD)	MUNICIPAL-INDUSTRIAL (MGD)	SEWAGE SLUDGE INCINERATION (Ton/Day)	LIME SLUDGE RECALCINATION (Ton/Day)	ACT. CARBON REGENERATION (Ton/Day)	SANITARY LANDFILL (Ton/Day)	LAND APPLICATION (Ton/Day)
Port Huron Plant	--	24	--	--	3	45	--
East China Plant	125 IPCT	12 IPCT	--	225	20	73	--
Macomb Co. Plant	600 IPCT	--	--	1226	75	72	--
Detroit Plant	--	806 AWT	--	895	100	862	--
Plymouth Plant	225 IPCT	--	--	600	28	31	--
Ypsilanti Plant	225 IPCT	--	--	600	28	31	--
Huron River Plant	1000 IPCT	525 IPCT	--	2625	191	485	--
Monroe Plant	--	40 AWT	28	--	5	47	--
Adrian-Tecumseh Plant	10.5 IPCT	12 IPCT	--	--	3	38	--

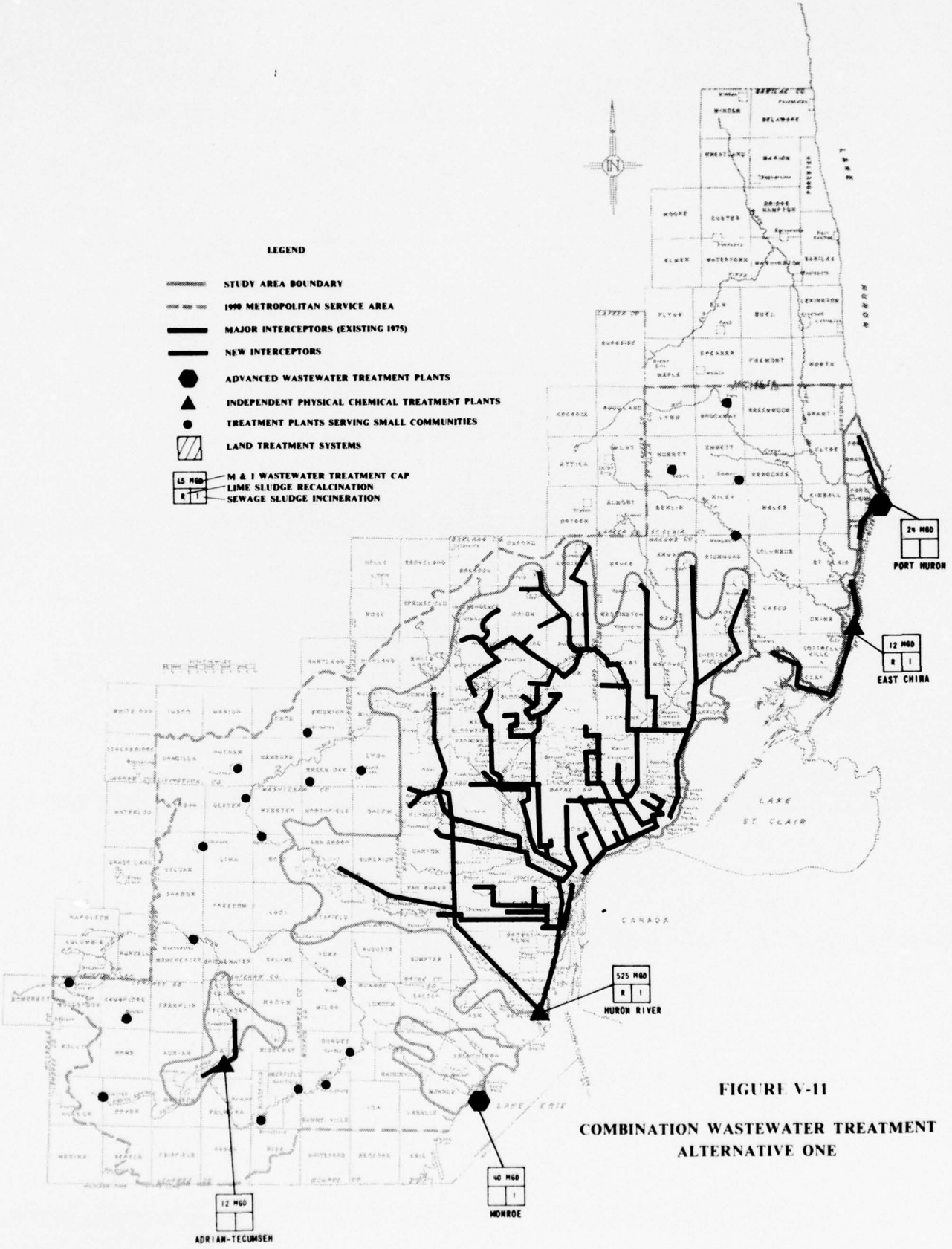

FIGURE V-11

COMBINATION WASTEWATER TREATMENT
ALTERNATIVE ONE

The AWT plant at Monroe would incinerate prior to landfill to reduce the material. Lime sludges from plants at Macomb, Detroit, Huron River, Plymouth and Ypsilanti would be recalcined to reclaim the lime and reduce waste material. All other sludges would be dewatered and disposed of in landfill designed specifically for sludge disposal.

System Costs - Table V-37 presents a breakdown of costs for Combination Wastewater Treatment Alternative One. Detailed cost analyses of the components can be found in the portions of this appendix specified below.

1. M&I Plants - Tables A-9, A-24, and A-10.
2. Stormwater Plants - Tables B-26, and B-27.
3. Storm and M&I Plants - Tables B-18, B-6 and B-23.
4. M&I Interceptors - Table IV-3 and IV-4 (Systems 1, 4 and 7).
5. Stormwater Collection and Storage - Table IV-56.
6. Sludge Landfill - Table F-8.

Resource Requirements - The land use requirements for this alternative are similar to those for the IPCT and AWT Alternatives. The major requirement would be for stormwater storage facilities. Landfill sites would be of significant size because volume reduction by incineration would be limited. Table V-38 presents the land use summary for this alternative.

Chemical and energy demands are presented in Table V-39. The most significant power demand would be the peak requirement exerted by stormwater pumping facilities. Chemical requirements would vary on the type of treatment employed at each site and are similar to those in the AWT and IPCT alternatives. Fuel requirements reflect the amount of incineration and recalcination at each site.

The manpower requirements are presented in Table V-40. The estimate has been broken down into various labor categories for the various facilities.

TABLE V-37

SUMMARY COST SHEET

COMBINATION WASTEWATER TREATMENT ALTERNATIVE ONE

	Construction Cost Million Dollars	Amortized Construction Cost Million Dollars	Amortized Replacement Cost Million Dollars	Annual Operation and Maintenance Million Dollars	Total Annual Treatment Cost Million Dollars
M&I PLANTS					
Port Huron (AWT)	16.87	.996	.049	1.808	2.853
Detroit (AWT)	381.20	22.515	.610	40.278	63.403
Monroe (AWT)	31.63	1.869	.077	2.880	4.826
STORMWATER PLANTS					
Ypsilanti (IPCT)	73.8	4.361	.095	3.346	7.802
Plymouth (IPCT)	73.8	4.361	.095	3.346	7.802
Macomb County (IPCT)	181.5	10.725	.197	8.312	19.234
STORM AND M&I PLANTS					
Huron River (IPCT)	547.40	32.330	2.165	40.557	75.052
East China (IPCT)	57.73	3.412	.207	2.992	6.611
Adrian-Tecumseh (IPCT)	11.30	.671	.036	.839	1.546
M&I INTERCEPTORS					
St. Clair Co. System	11.27	.665	--	.104	.769
Detroit System	42.52	2.512	--	--	2.512
Huron River System	158.84	9.381	--	.740	10.121
Adrian System	3.50	.207	--	.017	.224
STORMWATER COLLECTION & STORAGE SYSTEM	2561.62	151.290	--	6.422	157.712
SLUDGE LANDFILL					
Lenawee Co. Site	15.51	.916	.115	1.973	3.004
St. Clair Co. Site	6.67	.394	.077	1.231	1.702
TOTAL SYSTEM COSTS	4175.16	246.605	3.723	114.845	365.173

TABLE V-38

LAND USE SUMMARY

COMBINATION - 1

Facility	Land (acres)	Land Use
Port Huron Plant	38*	Wastewater Treatment Plant
East China Plant	80	Wastewater Treatment Plant
Macomb Co. Plant	160	Stormwater Treatment Plant
Plymouth Plant	85	Stormwater Treatment Plant
Ypsilanti Plant	85	Stormwater Treatment Plant
Detroit Plant	320*	Wastewater Treatment Plant
Huron River Plant	375	Wastewater Treatment Plant
Monroe Plant	50*	Wastewater Treatment Plant
Adrian-Tecumseh Plant	20	Wastewater Treatment Plant
St. Clair Co. Landfill	1,275	Sanitary Landfill of Chemical and Sewage Sludges, Waste Ash and Storm Solids
Lenawee Co. Landfill	4,058	Same as Above
Storm Collection & Storage System	23,500	Underground and Surface Storage Facilities for Urban Storm Runoff
TOTAL	30,046	

*In addition to existing plant site

TABLE V-39
ENERGY AND CHEMICAL REQUIREMENTS
COMBINATION WASTEWATER TREATMENT ALTERNATIVE ONE

	ELECTRICAL POWER		CHLORINE		LIME		METHANOL	NATURAL GAS	FUEL OIL	DIESEL FUEL
	Peak MW	Average MW	Maximum T/D	Average T/D	Maximum T/D	Average T/D	Average T/D	Average MCF/D*	Average 100 G/D	Average GAL/D
Port Huron	4.6	4.6	0.9	0.9	25	20	3.5	123	6.0	33
Detroit	131.0	131.0	30.0	30.0	776	633	117.7	8090	605.5	877
Monroe	7.4	7.4	13.5	1.5	44	36	4.0	838	59.2	22
Ypsilanti	12.0	3.8	28.0	8.1	160	46	--	975	69.6	44
Plymouth	12.0	3.8	28.0	8.1	160	46	--	975	69.6	44
Macomb Co.	30.0	9.4	175.0	51.0	425	123	--	2036	145.2	44
Huron River	75.3	42.5	836.0	357.0	1091	588	--	12,071	862.5	336
East China	7.9	3.1	28.4	10.8	114	91	--	182	12.4	33
Adrian-Tecumseh	1.3	1.1	14.6	7.3	33	22	--	145	10.3	11
Storm Collection & Storage System	1868.5	43.4	--	--	--	--	--	--	--	1600
Conveyance to Huron River	3.5	3.5	--	--	--	--	--	--	--	--
Conveyance to Port Huron & East China	0.2	0.2	--	--	--	--	--	--	--	--
TOTAL	2153.7	253.8	1154.4	474.7	2828	1605	125.2	25,435	1840.3	3044

* MCF = 1,000 Cubic Feet

TABLE V-40
MANPOWER REQUIREMENTS
COMBINATION WASTEWATER TREATMENT ALTERNATIVE ONE

	Superintendents & Supervisors	Foremen	Operators	Electricians	Maintenance Mechanics	Laboratory Technicians	Laborers	Other	Total Manpower
Port Huron	4	4	40	3	7	5	14	1	78
East China	4	7	49	5	8	5	24	5	107
Macomb Co.	6	24	115	12	19	9	60	8	253
Detroit	23	128	704	64	80	46	300	19	1364
Plymouth	4	10	51	7	9	1	27	5	114
Ypsilanti	4	10	51	7	9	1	27	5	114
Huron River	13	75	371	43	61	28	200	21	812
Monroe	5	9	50	4	9	6	20	3	106
Adrian - Tecumseh	1	1	17	1	4	2	7	1	34
St. Clair Co. Landfill	1	1	17	--	--	--	1	1	21
Lenawee Co. Landfill	1	2	39	--	--	--	2	2	46
Storm Collection & Storage System	2	10	50	--	--	--	20	--	82
Total Manpower	68	281	1554	146	206	103	702	71	3131

COMBINATION WASTEWATER TREATMENT ALTERNATIVE TWO

Combination Wastewater Alternative Two is similar to the first combination alternative in that it proposes the use of AWT and IPCT facilities to treat the total wastewater flow. Four plants, rather than three, however, would be advanced wastewater treatment facilities created by up-grading existing systems at Port Huron, Detroit, Monroe, and Wyandotte. Wyandotte was not included in the first combination alternative. The purpose of this was to test the viability of maintaining the Wyandotte plant in a regional scheme and to make use of the existing treatment. The remaining three plants of this seven plant M&I system, shown in Figure V-12, would be new independent physical-chemical treatment plants constructed at East China, the Huron River, and Adrian-Tecumseh.

The stormwater control system is identical to the system used in the first combination alternative and the IPCT alternatives and is shown in Figure V-2.

Sludge Handling and Disposal - Table V-41 presents the design flows and sludge handling and disposal methods for treatment facilities in this alternative. Like the first combination alternative, incineration

TABLE V-41

COMBINATION WASTEWATER TREATMENT ALTERNATIVE TWO

	DESIGN TREATMENT CAPACITY		COMBUSTION PROCESSES			ULTIMATE SOLIDS DISPOSAL	
	STORM RUNOFF (MGD)	MUNICIPAL-INDUSTRIAL (MGD)	SEWAGE SLUDGE INCINERATION (Ton/Day)	LIME SLUDGE RECALCINATION (Ton/Day)	ACT. CARBON REGENERATION (Ton/Day)	SANITARY LANDFILL (Ton/Day)	LAND APPLICATION (Ton/Day)
Port Huron Plant	–	24 AWT	–	–	3	45	–
East China Plant	125 IPCT	12 IPCT	–	225	20	73	–
Macomb Co. Plant	600 IPCT	–	–	1226	75	72	–
Detroit Plant	–	806 AWT	–	895	100	862	–
Wyandotte Plant	–	125 AWT	274	139	16	81	–
Plymouth Plant	225 IPCT	–	–	600	28	31	–
Ypsilanti Plant	225 IPCT	–	–	600	28	31	–
Huron River Plant	1000 IPCT	400 IPCT	–	2500	265	692	–
Monroe Plant	–	40 AWT	28	–	5	42	–
Adrian-Tecumseh Plant	10.5 IPCT	12 IPCT	–	–	8	40	–

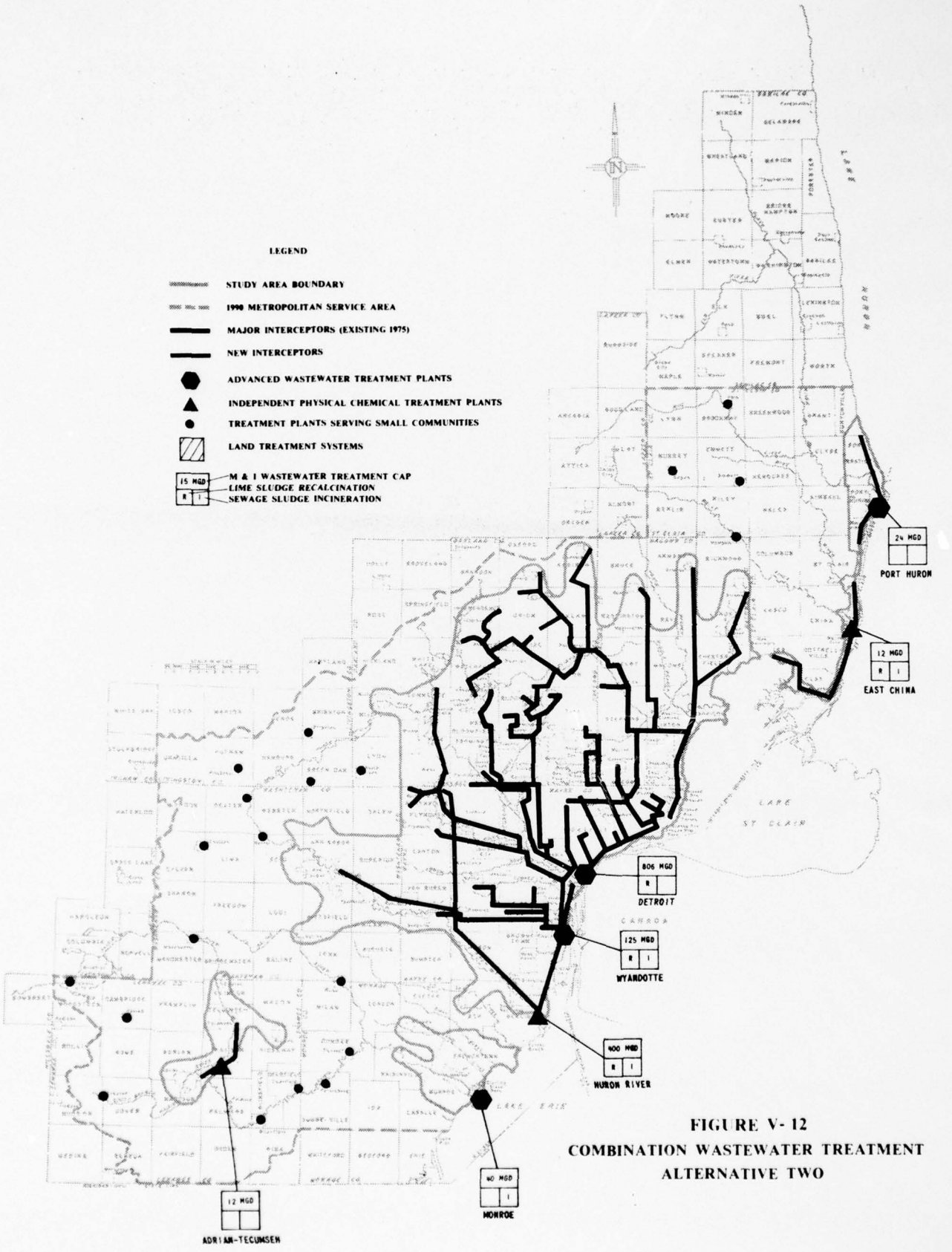

FIGURE V-12
COMBINATION WASTEWATER TREATMENT
ALTERNATIVE TWO

and recalcination would be implemented in most locations. Sewage sludge from Monroe would be incinerated. Sewage sludges from Port Huron and Detroit would be dewatered and landfilled. Lime sludges at all plants except Port Huron, Monroe and Adrian-Tecumseh would be recalcined.

System Costs - Table V-42 presents the costs for the second combination alternative. The costs have been broken out into components and detailed component costs analyses can be found in the portions of this appendix specified below.

1. M&I Plants - Tables A-9, A-24, A-10, and A-12.
2. Stormwater Plants - Tables B-26, B-26 and B-27.
3. Storm and M&I Plants - Tables B-16, B-6 and B-23.
4. Sludge Disposal Sites - Table F-9.
5. M&I Transmission lines - Table IV-3 and IV-4 (Systems 1, 4 & 8).
6. Stormwater Collection and Storage - Table IV-56.

Resource Requirements - The land use requirements for this alternative, presented in Table V-43, are similar to the first combination alternative. Stormwater collection and storage facilities would again create the greatest demand for land. Landfill sites would be large because all sewage and lime sludges would not be incinerated or recalcined.

Chemical and energy demands, presented in Table V-44, are also similar to those in the first combination alternative. The difference in the totals for these requirements is due to the affect of retaining and upgrading the existing Wyandotte plant to AWT and correspondingly reducing the IPCT plant at the Huron River by 125 MGD.

The manpower requirements, presented in Table V-45, for this alternative vary only in the numbers for the Wyandotte plant and Huron River plant and are due to the affects caused by the addition and reduction of these two facilities.

TABLE V-42

SUMMARY COST SHEET

COMBINATION WASTEWATER TREATMENT ALTERNATIVE TWO

	Construction Cost Million Dollars	Amortized Construction Cost Million Dollars	Amortized Replacement Cost Million Dollars	Annual Operation and Maintenance Million Dollars	Total Annual Treatment Cost Million Dollars
M&I PLANTS					
Port Huron (AWT)	16.87	.996	.049	1.808	2.853
Detroit (AWT)	381.20	22.515	.610	40.278	63.403
Monroe (AWT)	31.63	1.869	.077	2.880	4.826
Wyandotte (AWT)	68.10	4.024	.186	8.156	12.366
STORMWATER PLANTS					
Ypsilanti (IPCT)	73.80	4.361	.095	3.346	7.802
Plymouth (IPCT)	73.80	4.361	.095	3.346	7.802
Macomb County (IPCT)	181.50	10.725	.197	8.312	19.234
STORM AND M&I PLANTS					
Huron River (IPCT)	493.30	29.137	1.835	35.059	16.031
East China (IPCT)	57.73	3.412	.207	2.992	6.611
Adrian-Tecumseh (IPCT)	11.30	.671	.036	.839	1.546
SLUDGE DISPOSAL SITES					
Lenawee Co.	17.00	1.005	.138	2.222	3.365
St. Clair Co.	6.67	.394	.080	1.133	1.607
M&I TRANSMISSION LINES					
St. Clair Co. System	11.27	.665	--	.104	.769
Detroit System	42.52	2.512	--	--	2.512
Huron River System	157.55	9.305	--	.741	10.046
Adrian System	3.50	.207	--	.017	.224
STORMWATER COLLECTION & STORAGE SYSTEM	2561.62	151.290	--	6.422	157.712
TOTAL SYSTEM COSTS	4189.36	247.449	3.605	117.655	368.709

TABLE V-43

LAND USE SUMMARY

COMBINATION - 2

Facility	Land (acres)	Land Use
Port Huron Plant	38*	Wastewater Treatment Plant
East China Plant	80	Wastewater Treatment Plant
Macomb Co. Plant	160	Stormwater Treatment Plant
Plymouth Plant	85	Stormwater Treatment Plant
Ypsilanti Plant	85	Stormwater Treatment Plant
Detroit Plant	320*	Wastewater Treatment Plant
Wyandotte Plant	100*	Wastewater Treatment Plant
Huron River Plant	350	Wastewater Treatment Plant
Monroe Plant	50*	Wastewater Treatment Plant
Adrian-Tecumseh Plant	20	Wastewater Treatment Plant
St. Clair Co. Landfill	1,225	Sanitary Landfill of Chemical and Sewage Sludges, Waste Ash and Storm Solids
Lenawee Co. Landfill	4,339	Same As Above
Storm Collection & Storage System	23,500	Underground and Surface Storage of Urban Storm Runoff
TOTAL	30,353	

*In addition to existing plant site

TABLE V-44
ENERGY AND CHEMICAL REQUIREMENTS
COMBINATION WASTEWATER TREATMENT ALTERNATIVE TWO

	ELECTRICAL POWER		CHLORINE		LIME		METHANOL	NATURAL GAS	FUEL OIL	DIESEL FUEL
	Peak MW	Average MW	Maximum T/D	Average T/D	Maximum T/D	Average T/D	Average T/D	Average MCF/D*	Average 100 G/D	Average GAL/D
Port Huron	4.6	4.6	0.9	0.9	20	20	3.5	123	6.0	36
East China	7.9	3.1	28.4	10.8	115	39	--	182	12.4	36
Macomb Co.	30.0	9.4	175.0	51.0	425	123	--	2036	145.2	45
Detroit	131.0	131.0	30.0	30.0	633	633	117.7	8090	605.5	871
Ypsilanti	12.0	3.8	28.0	8.1	160	46	--	975	69.6	30
Plymouth	12.0	3.8	28.0	8.1	160	46	--	975	69.6	30
Mouth of Huron River	69.2	36.4	706.0	292.0	1072	496	--	9971	711.8	483
Monroe	7.4	7.4	1.5	1.5	36	36	4.0	1534	59.2	45
Adrian-Tecumseh	1.3	1.1	14.6	7.3	33	22	--	145	10.3	28
Wyandotte	22.0	22.0	4.6	4.6	98	98	18.3	2871	204.9	81
Storm Collection & Storage System	1868.5	43.4	--	--	--	--	--	--	--	1600
TOTAL	2165.9	266.0	1017.0	414.3	2752	1570	143.5	26,908	1894.5	3285

* MCF - 1,000 Cubic Feet

TABLE V-45
MANPOWER REQUIREMENTS
COMBINATION WASTEWATER TREATMENT ALTERNATIVE TWO

	Superintendents & Supervisors	Foremen	Operators	Electricians	Maintenance Mechanics	Laboratory Technicians	Laborers	Other	Total Manpower
East China	4	7	49	5	8	5	24	5	107
Port Huron	4	4	40	3	7	5	14	1	78
Macomb Co.	6	24	115	12	19	9	60	8	253
Detroit	23	128	704	64	80	46	300	19	1364
Plymouth	4	10	51	7	9	1	27	5	114
Ypsilanti	4	10	51	7	9	1	27	5	114
Huron River	13	68	331	39	56	25	175	19	726
Monroe	5	9	50	4	9	6	20	3	106
Adrian - Tecumseh	1	1	17	1	4	2	7	1	34
St. Clair Co. Landfill	1	2	17	--	--	--	1	1	22
Lenawee Co. Landfill	1	3	43	--	--	--	2	2	51
Storm Collection & Storage System	2	10	50	--	--	--	20	--	82
Wyandotte	8	24	113	10	14	8	50	5	232
Total Manpower	76	300	1631	152	215	108	727	74	3283

COMBINATION WASTEWATER TREATMENT ALTERNATIVE THREE

Combination Wastewater Treatment Alternative Three would use all three methods of wastewater treatment investigated in this study to treat municipal-industrial wastewater, see Figure V-13. Four existing conventional plants at Port Huron, Detroit, Wyandotte and Monroe would be upgraded to AWT plants to make maximum use of existing treatment facilities. A new regional IPCT plant would be located at the Huron River to treat wastewater from the new regional interceptor network serving the newly developed area. The wastewater in southern St. Clair County and Lenawee County would be transported to sites within these counties for lagoon and land irrigation type treatment.

The stormwater control system, shown in Figure V-14, would utilize a collection and storage system as described in Scheme Two. From these storage facilities the water would be conveyed to IPCT stormwater treatment facilities or to land irrigation treatment areas. The IPCT plants would be located at the Huron River, Macomb County, Plymouth, and Ypsilanti. The land irrigation areas would be adequate to receive both stormwater and M&I wastewater.

Sludge Handling and Disposal - Table V-46 presents the design flows and sludge handling and disposal methods at the proposed treatment sites for this alternative. Sewage sludge from AWT plants at Wyandotte and Monroe would be incinerated prior to landfill. Lime sludges from plants at the Huron River, Plymouth, Ypsilanti, Macomb, Detroit and Wyandotte would be recalcined to reclaim lime and reduce waste material. All other treatment plant sludges would be dewatered and landfilled at sites designed specifically for sewage sludge disposal. All sludges from lagoon treatment sites would be utilized for their agricultural value by application to land adjacent to the sites.

System Costs - Table V-47 presents the breakdown of costs for this alternative. More detailed cost analyses of these components can be found in other portions of this appendix as specified below.

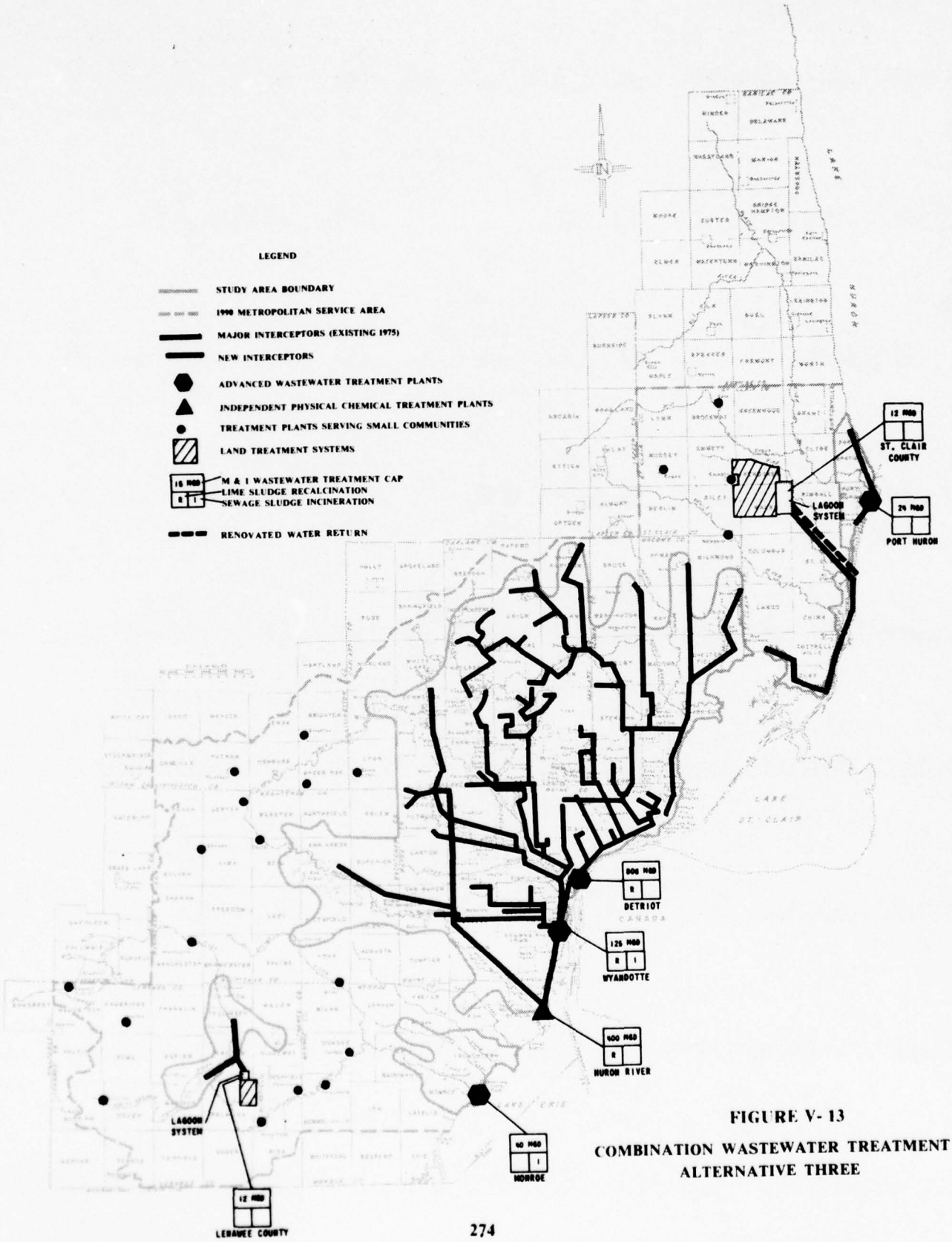

FIGURE V- 13

COMBINATION WASTEWATER TREATMENT ALTERNATIVE THREE

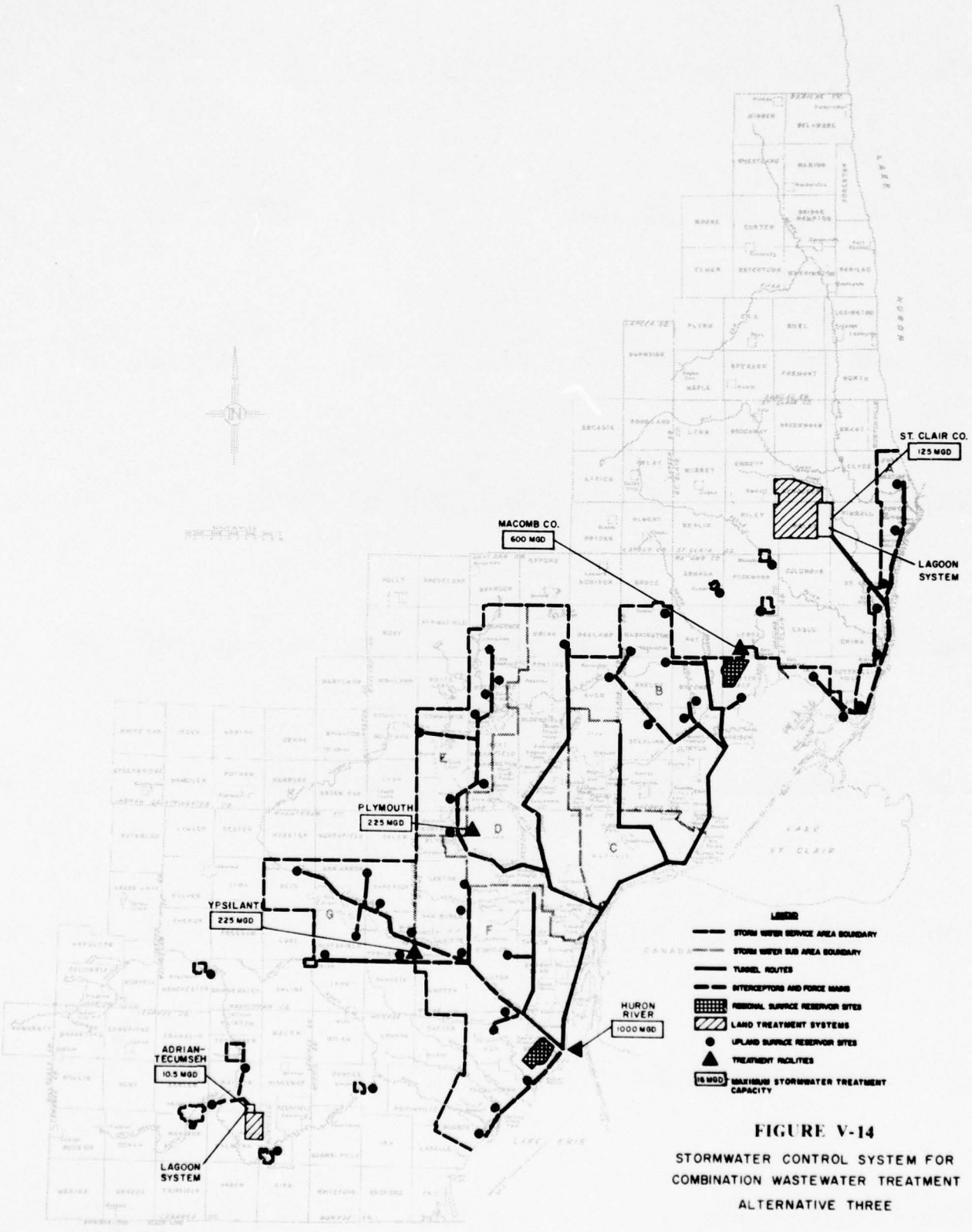

FIGURE V-14

STORMWATER CONTROL SYSTEM FOR COMBINATION WASTEWATER TREATMENT ALTERNATIVE THREE

1. M&I Plants - Tables A-8, A-24, A-14, and A-10.
2. Stormwater Plants - Tables A-27, A-26, and A-26.
3. Storm and M&I Plants - Table A-16.
4. Sludge Landfill - Table F-10.
5. Lagoon Treatment Systems - Tables C-4 and C-7.
6. Land Irrigation Treatment Systems - Tables D-3 and D-4.
7. Interceptors and Transmission Lines - Tables IV-3 and IV-4 (Systems 4, 8, 22, 27 & 43).
8. Stormwater Collection and Storage - Table IV-56.

Resource Requirements - The land requirements for this alternative are presented in Table V-48. The land treatment sites would require the largest amount of land with the stormwater collection and storage a close second. These two facilities require 90 percent of the total land for this alternative. Much of the remainder is for landfill of sludges and sludge residue.

The chemical and energy requirements, presented in Table V-49, vary greatly because of the numerous treatment methods and processes being used. The total values show a good example of a totally integrated regional wastewater management alternative.

The manpower estimate is presented in Table V-50. As in other alternatives containing land treatment systems, labor estimates do not include manpower estimates for farming operations at land treatment sites.

TABLE V-46

COMBINATION WASTEWATER TREATMENT ALTERNATIVE THREE

	DESIGN TREATMENT CAPACITY		COMBUSTION PROCESSES			ULTIMATE SOLIDS DISPOSAL	
	STORM RUNOFF (MGD)	MUNICIPAL-INDUSTRIAL (MGD)	SEWAGE SLUDGE INCINERATION (Ton/Day)	LIME SLUDGE RECALCINATION (Ton/Day)	ACT. CARBON REGENERATION (Ton/Day)	SANITARY LANDFILL (Ton/Day)	LAND APPLICATION (Ton/Day)
Port Huron Plant	–	24 AWT	–	–	3	45	–
Macomb Co. Plant	600 IPCT	–	–	1226	75	72	–
Detroit Plant	–	806 AWT	–	895	100	862	–
Wyandotte Plant	–	125 AWT	274	139	16	81	–
Plymouth Plant	225 IPCT	–	–	600	28	31	–
Ypsilanti Plant	225 IPCT	–	–	600	28	31	–
Huron River Plant	1000 IPCT	400 IPCT	–	2500	265	692	–
Monroe Plant	–	40 AWT	28	–	5	47	–
St. Clair Co. Land Site	125 Land	12 Land	–	–	–	–	10
Lenawee Co. Land Site	10.5 Land	12 Land	–	–	–	–	10

TABLE V-47

SUMMARY COST SHEET

COMBINATION WASTEWATER TREATMENT ALTERNATIVE THREE

	Construction Cost Million Dollars	Amortized Construction Cost Million Dollars	Amortized Replacement Cost Million Dollars	Annual Operation and Maintenance Million Dollars	Total Annual Treatment Cost Million Dollars
M&I PLANTS					
Port Huron (AWT)	16.87	.996	.049	1.808	2.853
Detroit (AWT)	381.20	22.515	.610	40.278	63.403
Wyandotte (AWT)	68.10	4.024	.186	8.156	12.366
Monroe (AWT)	31.63	1.869	.077	2.880	4.826
STORMWATER PLANTS					
Macomb Co. (IPCT)	181.50	10.725	.197	8.312	19.234
Plymouth (IPCT)	73.80	4.361	.095	3.346	7.802
Ypsilanti (IPCT)	73.80	4.361	.095	3.346	7.802
STORM AND M&I PLANTS					
Huron River (IPCT)	493.30	29.137	1.835	35.059	66.031
TREATMENT PLANT SLUDGE LANDFILL					
St. Clair Co. Site	6.60	.390	.083	1.034	1.507
Lenawee Co. Site	15.70	.928	.130	2.035	3.093
LAND TREATMENT SYSTEMS					
St. Clair Lagoon & Sludge Disposal System	26.94	1.591	.167	1.558	3.316
St. Clair Irrigation System	43.38	2.562	--	1.525	4.087
Lenawee Lagoon & Sludge Disposal System	13.38	.790	.026	.358	1.174
Lenawee Irrigation System	10.00	.591	--	.345	.936
INTERCEPTION & TRANSMISSION LINES					
Marysville to Port Huron	3.42	.202	--	.032	.234
St. Clair Co. to Lagoon Site	41.16	2.431	.233	.736	3.400
St. Clair Co. Land Site to St. Clair River	14.18	.837	--	.011	.848
Detroit System	42.52	2.512	--	--	2.512
Huron River System	157.55	9.305	--	.741	10.046
Lenawee Co. System	5.26	.311	.008	.044	.363
STORMWATER COLLECTION AND STORAGE SYSTEM	2561.62	151.290	--	6.422	157.712
TOTAL SYSTEM COSTS	4261.91	251.728	3.791	118.026	373.045

TABLE V-48

LAND USE SUMMARY

COMBINATION - 3

Facility	Land (acres)	Land Use
Port Huron Plant	38*	Wastewater Treatment Plant
St. Clair Co. Land Site	2226	Wastewater Treatment and Storage Lagoons
	350	Land APPLICATION of Sewage Sludge
	19,780	Land Irrigation of Treated Wastewater
Macomb Co. Plant	160	Stormwater Treatment Plant
Plymouth Plant	85	Stormwater Treatment Plant
Ypsilanti Plant	85	Stormwater Treatment Plant
Detroit Plant	320*	Wastewater Treatment Plant
Wyandotte Plant	100*	Wastewater Treatment Plant
Huron River Plant	350	Wastewater Treatment Plant
Monroe Plant	50*	Wastewater Treatment Plant
Lenawee Co. Land Site	465	Wastewater Treatment and Storage Lagoons
	350	Land Application of Sewage Sludge
	3,960	Land Irrigation of Treated Wastewater
St. Clair Co. Landfill	1,157	Sanitary Landfill of Chemical and Sewage Sludges, Waste Ash, and Storm Solids
Lenawee Co. Landfill	4,275	Same as Above
Storm Collection & Storage Facility	23,500	Underground and Surface Storage Facilities for Urban Storm Runoff
TOTAL	57,251	

*In addition to existing plant site

TABLE V-49
ENERGY AND CHEMICAL REQUIREMENTS
COMBINATION WASTEWATER TREATMENT ALTERNATIVE THREE

	ELECTRICAL POWER		CHLORINE		LIME		METHANOL	NATURAL GAS	FUEL OIL	DIESEL FUEL
	Peak MW	Average MW	Maximum T/D	Average T/D	Maximum T/D	Average T/D	Average T/D	Average MCF/D*	Average 100 G/D	Average GAL/D
Detroit	131.0	131.0	30.0	30.0	633	633	117.7	8090	605.5	871
Monroe	7.4	7.4	1.5	1.5	36	36	4.0	1534	59.2	45
Port Huron	4.6	4.6	0.9	0.9	20	20	3.5	123	6.0	36
Macomb Co.	30.0	9.4	175.0	51.0	425	123	--	2036	145.2	45
Plymouth	12.0	3.8	28.0	8.1	160	46	--	975	69.6	30
Ypsilanti	12.0	3.8	28.0	8.1	160	46	--	975	69.6	30
Huron River	69.2	36.4	706.0	292.0	1187	588	--	9971	711.8	483
Storm Collection & Storage System	1868.5	43.4	--	--	--	--	--	--	--	1600
St. Clair Co. Lagoon System & Transmission	26.0	19.3	7.8	2.7	--	--	--	--	--	220
St. Clair Co. Irrigation	17.6	6.1	--	--	--	--	--	--	--	--
Lenawee Co. Lagoon System & Transmission	2.6	2.0	1.6	0.9	--	--	--	--	--	--
Lenawee Co. Irrigation	3.4	1.8	--	--	--	--	--	--	--	--
TOTAL	2184.3	269.0	967.5	395.2	2621	1492	125.2	23,710	1666.9	3360

* MCF = 1,000 Cubic Feet

TABLE V-50
MANPOWER REQUIREMENTS
COMBINATION WASTEWATER TREATMENT ALTERNATIVE THREE

	Superintendents & Supervisors	Foremen	Operators	Electricians	Maintenance Mechanics	Laboratory Technicians	Laborers	Other	Total Manpower
Port Huron	4	4	40	3	7	5	14	1	78
Macomb Co.	6	24	115	12	19	9	60	8	253
Detroit	23	128	704	64	80	46	300	19	1364
Wyandotte	8	24	113	10	14	8	50	5	232
Plymouth	4	10	51	7	9	1	27	5	114
Ypsilanti	4	10	51	7	9	1	27	5	114
Huron River	13	68	331	39	56	25	175	19	726
Monroe	5	9	50	4	9	6	20	3	106
St. Clair Co. Landfill	1	2	17	--	--	--	1	1	22
Lenawee Co. Landfill	1	3	41	--	--	--	2	2	49
Storm Collection & Storage System	2	10	50	--	--	--	20	--	82
St. Clair Land Site	2	7	21	8	8	4	24	--	74
Lenawee Land Site	1	--	4	1	1	1	5	--	13
Total Manpower	74	299	1583	155	212	106	725	68	3227

COMBINATION WASTEWATER TREATMENT ALTERNATIVE FOUR

This alternative would use both land treatment facilities and advanced treatment plants for the treatment of municipal-industrial wastewater, see Figure V-15. Four existing conventional plants at Port Huron, Detroit, Wyandotte and Monroe would be up-graded to AWT facilities. The remaining wastewater flow would be transported to lagoon and land irrigation treatment areas in St. Clair County, Monroe County, and Lenawee County.

The stormwater control system would be identical to the system in the third combination alternative as shown in Figure V-14. The collection and storage system is described in Scheme Two and the treatment would take place in IPCT plants at the Huron River, Macomb County, Plymouth and Ypsilanti and at land irrigation sites in St. Clair County and Lenawee County.

Sludge Handling and Disposal - The design flows and sludge handling methods for the treatment facilities in this alternative are presented in Table V-51. Sludges would be treated similar to those proposed in the third combination alternative. Sewage sludge from AWT plants at Wyandotte and Monroe would be incinerated prior to landfill. Lime sludges from plants at the Huron River, Plymouth, Ypsilanti, Macomb County, Detroit and Wyandotte would be recalcined and the lime reclaimed for reuse. The remaining treatment plant sludges would be dewatered and hauled to a landfill designed especially for sludge disposal. Due to the larger amount of lagoon wastewater treatment being proposed for this alternative, the amount of treatment sludges from these facilities would be larger than those in the third combination alternative. These sludges would also be utilized for their agricultural value by application to land adjacent to the lagoons.

System Costs - Table V-52 presents a breakdown of costs for Combination Wastewater Alternative Four. The Breakdown presents costs for six systems which make up the alternative. More detailed cost analyses of the

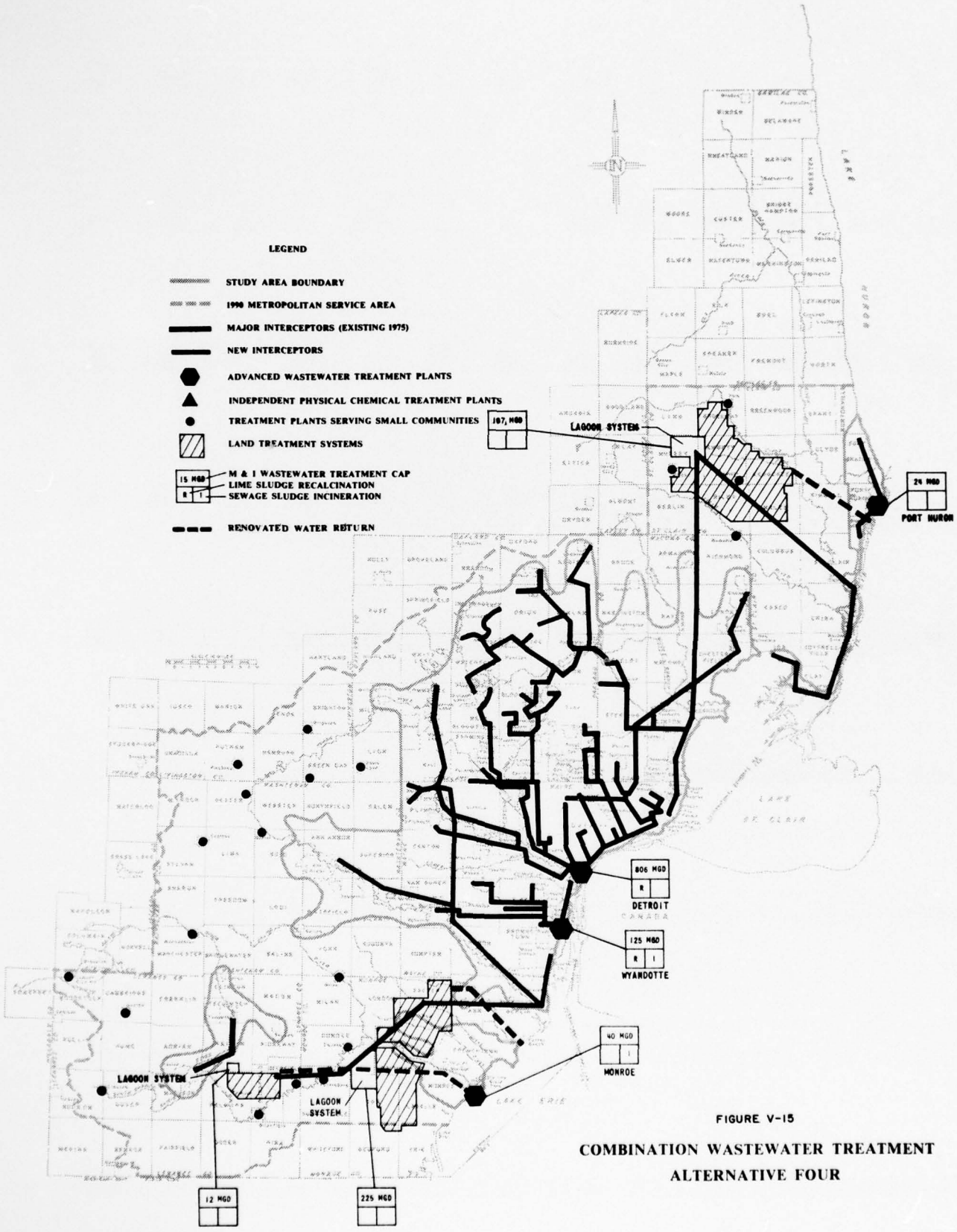

FIGURE V-15

COMBINATION WASTEWATER TREATMENT
ALTERNATIVE FOUR

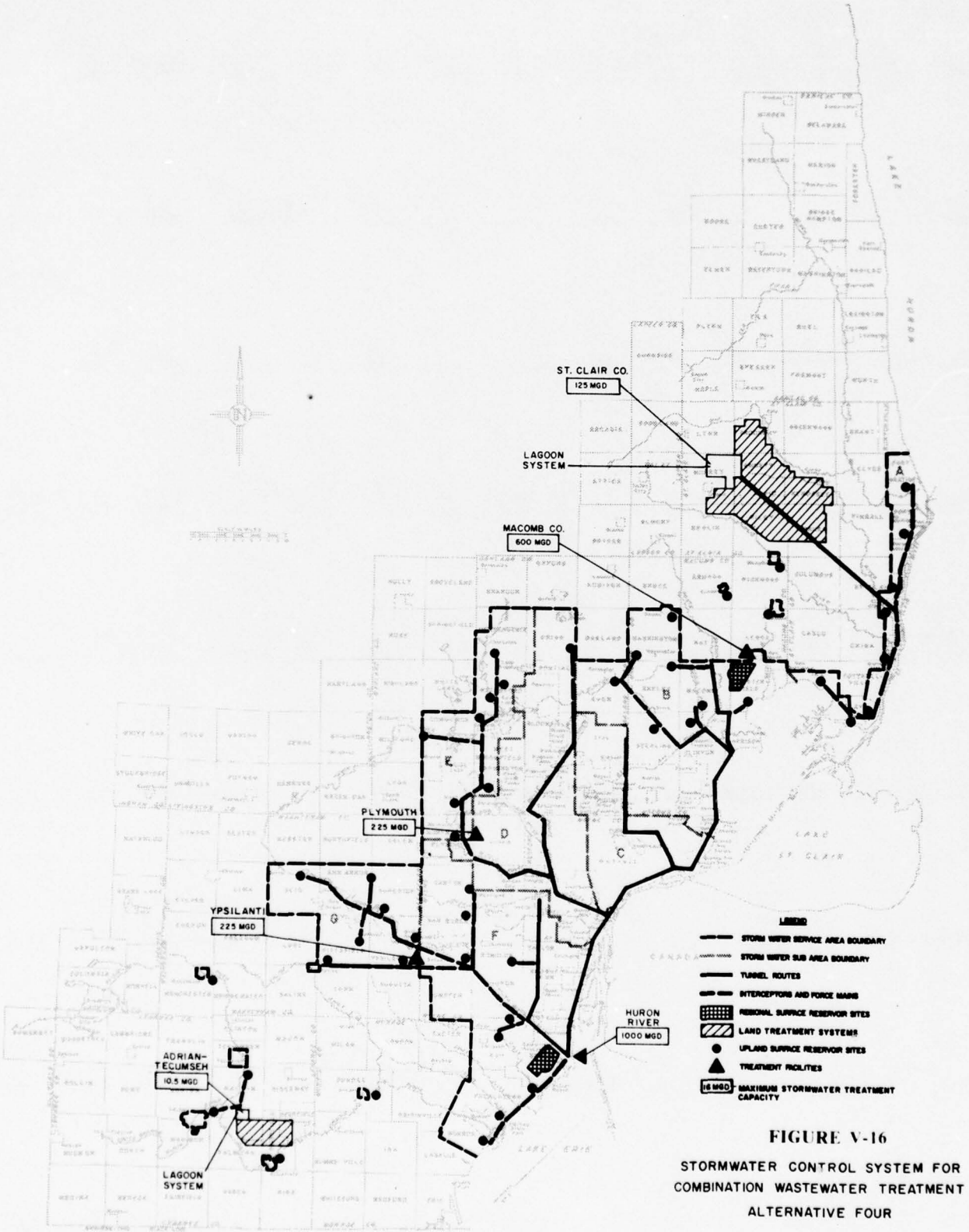

FIGURE V-16

STORMWATER CONTROL SYSTEM FOR COMBINATION WASTEWATER TREATMENT ALTERNATIVE FOUR

TABLE V-51

COMBINATION WASTEWATER TREATMENT ALTERNATIVE FOUR

	DESIGN TREATMENT CAPACITY		COMBINATION PROCESSES				ULTIMATE SOLIDS DISPOSAL
	STORM RUNOFF (MGD)	MUNICIPAL-INDUSTRIAL (MGD)	SEWAGE SLUDGE INCINERATION (Ton/Day)	LIME SLUDGE RECALCINATION (Ton/Day)	ACT. CARBON REGENERATION (Ton/Day)	SANITARY LANDFILL (Ton/Day	LAND APPLICATION (Ton/Day)
Port Huron Plant	--	24 AWT	--	--	3	45	--
Macomb Co. Plant	600 IPCT	--	--	1226	75	72	--
Detroit Plant	--	806 AWT	--	895	100	862	--
Plymouth Plant	225 IPCT	--	--	600	28	31	--
Ypsilanti Plant	225 IPCT	--	--	600	28	31	--
Wyandotte Plant	--	125 AWT	274	1 39	16	81	--
Huron River Plant	1000 IPCT	--	--	2043	125	119	--
Monroe Plant	--	40 AWT	28	--	5	47	--
Lenawee Co. Land Site	10.5 Land	36 Land	--	--	--	2	10
Monroe Co. Land Site	--	201 Land	--	--	--	42	130
St. Clair Co. Land Site	125 Land	187 Land	--	--	--	58	248

TABLE V-52

SUMMARY COST SHEET

COMBINATION WASTEWATER TREATMENT ALTERNATIVE FOUR

	Construction Cost Million Dollars	Amortized Construction Cost Million Dollars	Amortized Replacement Cost Million Dollars	Annual Operation and Maintenance Million Dollars	Total Annual Treatment Cost Million Dollars
M&I PLANTS					
Detroit (AWT)	376.70	22.239	.557	35.720	58.724
Monroe (AWT)	31.63	1.869	.077	2.880	4.826
Port Huron (AWT)	16.87	.996	.049	1.808	2.803
Wyandotte (AWT)	68.10	4.024	.186	8.156	12.366
STORMWATER PLANTS					
Macomb Co. (IPCT)	181.50	10.725	.197	8.312	19.234
Plymouth (IPCT)	73.80	4.361	.095	3.346	7.802
Ypsilanti (IPCT)	73.80	4.361	.095	3.346	7.802
Huron River (IPCT)	290.40	17.154	.303	13.165	30.622
LAND TREATMENT SYSTEMS					
St. Clair Co. Lagoon & Sludge Disposal	66.28	3.915	.432	4.603	8.950
St. Clair Co. Irrigation System	127.68	7.541	--	5.178	12.719
Monroe Lagoon System & Sludge Disposal	71.88	4.245	.331	4.018	8.594
Monroe Irrigation System	122.60	7.241	--	4.292	11.537
Lenawee Lagoon System & Sludge Disposal	13.38	.790	.026	.358	1.174
Lenawee Irrigation System	22.89	1.352	--	.764	2.116
TREATMENT PLANT SLUDGE LANDFILL					
St. Clair Co. Site	6.60	.390	.083	1.034	1.507
Lenawee Co. Site	14.20	.839	.123	1.764	2.726
INTERCEPTION & TRANSMISSION LINES					
Marysville to Port Huron	3.42	.202	--	.032	.234
Macomb Co. to St. Clair Co. Lagoon	47.44	2.802	.073	.985	3.860
St. Clair Co. to Lagoon Site	73.24	4.326	.409	1.323	6.058
St. Clair Co. Land Site Distribution	16.07	.949	.123	.120	1.192
Detroit System	33.78	1.995	--	--	1.995
Huron River System	157.55	9.305	--	.741	10.046
Huron River to Lagoon Site	35.69	2.108	.074	.877	3.059
Monroe Lagoon to Lenawee Co.	10.52	.621	.019	.157	.797
Lenawee Co. System	5.26	.311	.008	.044	.363
Monroe-Lenawee Return	43.63	2.577	--	.037	2.614
St. Clair Co. Return	22.11	1.306	--	.027	1.333
STORMWATER COLLECTION AND STORAGE SYSTEM	2561.62	151.290	--	6.422	157.712
TOTAL SYSTEM COSTS	4568.46	269.834	3.260	109.721	382.815

components within these systems can be found in other portions of this appendix as specified below.

1. M&I Plants - Tables A-24, A-10, A-9, and A-14.
2. Stormwater Plants - Tables B-27, B-26, B-26, and
3. Lagoon Treatment Systems - Tables C-3, C-6 and C-7.
4. Land Irrigation Treatment Systems - Tables IV-55, D-5 and D-6.
5. Sludge Landfill - Table F-11.
6. Interception and Transmission Lines - Tables IV-3 and IV-4 (Systems 4, 15, 20, 25, 27, 29, 36, 42, 46 & 48).
7. Stormwater Collection and Storage - Table IV-56.

Resource Requirements - Land requirements for this alternative are presented in Table V-53. The major land use requirements would be shared by land treatment facilities and stormwater storage facilities. More land would be required for irrigation in this alternative than in the third combination alternative. More land would also be required for land disposal of sludge from treatment lagoons.

The chemical and energy requirements for this alternative, as presented in Table V-54, vary greatly because of the numerous treatment methods and processes being used. A comparison of the energy and chemical requirements shows the affect that the increase in the amount of land treatment in this alternative has over the third combination alternative. Both peak and electrical power for this alternative would increase due to an increase in pumping required to transport wastewater to irrigation sites. Chemical and fuel requirements, with the exception of diesel fuel, would be reduced because of the reduction of wastewater being treated in plants.

The manpower estimate is presented in Table V-55. As in other alternatives containing land treatment systems, labor estimates do not include manpower estimates for farming operations at land treatment sites.

TABLE V-53

LAND USE SUMMARY

COMBINATION - 4

Facility	Land (acres)	Land Use
Port Huron Plant	38*	Wastewater Treatment Plant
St. Clair Co. Land Site	5,518	Wastewater Treatment Storage Lagoons
	6,570	Land Application of Sewage Sludge
	58,066	Land Irrigation of Treated Wastewater
Macomb Co. Plant	160	Stormwater Treatment Plant
Plymouth Plant	85	Stormwater Treatment Plant
Ypsilanti Plant	85	Stormwater Treatment Plant
Detroit Plant	320*	Wastewater Treatment Plant
Wyandotte Plant	100*	Wastewater Treatment Plant
Huron River Plant	220	Stormwater Treatment Plant
Monroe Plant	50*	Wastewater Treatment Plant
Monroe Land Site	5,518	Wastewater Treatment and Storage Lagoons
	6,570	Land Application of Sewage Sludge
	41,040	Land Irrigation of Treated Wastewater
Lenawee Co. Land Site	465	Wastewater Treatment and Storage Lagoons
	350	Land Application of Sewage Sludge
	9,065	Land Irrigation of Treated Wastewater
St. Clair Co. Landfill	1,157	Sanitary Landfill of Chemical and Sewage Sludges, Waste Ash and Storm Solids
Lenawee Co. Landfill	3,742	Same as Above
Storm Collection & Storage System	23,500	Underground and Surface Storage Facilities For Urban Storm Runoff
TOTAL	162,619	

*In addition to existing plant site

TABLE V-54
ENERGY AND CHEMICAL REQUIREMENTS
COMBINATION WASTEWATER TREATMENT ALTERNATIVE FOUR

	ELECTRICAL POWER		CHLORINE		LIME		METHANOL	NATURAL GAS	FUEL OIL	DIESEL FUEL
	Peak MW	Average MW	Maximum T/D	Average T/D	Maximum T/D	Average T/D	Average T/D	Average MCF/D*	Average 100 G/D	Average GAL/D
Detroit	131.0	131.0	30.0	30.0	633	633	117.7	8090	605.5	871
Monroe	7.4	7.4	1.5	1.5	36	36	4.0	1534	59.2	45
Port Huron	4.6	4.6	0.9	0.9	20	20	3.5	123	6.0	36
Macomb Co.	30.0	9.4	175.0	51.0	425	123	--	2036	145.2	45
Plymouth	12.0	3.8	28.0	8.1	160	46	--	975	69.6	30
Ypsilanti	12.0	3.8	28.0	8.1	160	46	--	975	69.6	30
Huron River	48.0	15.2	292.0	85.0	708	205	--	3071	219.5	84
Storm Collection & Storage System	1868.5	43.4	--	--	--	--	--	--	--	1600
Wyandotte	22.0	22.0	4.6	4.6	98	98	18.3	2871	204.9	77
St. Clair Co. Lagoon System	30.0	25.0	23.1	12.9	--	--	--	--	--	420
St. Clair Co. Irrigation	29.8	16.7	--	--	--	--	--	--	--	--
Monroe Co. Lagoon System	23.2	19.3	19.6	13.0	--	--	--	--	--	460
Monroe Co. Irrigation	53.0	26.5	--	--	--	--	--	--	--	--
Lenawee Co. Lagoon System	2.2	1.8	1.1	0.6	--	--	--	--	--	--
Lenawee Co. Irrigation	7.7	3.7	--	--	--	--	--	--	--	--
Transmission Systems	51.0	19.7	--	--	--	--	--	--	--	--
TOTAL	2332.4	353.3	603.8	215.7	2240	1207	143.5	19,675	1379.5	3698

* MCF = 1,000 Cubic Feet

TABLE V-55

MANPOWER REQUIREMENTS

COMBINATION WASTEWATER TREATMENT ALTERNATIVE FOUR

	Superintendents & Supervisors	Foremen	Operators	Electricians	Maintenance Mechanics	Laboratory Technicians	Laborers	Other	Total Manpower
Port Huron	4	4	40	3	7	5	14	1	78
Macomb Co.	6	24	115	12	19	9	60	8	253
Detroit	23	128	704	64	80	46	300	19	1364
Plymouth	4	10	51	7	9	1	27	5	114
Ypsilanti	4	10	51	7	9	1	27	5	114
Huron River	8	40	191	20	41	15	100	11	426
Monroe	5	9	50	4	9	6	20	3	106
St. Clair Co. Landfill	1	2	17	--	--	--	1	1	22
Lenewee Co. Landfill	1	3	33	--	--	--	2	1	40
Conveyance Systems	1	7	16	10	10	--	21	--	65
Storm Collection & Storage System	2	10	50	--	--	--	20	--	82
Wyandotte	8	24	113	10	14	8	50	5	232
St. Clair Land Site	2	9	30	9	9	5	30	1	95
St. Clair Co. Lagoon Site	2	7	16	7	7	6	19	1	65
Monroe Co. Land Site	2	6	21	6	6	3	21	1	66
Monroe Co. Lagoon Site	2	6	13	6	6	5	16	1	55
Lenawee Co. Land Site	.5	2	4	1	2	.5	5	--	15
Lenawee Co. Lagoon Site	.5	--	2	--	--	.5	3	--	6
Total Manpower	76	301	1517	166	228	111	736	63	3198

TECHNICAL EVALUATION

SUMMARY OF ALTERNATIVES

Eleven alternatives were developed and proposed for wastewater management in Southeastern Michigan. The water quality objective of each alternative was to approach, within the limits of available technology and engineering reason, the 1985 "no discharge of pollutants" goal of Public Law 92-500. In the following paragraphs, these alternatives are compared in areas other than water quality, such as: sludge handling and disposal methods, economic costs, land requirements, chemical and energy demands, and manpower requirements. The disadvantages and advantages of each alternative are different within these areas.

Sludge Handling and Disposal

Various sludge handling and disposal methods can be applied to any of the water treatment methods. Incineration followed by landfill, landfill of dewatered sludge, and land spreading of sludges have all been proposed in at least one alternative. Two alternatives, AWT-2 and IPCT-3, have been created by changing the sludge handling and disposal methods in the AWT-1 and IPCT-2 alternatives. The object was to identify the impacts and trade-offs involving energy consumptions, air emissions, and land use.

Incineration significantly reduces the volume of the sludge, produces a stable sterile ash, results in land savings, and reduces hauling costs. These benefits have made sludge incineration favorable in Southeastern Michigan in the past. Large energy requirements, stiffening air pollution control regulations, and the accompanying increase in costs, however, may make it desireable to consider alternative methods in the future.

Landfilling or land spreading of non-incinerated sludge would require large amounts of land compared to the landfilling of incinerated sludge and the cost of the additional land is generally less than the increased energy requirements. There is land in Southeastern Michigan which could be used for this purpose but whether it could be obtained and set aside is questionable. The demand for land by other interests and the large amount of land needed are significant factors which may override any economic benefits.

Economic Costs

Table VI-1 presents the economic costs of the eleven proposed alternatives for wastewater management in Southeastern Michigan. The annual costs range from a low of 346.6 million dollars for IPCT Alternative Three to a high of 523.8 million dollars for Land Alternative One.

Nine of the alternatives fall into an annual cost range of 346 to 383 million dollars. Within this range, the difference in economic costs among the alternatives may become an insignificant factor in the selection of one as being more favorable than the others. The land treatment alternatives have total annual costs of 431.4 and 523.8 million dollars. These higher total annual costs may, however, be significant factors in the selection or elimination of the land alternatives.

Annual operation and maintenance costs comprise about one third of the total annual costs. In some cases the major portion of the difference in the total annual costs between two alternatives can be found in the operation and maintenance costs. The decision to be made in these cases would involve a trade-off between non-economic benefits and economic costs.

Land Requirements

Table VI-2 presents the land use requirements for the eleven

TABLE VI-1

SYSTEM COSTS SUMMARY

	Construction Cost Million Dollars	Amortized Construction Cost Million Dollars	Amortized Replacement Cost Million Dollars	Annual Operation and Maintenance Million Dollars	Total Annual Treatment Cost Million Dollars
AWT Alternative One	4,237	250.2	2.3	117.6	370.1
AWT Alternative Two	4,244	250.7	2.6	121.4	374.7
IPCT Alternative One	4,263	251.6	5.1	119.1	375.8
IPCT Alternative Two	4,040	238.6	5.6	113.5	357.7
IPCT Alternative Three	3,987	235.5	3.0	108.1	346.6
Land Alternative One	6,028	358.4	10.4	155.0	523.8
Land Alternative Two	5,507	325.8	4.8	110.4	441.0
Combination Alternative One	4,175	246.6	3.7	114.8	365.1
Combination Alternative Two	4,189	247.4	3.6	117.7	368.7
Combination Alternative Three	4,262	251.7	3.8	118.0	373.5
Combination Alternative Four	4,568	269.8	3.3	109.7	382.8

alternatives. Land use is divided into three general categories: stormwater collection and storage, wastewater treatment, and sludge disposal. These categories are divided further for more detailed comparisons. In all alternatives the stormwater storage facilities require significant amounts of land and since this value remains constant it is not reflected in the comparisons of raw number of acres.

For those alternatives which do not use land irrigation for treatment, the main factors which influence the amount of land required are the method of handling sludge, the number of plants, and the treatment technology employed. Other factors such as the number of plants and the types of plants proposed are also significant. Larger plants require fewer acres per million gallons of wastewater treated than do smaller plants. Advanced wastewater treatment plants have more equipment and therefore require more land than independent physical chemical treatment plants of the same capacity.

Since land irrigation requires a large amount of land for each million gallon of wastewater treated in a day, the amount of land required for each alternative which utilizes land irrigation is primarily determined by the portion of the total wastewater flow being applied to the land. In a land system, the sludge which accumulates in the waste treatment lagoons is disposed of by land spreading. Land spreading of sludge also imposes significant land use requirements that are proportional to the amount of water being treated by a land system.

When ranking the eleven alternatives according to land use requirements, the IPCT alternatives require the least, followed by the AWT and non-land combination alternatives, with alternatives employing land irrigation requiring the greatest amount of land.

Chemical and Energy Requirements

Table VI-3 presents the resource demands for the eleven alternatives.

TABLE VI-2
LAND USE REQUIREMENTS SUMMARY

	STORMWATER CONTROL		WASTEWATER TREATMENT				SLUDGE DISPOSAL		
	Upland Storage Acres	Regional Storage Acres	Aerated Lagoons Acres	Storage Lagoons Acres	Irrigation System Acres	Treatment Plants Acres	Sanitary Landfill Acres	Landfill Acres	Surface Spreading Acres
AWT Alternative One	17,080	6,420	--	--	--	1,382	3,850	2,637	--
AWT Alternative Two	17,080	6,420	--	--	--	1,382	--	3,201	--
IPCT Alternative One	17,080	6,420	--	--	--	970	--	3,431	--
IPCT Alternative Two	17,080	6,420	--	--	--	897	--	3,528	--
IPCT Alternative Three	17,080	6,420	--	--	--	897	13,950	1,841	--
Land Alternative One	17,080	6,420	2,751	68,850	597,530	--	34	1,960	41,442
Land Alternative Two	17,080	6,420	1,264	36,912	313,128	550	34	2,198	41,442
Combination Alternative One	17,080	6,420	--	--	--	1,213	2,443	2,890	--
Combination Alternative Two	17,080	6,420	--	--	--	1,288	2,400	3,165	--
Combination Alternative Three	17,080	6,420	101	2,590	23,740	1,188	2,280	3,152	700
Combination Alternative Four	17,080	6,420	396	11,105	108,171	1,058	2,365	2,534	17,041

TABLE VI-3
RESOURCE DEMANDS SUMMARY

	ELECTRICAL POWER DEMAND		FOSSIL FUEL HEAT	LAND	CHEMICALS			OPERATING MANPOWER
	Peak	Average			Lime	Chlorine	Methanol	
	MW	MW	MM BTU	Acres	T/D	T/D	T/D	Men
AWT Alternative One	2,215	314	23,672	31,369	1,574	201	206	3,728
AWT Alternative Two	2,218	317	36,182	28,083	1,556	201	206	3,744
IPCT Alternative One	2,092	194	31,162	27,901	1,480	892	--	2,218
IPCT Alternative Two	2,053	153	31,057	27,925	1,498	892	--	2,293
IPCT Alternative Three	2,034	141	7,136	40,188	2,760	892	--	2,436
Land Alternative One	4,098	1,142	548	736,067	--	117	--	1,775*
Land Alternative Two	2,849	544	7,619	418,728	420	236	--	2,083*
Combination Alternative One	2,154	254	25,885	30,046	1,605	475	125	3,131
Combination Alternative Two	2,166	266	27,394	30,353	1,570	414	144	3,283
Combination Alternative Three	2,184	269	24,180	57,251	1,492	395	125	3,227*
Combination Alternative Four	2,332	353	20,192	162,619	1,207	217	144	3,424

* Does not include Manpower associated with farming operations.

TABLE VI-4
SUMMARY OF MANPOWER REQUIREMENTS

	Superintendents & Supervisors	Foremen	Operators	Electricians	Maintenance Mechanics	Laboratory Technicians	Laborers	Other	Total Manpower
AWT Alternative One	87	343	1883	166	235	127	810	77	3728
AWT Alternative Two	87	345	1898	166	235	127	809	77	3744
IPCT Alternative One	39	200	1036	111	177	68	533	54	2218
IPCT Alternative Two	52	203	1971	117	172	71	541	66	2293
IPCT Alternative Three	52	195	1198	113	175	71	563	69	2436
Land Alternative One	45	174	554	172	172	80	559	19	1775*
Land Alternative Two	53	200	787	157	179	85	580	42	2083*
Combination Alternative One	68	281	1554	146	206	103	702	71	3131
Combination Alternative Two	76	300	1631	152	215	108	727	74	3283
Combination Alternative Three	74	299	1588	155	212	106	725	68	3227*
Combination Alternative Four	76	301	1517	166	228	111	736	63	3198*

*Total does not include manpower required for farming operations

Chemical and energy requirements, land requirements, and manpower requirements are summarized.

Chemical demands are divided into the three types which are most commonly used: lime, chlorine, and methanol. Because the AWT and IPCT processes are different, variable amounts of lime will be used. Lime requirements are also dependent upon how much lime would be recalcined. When used lime is not recalcined, more new lime is required and also more land is required for landfill areas. The recalcination process results in less land but requires fossil fuel to provide heat and additional energy for air pollution control.

Chlorine is used in all alternatives for disinfection. Whenever IPCT treatment is used, additional chlorine demands are incurred due to the break-point chlorination process employed for ammonia removal. Methanol is used only in the AWT process, specifically for denitrification. During the AWT process ammonia nitrogen is changed to nitrate or nitrite nitrogen. Although this new step is created it eliminates chlorine addition for ammonia removal. Land systems have minimal requirements of chemical and are well below the requirements of other systems.

Fossil fuel heat demands would include incineration fuel, fuel for trucks hauling to landfills, maintenance fuel, and fuel for heating buildings. The major portion of the fuel requirements would come from the incinerators and recalcinators. Therefore, Land Treatment Alternative One would have the lowest fuel demand since it has no incineration or recalcination facilities. The remaining alternatives would have varying demands proportional to the amount of incineration and recalcination proposed.

Electrical power demands can be in two significant forms, peak and average. The peak power demands in all cases are primarily a result of stormwater pumping requirements. The two peak demands which stand out, those from Land-1 and Land-2, are high because the average demands are

high. Transportation of wastewater to the lagoon treatment sites and then to the land irrigation sites requires major pumping facilities operating on a continuous basis.

The average electrical power demand for alternatives without land irrigation systems is primarily for raw waste pumping, lighting and operation of process equipment. The major difference in electrical power demand between the AWT and IPCT systems can be attributed to the extensive use of aeration in the AWT process.

Manpower Requirements

The manpower requirements for the eleven alternatives are presented in Table VI-4. Estimates of total manpower as well as estimates for different categories of labor have been developed.

The number of superintendents and supervisory personnel required for an alternative is basically a function of the number of plants involved. In a large regional system with a few large plants and a minimal amount of small plants, supervisory and laboratory personnel can be held to a minimum.

Requirements for maintenance personnel are a function of the amount of mechanical equipment employed in a plant. Operational personnel requirements are determined by both the amount of mechanical equipment employed and the degree of instrumentation of the plant. AWT plants require more operation and maintenance personnel than an IPCT plant of equivalent capacity since the IPCT plant would require less equipment and its processes are more adaptable to instrumental control.

Lagoons and land irrigation systems have fewer and less sophisticated mechanical systems to maintain. Operational personnel requirements reported for land systems do not include manpower which would be necessary for farming operations since farm operation would be on a contract basis and would be self supporting.

INTERIM WATER QUALITY ALTERNATIVE

A wastewater management alternative to meet the water quality standards of the State of Michigan was developed for comparison purposes. Most of the information used in the development process came from the Michigan Water Resources Commission Phase II Plan for Southeastern Michigan. It is identified as an interim plan because the level of treatment is less than that proposed for the alternatives described earlier in this report and therefore it could meet, at best, the 1983 requirement of "best practicable technology" in Public Law 92-500.

In this plan, 46 wastewater treatment plants in the area would provide treatment of municipal and industrial wastewater, and overflow from the combined sewers. Three regional plants located in Detroit, Wyandotte and at the Huron River would have a total design-treatment capacity of 1420 million gallons per day (MGD). Forty-three minor plants having a total design capacity of 160 MGD would serve communities that are not a part of a regional system. Plant locations can be seen on figure VI-1. Many of the minor plants are considered interim facilities to provide treatment until growth of the community would justify further extension of the regional interceptor system.

The degree of treatment required at a particular plant depends upon the water body into which the plant discharges. Plants which discharge directly to the Saint Clair River, the Detroit River, or Lake Erie would be required to provide an equivalent of secondary treatment and remove a minimum of 80 percent of the phosphorus. Plants discharging to inland streams would be required to provide a higher degree of treatment as shown in Table VI-5.

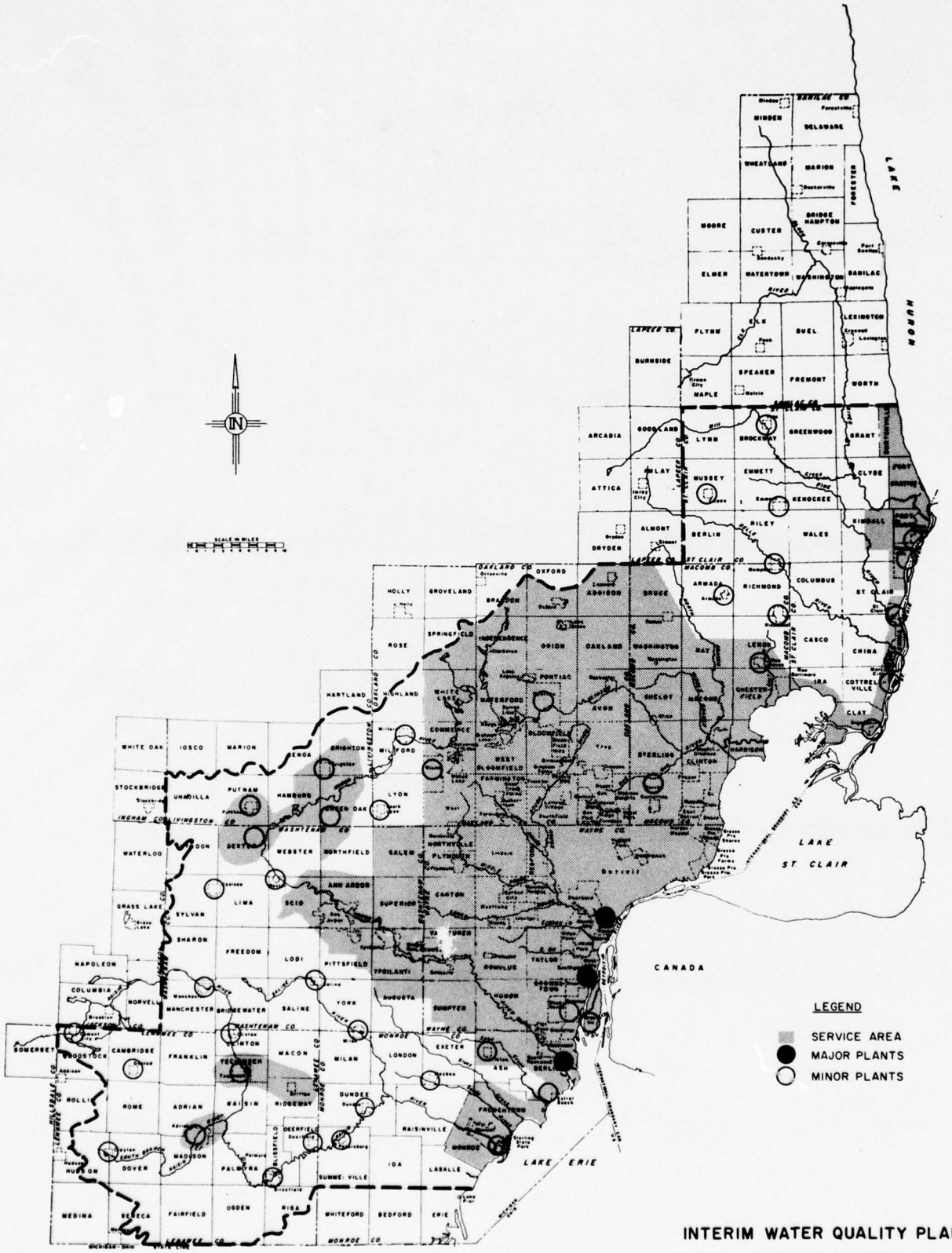

INTERIM WATER QUALITY PLAN

MUNICIPAL, INDUSTRIAL & COMBINED SEWER OVERFLOW WASTEWATER

FIGURE VI-1

Table VI-5

EFFLUENT REQUIREMENTS
FOR PLANTS DISCHARGING TO INLAND STREAMS

5 - Day BOD	4.0 mg/1
Ammonia Nitrogen	0.5 mg/1
20 - Day BOD	8.0 mg/1
DO in the effluent	5.0 mg/1 minimum
Total Phosphorus Removal	80% minimum
Suspended Solids	15.0 mg/1
Fecal Coliform	100/100 ml
Total Coliform	1000/100 ml

Additional interceptors will be required to provide transportation of wastewater being generated from the newly developed portions of the 1990 service area. The Detroit collection system would be expanded to serve developing portions of Macomb and Oakland Counties. Additional interceptors would also be built to relieve overladen portions of the existing combined sewer system most prevalent in older portions of the service area. The collection system which terminates at the Wyandotte plant would remain unchanged since it is not expected to expand and the area it serves is already developed to a large degree. The collection system which would lead to the proposed Huron River Plant would have to be constructed in its entirety. This sewerage system would serve a major portion of the new development in Southeastern Michigan.

The combined sewered systems of Southeastern Michigan contribute a significant pollutant load to the surface waters of the area through bypasses and overflows. To meet the water quality goals of the region, three plans were developed for controlling the combined sewer overflows and limiting the total pollutants discharged to a receiving stream. In each

plan, a specified volume of combined sewer overflows would be stored in numerous facilities constructed throughout the area. These facilities would provide for the retention of floating debris by skimming, chlorination for effective disinfection of the overflows which would occur when the storage capacity is exceeded, and the removal of septic solids buildup deposited by smaller retained storms over an extended period. From storage, the retained stormwater would be reintroduced into the interceptor system at a lower rate and treated at the same facility used to treat the municipal-industrial flow from the area.

The first plan would retain 11.9 acre-feet of runoff per 1,000 acres of drainage area. This storage volume corresponds to approximately .14 inches of runoff over the drainage area. It has been developed from the analysis of an extensive combined sewer area and is considered to be able to limit the combined overflows so that the total pollutants contained therein, discharging to the receiving stream, will be less than from the district if served by separate sewer systems.

Plan I for combined sewer control would collect about 78 percent of the annual overflow volumes to achieve this condition. Plans II and III would collect greater amounts and thus provide a higher degree of pollution abatements. Plan II would provide 34 acre-feet of storage per 1,000 acres of drainage area. This is equivalent to about 0.4 inches of runoff and would result in the retention of 85 percent of the annual overflow volumes. Plan III would provide 87.5 acre-feet of storage per 1,000 acres of drainage area which is equivalent to 1.05 inches of runoff. This system would retain 94 percent of the annual overflow volumes from the existing combined sewer systems.

Sludge Handling and Disposal

Table VI-6 presents the design flows and the sludge handling methods for the larger plants (plants with more than 5 MGD capacity) in the Interim Water Quality Alternative.

TABLE VI-6

SLUDGE HANDLING & DISPOSAL METHODS
INTERIM WATER QUALITY ALTERNATIVE

TREATMENT PLANT	AVG. DESIGN FLOW (MGD)	SEWAGE SLUDGE SOLIDS Ton/Day	TREATMENT PROCESS	ULTIMATE DISPOSAL IN LANDFILL ASH (TON/DAY)	SLUDGE (TON/DAY)
Detroit	1200	924	Incineration	414	—
Huron River	121	93	Incineration	42	--
Wynadotte	100	77	Incineration	35	--
Warren	36	28	Incineration	13	--
Pontiac	30	23	Incineration	10	—
Monroe	24	15	Incineration	5	--
Port Huron	20	23	Incineration	7	--
Algonac	8.26	11	Dewater	--	11
Adrian	7.50	8	Dewater	--	8
Trenton	5.5	4	Incineration	2	--

Sewage sludges in all but two of the plants will be incinerated. Incineration is primarily for volume reduction and stabilization before final disposal in a landfill. The relatively limited availability of landfills near the large urban plants has made this method feasible.

The two plants which will not have incinerators, Algonac and Adrian, will dewater the sludge and landfill it. These plants are fortunate to be in locations where landfill sites are available and are within economic haul distance from the plant. The quantity of sludge produced at these two plants are also small enough that the quantities are not a limiting factor.

System Costs

A breakdown of cost for the State Water Quality Alternative is presented in Table VI-7. The breakdown presents costs for five systems which make up the alternative and include Major Treatment Plants, Minor Treatment Plants, Combined Sewer Relief System, and Municipal-Industrial Interception and Transmission Systems. Further divisions are made within the section to include the cost of individual treatment plants and other facilities at specific locations. Additional cost data for these facilities can be found in the Michigan Water Resources Commission Plans for Water Quality Mangement.

TABLE VI-7

SUMMARY COST SHEET

STATE INTERIM WATER QUALITY ALTERNATIVE

	Const. Cost Million Dollars	Amortized Const. Cost Million Dollars	Amortized Replacement Cost Million Dollars	Annual O & M Million Dollars	Total Annual Treatment Cost Million Dollars
MAJOR PLANTS					
Detroit 1200 MGD	162.0	9.57	.718	12.66	22.95
Huron River 120 MGD	35.8	2.12	.100	1.56	3.78
Wyandotte 100 MGD	-0-	-0-	.162	1.29	1.45
MINOR PLANTS					
Warren	-0-	-0-	.060	.46	.52
Pontiac	8.9	.53	.054	.50	1.08
Monroe	-0-	-0-	.034	.42	.45
Port Huron	-0-	-0-	.045	.37	.42
Algonac	5.2	.31	.043	.17	.52
Adrian	1.3	.09	.035	.17	.30
Trenton	2.3	.13	.026	.14	.30
Others (Less than 5 MGD)	44.5	2.63	.110	.84	3.58
M&I INTERCEPTION & TRANSMISSION					
Huron River System	141.8	8.37	--	--	8.37
North Interceptor East	103.6	6.12	--	--	6.12
North Interceptor West	69.8	4.12	--	--	4.12
Oakland-Macomb Extensions	92.3	5.45	--	--	5.45
Evergreen-Farmington Relief	24.0	1.42	--	--	1.42
IRA-Clay Interceptor	3.7	.22	--	--	.22
COMBINED SEWER RELIEF SYSTEM					
Plan I	408.1	24.10	--	.96	25.06
Plan II	696.3	41.12	--	1.64	42.76
Plan III	1494.6	88.27	--	3.53	91.80
TOTALS					
W/Plan I	1103.3	65.18	1.39	19.54	86.11
W/Plan II	1391.5	82.20	1.39	20.22	103.81
W/Plan III	2189.8	129.35	1.39	22.11	152.85

Three costs are given for the three alternative combined sewer relief systems. The total cost for the entire wastewater management alternative varies depending on the combined sewer relief system selected and therefore three total costs are given.

Resource Requirements

Land Requirements for this alternative have been estimated for expansion of existing facilities, new plants, and landfill requirements

and are shown in Table VI-8. The amount of additional land for minor plants has not been estimated. The stormwater storage requirements have not been specifically defined and therefore no land requirement is available for this portion of the plan. The amount of land required for stormwater facilities would be dependent upon the alternative selected. It can be safely said, however, that the land requirements will be less than 50 percent of the least land requirement of any second stage alternative.

TABLE VI-8
ESTIMATED LAND REQUIREMENTS
STATE INTERIM WATER QUALITY ALTERNATIVE

Facility	Land (Acres)	Land Use
Detroit	50*	Treatment Plant
Huron River	42	Treatment Plant
Wyandotte	17*	Treatment Plant
Warren	--	
Pontiac	7*	Treatment Plant
Monroe	--	
Port Huron	5*	Treatment Plant
Algonac	7*	Treatment Plant
Adrian	3*	Treatment Plant
Trenton	--	
Landfills	650	Landfill of Sludges & Ash

* Land Required for Additional Facilities.

Chemical and Energy requirements are summarized in Table VI-9. Fuel requirements have been estimated more specifically than chemical requirements. The large amount of natural gas and fuel oil is due to the incineration of sludges. Electrical energy would be used primarily for operation of aerators and pumps. Diesel fuel is related to sludge hauling costs. Chlorine was the only chemical requirement that was estimated since various chemicals are being proposed for phosphorus removal. Chlorine is used for disinfection.

TABLE VI-9

ENERGY AND CHEMICAL REQUIREMENTS

STATE INTERIM WATER QUALITY ALTERNATIVE

	Electrical Power MW	Chlorine Tons/Day	Natural Gas MCF/Day	Fuel Oil 100 Gal/Day	Diesel Fuel Gal/Day
Detroit	97	30.0	5450	1760	330
Huron River	11	3.0	1290	204	20
Wyandotte	8.8	2.5	1060	168	30
Warren	3.2	.9	375	74	13
Pontiac	2.8	.75	307	62	6
Monroe	2.3	.60	202	49	5
Port Huron	2.1	.50	297	41	8
Algonac	1.8	.20	24	2	6
Adrian	1.7	.18	22	2	5
Trenton	1.5	.14	51	11	2
	132.2	38.77	9078	2373	425

Manpower Requirements are presented in table VI-10. The manpower estimate has been broken down into various labor categories for a more complete analysis. The estimated work force is considered adequate to operate the plants at the design flows. Overtime work may be required during certain periods when flows increase due to storm runoff.

TABLE VI-10

MANPOWER REQUIREMENTS

INTERIM WATER QUALITY ALTERNATIVE

	SUPERINTENDANTS & SUPERVISORS	FOREMEN	OPERATORS	ELECTRICIANS	MAINTENANCE MACHANICS	LABORATORY TECHNICIANS	LABORERS	OTHER	TOTAL MANPOWER
Detroit	18	97	542	48	60	37	225	13	1040
Huron River	5	14	64	8	10	4	25	6	136
Wyandotte	4	10	51	6	8	3	20	5	107
Warren	2	3	26	3	5	2	7	1	49
Pontiac	2	2	21	3	4	2	6	1	41
Monroe	2	2	19	2	3	2	6	1	37
Pt. Huron	2	2	17	2	3	2	5	1	34
Algonac	1	--	10	1	2	1.5	3	.5	19
Adrian	1	--	10	1	2	1.5	3	.5	19
Trenton	.5	--	10	1	1	1	1	.5	15
TOTAL MANPOWER	37.5	130	770	75	98	56	301	29.5	1497

COMPARISON OF INTERIM WATER QUALITY ALTERNATIVE TO CORPS ALTERNATIVES

Effluent Standards

The most significant technical difference between the Interim Water Quality Alternative and any of the eleven second stage alternatives is the lower level of effluent requirements being proposed in the Interim Water Quality plan. The basis for design and the economic costs of any system are ultimately determined by the effluent requirements to be achieved. It would be expected therefore that the Interim Water Quality Alternative be the most favorable in terms of economic costs. The ultimate question remains, however, can this lower effluent standard result in the desired surface water quality goal for the study area.

The ecological assessment of all of the alternatives, performed by the Institute of Water Research at Michigan State University, indicates that the Michigan plan will have the least overall effectiveness in improving stream conditions and improving the water quality of Lake Erie. They also point out, however, that the difference in effectiveness between all alternatives is not great and major stream improvements can be expected under any of the alternatives. The Michigan stable effluent requirements for plants on inland streams and the second stage effluent criteria are compared for common parameters in Table VI-11.

Table VI-11

COMPARISON OF EFFLUENT REQUIREMENTS FOR STREAMS

	MICHIGAN	CORPS
5-Day BOD	4.0 mg/l	3.0 mg/l
Suspended Solids	15.0 mg/l	1.0 mg/l
Ammonia Nitrogen	0.5 mg/l	0.3-0.5 mg/l
Total Phosphorus as P	80% Minimum Removal	0.1-0.2 mg/l

Michigan effluent requirements for discharge to the Great Lakes and connecting channels are not as restrictive (secondary treatment with 80 percent phosphorus removal). The ecological assessment indicates that under the Interim Water Quality Alternative the limiting phosphorus loading would be exceeded. They feel that this limiting loading must be met if significant biological changes are to occur in the western Lake Erie basin.

VARIATION IN STORMWATER CONTROL CONCEPTS

The stormwater control facilities proposed in the Interim Plan are significantly different from the systems proposed for the second stage alternatives. Since these stormwater systems represent a large portion (almost 50%) of the total economic cost of all of the alternatives it is important to note the concepts developed in each.

The stormwater alternatives designed for the interim plans propose to control the critical combined sewer overflows to a degree that would limit the total pollutants, discharging to the receiving stream, to an amount equal to or less than the amount of pollutants received from the area if it were equipped with separate sewer systems. The amount of pollutants collected by this system would be less than the amount collected by

Table VI-12

ULTIMATE STORAGE CAPACITY OF
STORMWATER SYSTEMS

Systems	Amount of Storage Inches Over Drainage Area
State Plan I	0.14 inches
State Plan II	0.40 inches
State Plan III	1.05 inches
Corps Plan	2.10 inches

the second stage systems. The second stage systems are designed to collect both the combined sewer overflow and the separate sewer runoff from the urban area. As in the municipal-industrial treatment facilities, the Corps proposals would result in a release of a lower level of pollutants. The amount of storage capacity required in the systems is shown in Table VI-12

The treatment methods proposed for stormwater in the interim plan and the second stage plans would be different. The interim plan proposes that the collected combined sewer overflows be reintroduced into the combined sewer system and conveyed to the same treatment plants which treat the normal municipal-industrial flow in the area. During periods when the storage capacity is exceeded, skimming and chlorination would be provided prior to discharge.

Because of the increased amount of storage and corresponding higher volume of water to be treated, separate treatment of stormwater is proposed in non-land treatment second stage alternatives. Once again the desireability of each system would depend on whether the increase in the amount of the total pollutant load removed by the second stage plan would be justifiable. As municipal-industrial wastewater and combined sewer overflows are controlled, urban stormwater runoff will become the major source of pollution from the metropolitan area if it is not also treated.

ECONOMIC COMPARISONS

In the final comparison of the Corps alternatives and an Interim plan, economic costs will be one of the most important factors considered. The cost for the municipal-industrial portion of each alternative is significant because much of the annual cost difference can depend on how much of the existing facilities would be utilized and what the operation and maintenance cost of each system is.

TABLE VI-13

COMPARISON COST SHEET

FOR SECOND STAGE AND INTERIM ALTERNATIVES

System	Construction Costs In Million Dollars	Annual Operation & Maintenance Costs In Million Dollars	Total Annual Treatment Costs In Million Dollars
AWT-1	4,237	117.6	370.1
AWT-2	4,244	121.4	374.7
IPCT-1	4,263	119.1	375.8
IPCT-2	4,040	113.5	357.7
IPCT-3	3,987	108.1	346.6
LAND-1	6,028	155.0	523.8
LAND-2	5,507	110.4	441.0
COMBINATION-1	4,175	114.8	365.1
COMBINATION-2	4,189	117.7	368.7
COMBINATION-3	4,262	118.0	373.5
COMBINATION-4	4,568	109.7	382.8
INTERIM PLAN	2189.8	22.11	152.85

A comparison of annual operation and maintenance costs indicates a very definite advantage exists with the interim plan. The level of sophistication of the second stage alternatives since they have been designed to meet higher effluent quality criteria, necessitates more control and maintenance. In addition, the tertiary treatment processes being proposed for the second stage systems consume large amounts of chemicals and energy. These chemical and energy requirements are not required to maintain the standards proposed for the interim alternative. The end result is a significantly lower total annual treatment cost for the interim alternative.

As of the date of the final writing of this report, a final interpretation has not been made on the effluent requirements set down by the Federal Water Pollution Control Act Amendments of 1972, Public Law 92-500. If, however, at some future date the effluent standards for all treatment

plants do require levels of treatment such as are proposed in the second stage alternatives, would it be more economical to build to meet these standards now rather than convert from facilities which would be built to implement the interim alternative. The answer to this question is important to the overall economic solution of the pollution control problems of an area.

For the Southeastern Michigan area being considered in this study the conversion from the interim plan to a second stage plan would not require an excessive additional economic cost. It is doubtful, however, that the conversion could be accomplished within the 1985 time frame proposed by Public Law 92-500 because of the extensive construction involved in implementing the second stage plans. A major portion of the costs for the interim plan would be for facilities which would be required in a second stage plan. One example of such facilities would be the interception system being planned for the area. This interception system would be required for whichever plan is employed.

Conversion to the AWT-1 or AWT-2 alternatives would result in the use of almost all facilities that would be built for upgrading to the interim plan. Since both systems incorporate the primary and secondary treatment processes, little would be lost in the transition. Activated sludge facilities, secondary clarifiers, additional primary clarifiers, and additional pumps are being proposed under each plan.

Conversion to the IPCT-1 alternative after the interim plan had been implemented would result in the waste of economic resources. Since the Detroit plant would be expanded to 1200 MGD in the State plan and abandoned in the IPCT-1 plan the expansion money would be lost. The IPCT-1 alternative is less favorable than most of the other alternatives because it phases out the Detroit plant.

Conversion to IPCT-2 or IPCT-3 from the Interim plan would make use of many of the facilities which were added for upgrading. Some additional expense would be incurred due to the conversion of many of these facilities to house other processes. Aeration facilities would be converted to mixing and flocculation chambers. Alterations would be made to primary clarifiers to provide first stage flocculation, clarification, and recarbonation. Pumping and piping facilities would be changed to meet the proper sequence. In order to keep the plant in operation during this changeover, the conversion process would take place in phases; therefore, temporary facilities would be needed as new processes were being brought on line. These costs would not be significant enough to implement IPCT-2 or IPCT-3, rather than the interim plan, if the higher effluent requirements are not defined or required.

The conversion from the interim plan to Land-1 or 2 could make extensive use of the existing facilities if the wastewater were treated in the secondary treatment plants before being applied to the land. This would eliminate the need for secondary treatment lagoons in the land treatment system. Phosphorus removal would not be necessary at the treatment plants since the phosphorus would be desireable for land application. A cost estimate for a system designed on this concept is presented in the following section.

Since the second stage Combination Alternatives are composites of the pure alternatives discussed in the preceding paragraphs, it is felt that they could be implemented with little problem from the configuration of the interim plan. This also means that little additional economic expense would be expected due to this conversion process.

ADDITIONAL COST INFORMATION

VARIOUS INTEREST RATES

Cost estimates were determined for the second stage alternatives and the Interim Plan based on an interest rate of 5-1/2 percent and a project life of 50 years. This interest rate is the rate at which a regional agency could borrow money from a Federal source. Two additional interest rates were used to estimate costs if the financing were obtained from alternate sources. An interest rate of 7 percent represents a local rate at which States and municipalities can borrow money. The third and final interest rate of 10 percent represents the maximum rate at which an agency might be required to finance. Table VI-14 shows the costs of the second stage and interim alternatives computed at these three interest rates.

ECONOMICS OF ACQUIRING EXISTING FACILITIES

In the regionalization of any wastewater system, existing facilities may be taken over or replaced by a new treatment system. When this happens, two financial considerations involving the local community must be examined; they are: outstanding bonded indebtedness and community reimbursement.

Outstanding Bonded Indebtedness

In the Southeastern Michigan area, as in most metropolitan regions, the management of wastewater treatment facilities is a revenue producing operation. The operating agency may, in addition to other revenues, rely on a municipal and industrial user rates and fees or the establishment of special assessment districts and charges. This revenue may then be used to supplement financing of plant operation and maintenance, partially finance new construction, and repay outstanding bonded indebtedness.

Table VI-14

Summary of Alternative System Costs at Various Interest Rates Over 50 Years.

Costs Calculated at 5½%

	Construction Cost Million Dollars	Amortized Construction Cost Million Dollars	Amortized Replacement Cost Million Dollars	Annual Operation and Maintenance Million Dollars	Total Annual Treatment Cost Million Dollars
AWT Alternative One	4,237	250.2	2.3	117.6	370.1
AWT Alternative Two	4,244	250.7	2.6	121.4	374.7
IPCT Alternative One	4,263	251.6	5.1	119.1	375.8
IPCT Alternative Two	4,040	238.6	5.6	113.5	357.7
IPCT Alternative Three	3,987	235.5	3.0	108.1	346.6
Land Alternative One	6,028	358.4	10.4	155.0	523.8
Land Alternative Two	5,507	325.8	4.8	110.4	441.0
Combination Alternative One	4,175	246.6	3.7	114.8	365.1
Combination Alternative Two	4,189	247.4	3.6	117.6	368.6
Combination Alternative Three	4,262	251.7	3.8	118.0	373.5
Combination Alternative Four	4,568	269.8	3.3	109.7	382.8

Costs Calculated at 7%

	Construction Cost Million Dollars	Amortized Construction Cost Million Dollars	Amortized Replacement Cost Million Dollars	Annual Operation and Maintenance Million Dollars	Total Annual Treatment Cost Million Dollars
AWT Alternative One	4,237	307.0	2.8	117.6	427.4
AWT Alternative Two	4,244	307.5	3.2	121.4	432.1
IPCT Alternative One	4,263	308.9	7.1	119.1	435.1
IPCT Alternative Two	4,040	292.7	6.9	113.5	413.1
IPCT Alternative Three	3,987	288.9	3.7	108.1	400.7
Land Alternative One	6,028	436.8	12.8	155.0	604.6
Land Alternative Two	5,507	399.0	5.9	110.4	515.3
Combination Alternative One	4,175	302.5	4.5	114.8	421.8
Combination Alternative Two	4,189	303.5	4.4	117.6	425.5
Combination Alternative Three	4,262	308.8	4.7	118.0	431.5
Combination Alternative Four	4,568	331.0	4.0	109.7	444.7

Costs Calculated at 10%

	Construction Cost Million Dollars	Amortized Construction Cost Million Dollars	Amortized Replacement Cost Million Dollars	Annual Operation and Maintenance Million Dollars	Total Annual Treatment Cost Million Dollars
AWT Alternative One	4,237	427.3	3.9	117.6	548.8
AWT Alternative Two	4,244	428.1	4.4	121.4	553.9
IPCT Alternative One	4,263	428.6	8.7	119.1	556.4
IPCT Alternative Two	4,040	407.5	9.6	113.5	530.6
IPCT Alternative Three	3,987	402.2	5.1	108.1	514.0
Land Alternative One	6,028	606.0	17.7	155.0	778.7
Land Alternative Two	5,507	553.6	8.2	110.4	672.2
Combination Alternative One	4,175	421.1	6.3	114.8	542.2
Combination Alternative Two	4,189	422.8	6.1	117.6	545.0
Combination Alternative Three	4,262	428.5	6.5	118.0	553.0
Combination Alternative Four	4,568	459.2	5.6	109.7	574.5

The Municipal Finance Commission is a State of Michigan agency directed to preview and sanction all utility bond sales and maintain records of the resulting bonded indebtedness.

The following bonded indebtedness examples are drawn from their records.

The City of Adrian is currently serviced by a wastewater treatment plant which discharges to the Raisin River. This treatment plant is scheduled to be phased out in each of the Detroit District's wastewater management alternatives and to be replaced by either an independent physical-chemical treatment plant (Representative Plan One) or a land irrigation treatment system (Representative Plans Two and Three).

Adrian has two outstanding bonds relating to the operation of its treatment plant. A bond issued in 1950 has an indebtedness of $269,000; while, a bond sold in 1953 has an indebtedness of $2,000. Both bonds are general obligation in nature, and the indebtedness figure is as of 30 June 1973.

Through its authorized agency, the City of Mt. Clemens issued a bond in 1949 for the construction of a treatment plant and sewers. The outstanding indebtedness figure also as of 30 June 1973, on this revenue bond is $369,000. The wastewater management plans developed by the Corps designate the phasing out of this plant, and the service area to be subsequently managed by a regional treatment plant at the present location of the Jefferson Avenue plant in Detroit.

Similar situations exist throughout the study area. The total bonded indebtedness for wastewater related facilities, including sewers and treatment plants, approaches $300 million dollars. Of this amount it has been estimated that at least 40 percent can be directly attributed to treatment plants. This bonded indebtedness figure must be incorporated into the

final system cost when new watewater management alternatives are considered.

Community Reimbursement

The reimbursement of communities for treatment plants being phased out of existence is a sensitive matter. The amount of the reimbursement is difficult to determine depending on existing bonded indebtedness, current assessed value of the facilities, and other factors. One method of determining reimbursement is designated by existing State of Michigan wastewater management legislation.

Act 329, Public Acts of 1966 of the State of Michigan, stipulates that governmental units participating in regional wastewater management plans approved by the State of Michigan's Water Resources Commission are eligible to receive a grant for 50 percent of the existing facilities being phased out and replaced by a regional facility.

The land value and any state or federal grant issued for the construction of the phased out facility is to be deducted from this eligible amount. This Act also stipulates that the grant shall be made only if the regional local agency has entered into an agreement for acquisition of the treatment facilities to be replaced, and applies the grant toward such acquisition.

It is possible that the amount of money a community would receive as reimbursement, under this Act, would not be sufficient to repay the outstanding bonded indebtedness on the phased out facility. Other methods of reimbursement may be desired to eliminate the loss of revenue by the local communities.

LAND IRRIGATION OPTIONS USING PRIVATE LAND

CONCEPT DEVELOPMENT AND IRRIGATION DESIGN

The idea of using land for advanced treatment of wastewater has initially encountered opposition from many people who live and work in the areas which would be affected. Much of the opposition stemmed from the fact that farmers thought that they would be forced to leave their land or at best lose their control of it if a land irrigation treatment system were to be put into operation. An alternative method of land irrigation has been developed with the objectives of (1) renovation of wastewater, (2) rentention of title and control of agricultural land by individual farmers, (3) retention of current agricultural cropping patterns, and (4) increasing agricultural yields.

Toward that end, the Detroit District contracted with a group of crop and soil scientists at Michigan State University. The task given to these scientists was to assemble and interpret data, within their related specialties, to be used in developing land irrigation treatment systems. The area to be investigated included all or parts of twenty-five counties in the southeastern quadrant of Michigan. The counties, listed alphabetically, are:

Arenac	Livingston
Bay	Macomb
Clinton	Midland
Eaton	Monroe
Genesee	Oakland
Gladwin	Saginaw
Gratiot	Sanilac
Hillsdale	Shiawassee
Huron	St. Clair
Ingham	Tuscola
Jackson	Washtenaw
Lapeer	Wayne
Lenawee	

Dow Engineering, Inc., was contracted to engineer irrigation and drainage systems using the data developed by the MSU scientists. Interpretation of the data and development of irrigation systems was a cooperative effort between Dow and the scientists at MSU. It was the task of the Detroit District to develop, from this irrigation information, wastewater management systems for various alternatives.

Irrigation and Drainage Zone Concept

The Southeastern Michigan region, because of past glacial action, has many and varied soils. The crops grown in the region likewise, are many and varied. It would be difficult, therefore, to specify a single application rate and/or a single cropping pattern for the entire Southeastern Michigan region. Land treatment facilities designs, in the past, have attempted to use a single application rate and to apply treated wastewater to large areas with limited understanding of the soil types encompassed and with no regard for the crops that were presently being grown on the land to be used. It could be said that past studies tend to try to adapt the cropping patterns to fit a land treatment system. This has tended to cause widespread non-acceptance of these studies. This study attempts to adapt the land treatment system to fit the area's cropping patterns and varied soil conditions.

The quantity of water which can be conducted through the soil and the expected distribution of irrigation on crops grown are closely related to soil properties. The basic premise was that soil associations would form the basis for development of irrigation zones. Using soil maps prepared as part of the National Soil Survey program as a base, soils were grouped according to the dominant texture of the soil profile and the natural drainage conditions in which the soil was developed.

For the development of irrigation and drainage zones, soil management groups having similar characteristics and topography were classified into

Table VII-1 -- Description of Soil Associations

Soil Association	General Description
D	Nearly level, somewhat poorly drained and poorly drained clay soils. Some soils contain more than 60% clay. In some areas up to 15% of the soils in the association have developed from sand or loamy sand over the clay materials (4/1b and 4/1c soil management groups). In this soil association 95% of the soils have 0 to 6% slopes. Organic soils comprise 2% of the association. The principal soil series in this soil association are Toledo, Paulding, Nappanee, Hoytville and Roselms.
E	Undulating to hilly, well drained and somewhat poorly drained, clay and silty clay soils. In this soil association less than 40% of the soils have 0 to 6% slopes. Organic soils comprise 5% of the association. Wet, mineral soils in depressions and drainageways which are not drainable comprise 10% of the association. The principal Soil series in this soil association are St. Clair and Nappanee.
F	Nearly level, poorly drained and somewhat poorly drained clay and clay loam soils. In some areas up to 10% of the soils have developed from sand to loamy sand over the clay or clay loam material. In Genesee County about 20% of the soils have developed from loam materials (2.5cbA). In this soil association 95% of the soils have 0 to 6% slopes. Organic soils comprise 5% of the association. The principal soil series in this soil association are Hoytville, Nappanee, Pewamo, Sims, Wisner, Blount and Kawkawlin.
G	Undulating to rolling, well drained and somewhat poorly drained clay loam and clay soils. In some areas up to 30% of the soils are deep sands or sand over clay loam or clay. In this soil association more than 55% of the soils have 0 to 6% slopes. Organic soils comprise 5% of the association. Wet, mineral soils in depressions and drainageways which are not drainable comprise 15% of the association. The principal soil series in this soil association are Morley, Blount, Nester, Kawkawlin, St. Clair, Nappanee, Kent and Selkirk.
H	Level, poorly drained to somewhat poorly drained clay loam and loam soils. In the Saginaw Bay Area, 20 to 30% of soils are sandy to sandy loam over clay loam or loam. In this association 95% of the soils have 0 to 6% slopes. Organic soils comprise approximately 5% of the association. Wet, mineral soils in depressions or drainageways which are not drainable comprise less than 10% of the association. The principal soil series in this soil association are Pewamo, Sims, Blount, Kawkawlin, Brookston, Parkhill, Conover and Capac. The principal soil series which have developed from sand to sandy loam over clay loam or loam materials are Brevort, Iosco, Breckenridge and Belding.
I	Nearly level, poorly drained loam and clay loam soils over dense compact till at variable depths. These soils occur mostly in Huron County. About 20% of the association has sandy loam or loamy sand over loam or clay loam with compact till at variable depths below the sandy upper story. In this soil association 95% of the soils have 0 to 6% slopes. Organic soils comprise 2% of the association. Wet mineral soils in drainageways which are not drainable comprise 2% of this association. The principal soil series in this soil association have not been correlated at this time.
J	Nearly level, poorly drained and somewhat poorly drained clay loam and sandy loam or loamy sand over clay loam soils which are limy at the surface. In this soil association 95% of the soils have 0 to 6% slopes. Organic soils comprise less than 5% of the association. Wet, mineral soils in drainageways and depressions which are not drainable comprise less than 10% of the association. The principal soil series in this soil association are Wisner, Thomas Kawkawlin, Essexville, Breckenridge, Belding, Brevort, and Iosco.
K	Rolling to level, well drained and somewhat poorly drained loam and clay loam soils. Up to 35% of the soils have developed from sandy loam, loamy sand, sand, or sand or loamy sand over loam or clay loam. In this soil association approximately 65% of the soils have 0 to 6% slopes. Organic soils comprise less than 10% of the association. Wet, mineral soils in drainageways and depressions which are not drainable comprise 15% of the association. In St. Clair, Sanilac, Huron and Tuscola Counties 60% of the soils have 0 to 6% slopes. In these four counties organic soils and wet, mineral soils in drainageways and depressions comprise approximately 2 and 20% of the association, respectively. The principal soil series in this soil association are Miami, Celina, Marlette, Guelph, Conover, Capac, Londo, Morley, Nester, Owosso and Iosco.
L	Nearly level, somewhat poorly drained and poorly drained loam and clay loam soils. Up to 25% of the soils have developed from sand to sandy loam over loam or clay loam or from loamy sand. In this association 80% of the soils have 0 to 6% slopes. Organic soils comprise 15% of the association. In Sanilac County up to 30% of the soils have developed from organic materials. Wet, mineral soils in drainageways and depressions which are not drainable comprise less than 15% of the association. The principal soil series in this soil association are Conover, Capac, Brookston, Parkhill, Blount, Kawkawlin, Pewamo, Sims, Selfridge and Brevort.

Table VII-1 -- Description of Soil Associations (cont.)

Soil Association	General Description
Mn	Nearly level, somewhat poorly drained and poorly drained sandy loam or loamy sand over loam to clay loam, clay loam and loam soils. The sandy loam or loamy sand over clay loam or loam soils comprise 50 to 80% of this association. The part of this soil association located in the northern part of the area have 95% of the soils with less than 6% slopes. Organic soils comprise 5% of the association. Wet, mineral soils in drainageways and depressions which are not drainable comprise 10% of the association. The principal soil series in the northern part of the soil association are Belding, Brekenridge, Iosco, Brevort, Kawkawlin, Sims, Capac and Parkhill.
Ms	Nearly level, somewhat poorly drained and poorly drained sandy loam or loamy sand over loam to clay loam, clay loam and loam soils. The sandy loam or loamy sand over clay loam or loam soils comprise 50 to 80% of this association. The part of this soil association located in the southern part of the area have 95% of the soils with less than 6% slopes. Organic soils comprise 2% of the association. Wet, mineral soils in drainageways and depressions which are not drainable comprise 5% of the association. The principal soil series in this part of the soil association are Metamora, Corunna, Selfridge, Belleville, Blount, Pewamo, Conover, and Brookston.
N	Undulating to rolling, well drained sandy loam soils. Soils developed in loamy sand or sandy loam over sand and gravel comprise 20 to 30% of this soil association. About 10% of the soils have developed from loam materials. About 65% of the soils have 0 to 6% slopes. Organic soils comprise 15% of the association. Wet, mineral soils in drainageways and depressions which are not drainable comprise 15% of the association. About 2% of the soils are shallow to bedrock. The principal soil series of this soil association are Hillsdale and Boyer. Significant amounts of Oshtemo, Fox, Spinks and Miami also occur in this association.
O	Hilly to undulating, well drained sandy loam, loam and loamy sand soils. The sandy loam soils comprise 25 to 40% of this association. The association contains 25 to 50% of loamy sand soils and 10 to 25% of loam soils. In this association 50% of the soils have 0 to 6% slopes. Organic soils comprise 10% of this association. Wet, mineral soils in drainageways and depressions which are not drainable comprise 15% of the association. The principal soil series of this soil association are Lapeer, Hillsdale, McBridge, Spinks, Boyer, Miami and Marlette.
P	Nearly level, well drained sandy loam and loamy sand over sand and gravel soils. Twenty to fifty percent of the soils have sandy clay loam to clay loam subsoil. Up to 20% of the soils have developed from loam materials. Sand soils comprise 5 to 15% of this soil association. Up to 30% of the soils have developed from sandy loam materials. In this association 75% of the soils have 0 to 6% slopes. Organic soils comprise 10% of the association. Wet, mineral soils in drainageways or depressions which are not drainable comprise 15% of the association. The principal soil series of this soil association are Fox and Boyer. Significant amounts of Miami, Oakville and Hillsdale also occur in this association.
Q	Nearly level, somewhat poorly drained, poorly drained and well drained sandy loam and loamy sand over sand and gravel soils. Areas of this soil association are long and narrow representing old glacial drainageways which may not be drainable. About 95% of the soils have 0 to 6% slopes. Organic soils comprise 2% of the association. The principal soil series in this soil association are Matherton, McGregor, Palo, Sebewa, Ronald, Fox, Newaygo Wasepi, Brady, Gladwin, Gilford, Epoufette, Boyer and Mancelona.
R	Strongly sloping to undulating, well drained loamy sand and sandy loam over sand and gravel soils. Soils developed from loam and sandy loam materials comprise 10 to 20% of this soil association. Up to 25% of some areas of this association have loamy sand over loam soils. About 35% of the soils have 0 to 6% slopes. Organic soils comprise 20% of the association. Wet, mineral soils in drainageways and depressions which are not drainable comprise 15% of the association. The principal soil series in this soil association are Boyer, Spinks, Montcalm, Fox and Metea. Significant amounts of Miami, Hillsdale, McBride, Carlisle and Houghton occur in this association.
S	Nearly level, well drained, somewhat poorly drained and poorly drained loamy sand over sand and gravel soils. In this soil association 95% of the soils have 0 to 6% slopes. Organic soils comprise 2% of this association. Wet, mineral soils in drainageways which are not drainable comprise 2% of the association. The principal soil series in this soil association are Boyer, Wasepi, and Gilford.

Table VII-1 -- Description of Soil Associations (cont.)

Soil Association	General Description
T	Level, somewhat poorly drained and poorly drained loamy sand soils with some well drained sand soils on ridges. This soil association includes the long narrow areas along Lake Huron and Saginaw Bay which are not drainable. Bedrock is near the surface on the east and north sides of Huron County. About 90% of the soils have 0 to 6% slopes. Organic soils comprise 5% of this association. The principal soil series in this soil association are Wainola, Deford, Eastport and new shallow to bedrock series in Huron County which have not been correlated.
U	Nearly level to undulating, well drained, somewhat poorly drained and poorly drained sand and loamy sand soils. About 25% of the soils in this soil association located in St. Clair County have developed from clay. Up to 20% of the soils in this association have developed from sand or loamy sand over loam to clay loam materials. In this association 95% of the soils have 0 to 6% slopes. Organic soils comprise 2% of the association. Wet, mineral soils in drainageways which are not drainable comprise 10% of the association. The principal soil series in this soil association are Oakville, Tedrow, Granby, Spinks, Thetford, Ottawa and Selfridge.
V	Nearly level to undulating, well drained, somewhat poorly drained and poorly drained sand soils. These soils contain spodic horizons which are subsoil accumulations of humus, iron and aluminum. About 20% of the soils have developed from sand over loam to clay materials. Up to 20% of the soils have developed from clay loam or clay materials. In this association 85% of the soils have 0 to 6% slopes. Organic soils comprise 15% of the association. Wet, mineral soils in depressions and drainageways which are not drainable comprise 10% of the association. The principal soil series in this soil association are Rubicon, Graylong, Au Gres, Roscommon and Iosco.
W	Nearly level, somewhat poorly drained and poorly drained sand soils. The somewhat poorly drained soils have spodic horizons. Soils developed in loamy sand over clay loam or clay comprise up to 15% of the association. Well drained sandy soils occur on ridges. About 95% of the soils have 0 to 6% slopes. Organic soils comprise 15% of the association. Wet, mineral soils in depressions and drainageways which are not drainable comprise 10% of the association. The principal soil series in this soil association are Au Gres and Roscommon.
X	Level, poorly drained organic soils. Up to 25% of the soils in some areas of this association are mineral soils which are located between the large organic soil areas. Some organic soils are underlain with mineral soils at 16 to 51 inches. In this association 98% of the soils have 0 to 6% slopes. The principal soil series are Carlisle, Greenwood, Houghton and Rifle.

soil associations. The distribution of soil associations in the southeastern quadrant of Michigan are shown in figure VII-1. The soil associations are indicated by capital letters beginning with "D". They are described in Table VII-1 in alphabetical order.

Land Use and Crops

The next step in developing base data was to estimate existing land use and cropping and to project future land use and cropping. An effort was made to identify and broadly define land units ranging from that which was in actual crop production in 1969 (based on U. S. Census data) to an

estimate of total acreage which could be utilized in a land application system. Using a combination of statistical data and aerial photographic analysis, land use was estimated for each soil association by county. The method and a tabulation of land use within each soil association in each county can be found in the report entitled "Wastewater Irrigation Using Privately Owned Farmland in Southeastern Michigan." Table VII-2 is a summary of that data by county.

The cropping patterns projected were estimated for the condition of the maximum quantity of water that could be applied to each soil association and still maintain maximum crop production. Factors considered relevant were: soil association, location, present and projected trends without irrigation, and projected crop needs by 1985. Projections were broken out by soil association, county and crop (corn, beans, small grains, hay-pasture, or trees).

Wastewater Application Rates

Several factors were considered in determining the quality of wastewater which could be irrigated. Some considerations were: maintenance of aerated soil conditions, the need for periodic drying of the soil to allow recovery of infiltration and permiability rates, the ability of the soil and crops to achieve the desired degree of wastewater renovation, the ability of soils and crops to utilize wastewater nutrients, and the need for drainage.

Estimate of the percentage distribution of each soil management group within each soil association (by county) was combined with the acre inches of water that each management group could receive per year to establish an average rate of water application for each soil association. This is an average application rate for the soil association. It could be a higher or lower rate for an acre of land within the association depending

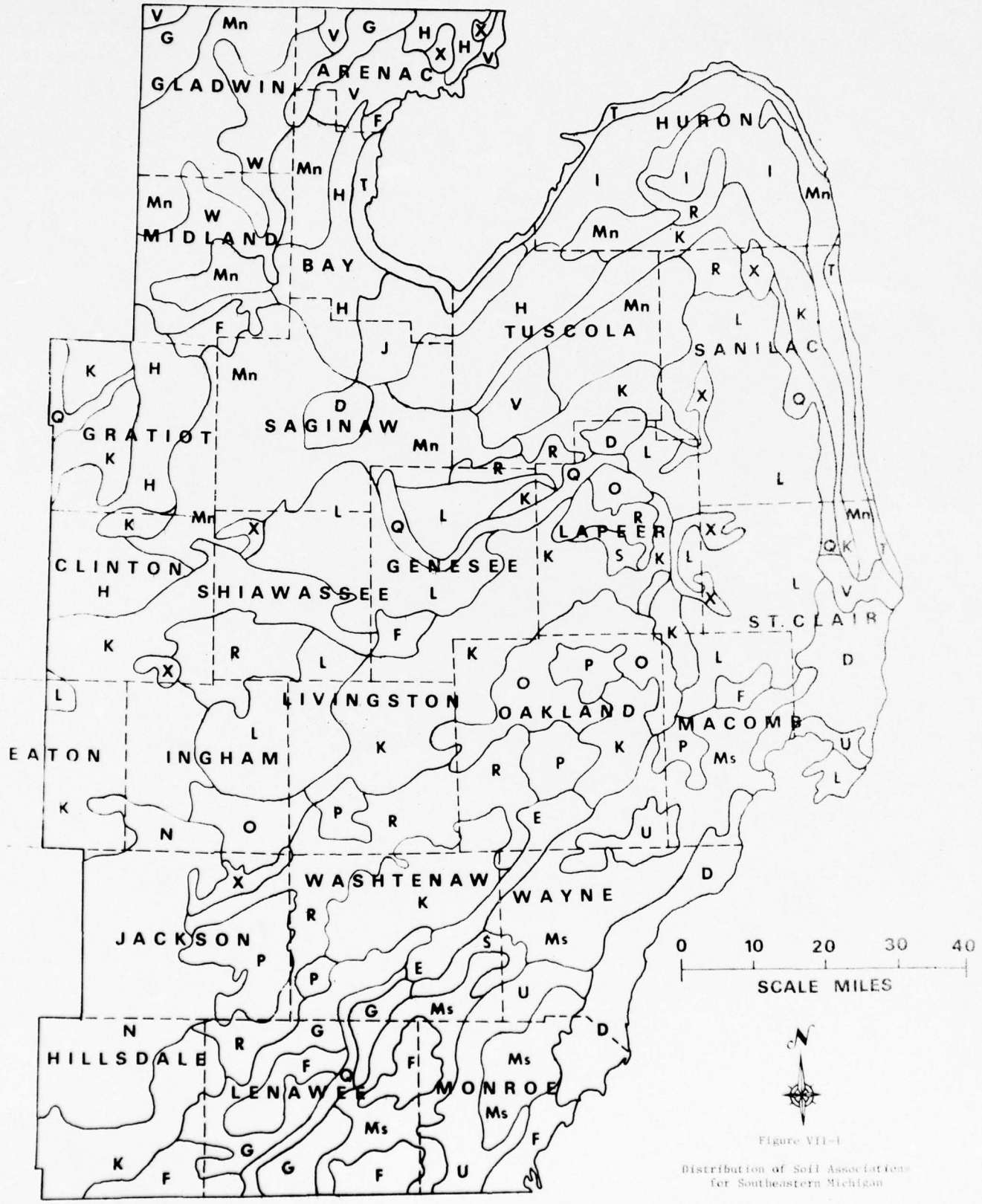

Figure VII-1

Distribution of Soil Associations for Southeastern Michigan

Table VII-2 -Land Use Patterns for Counties in Southeastern Michigan
Adapted from Conservation Needs Inventory, 1968

County	Agriculture Acres (thousands)	%	Forestry Acres (thousands)	%	Urban Acres (thousands)	%	Other Acres (thousands)	%	County Land Area Acres (thousands)
Arenac	114.0	48.5	106.3	45.2	10.7	4.6	4.0	1.7	235
Bay	200.6	70.1	48.3	17.2	19.3	6.8	18.0	6.3	286
Clinton	279.3	76.3	45.0	12.3	20.7	5.6	18.0	4.9	366
Eaton	284.0	77.7	50.2	13.7	21.8	5.6	9.4	2.6	365
Genesee	175.3	42.7	52.0	12.7	131.4	32.0	52.1	12.7	411
Gladwin	113.1	35.1	188.8	58.6	14.5	4.5	5.7	1.8	322
Gratiot	209.9	80.4	50.8	14.0	19.4	5.3	.8	.3	362
Hillsdale	288.5	75.1	64.8	16.9	19.2	5.0	11.7	3.0	384
Huron	433.3	82.7	62.7	12.0	27.8	5.3	.3	.1	524
Ingham	246.5	68.9	53.0	14.8	44.6	12.5	13.6	3.8	358
Jackson	285.8	63.9	96.2	21.5	47.2	10.6	17.6	3.9	447
Lapeer	307.8	73.1	83.8	19.9	17.6	4.2	11.6	2.8	421
Lenawee	377.6	78.4	64.8	13.4	34.8	7.2	4.6	1.0	482
Livingston	237.7	64.9	94.2	25.7	27.1	7.4	7.1	1.9	366
Macomb	147.4	48.0	41.4	13.5	113.0	36.8	5.5	1.8	307
Midland	119.4	37.0	180.7	56.1	24.6	7.4	8.1	2.5	332
Monroe	282	79.1	34.1	9.6	31.7	8.9	8.7	2.5	357
Oakland	185.5	34.1	145.3	26.7	163.8	30.1	49.9	9.2	545
Saginaw	340.6	65.4	97.5	18.7	64.7	12.4	17.9	3.4	521
Sanilac	510.8	83.1	70.4	11.4	26.1	4.2	7.7	1.3	615
Shiawassee	282.3	81.7	37.6	10.9	21.8	6.3	3.7	1.1	345
St. Clair	359.7	76.6	74.5	15.9	27.4	5.8	8.0	1.7	470
Tuscola	374.7	71.8	98.9	19.0	30.9	5.9	17.1	3.3	522
Washtenaw	316.8	69.7	83.5	18.4	48.3	10.6	6.1	1.4	455
Wayne	58.6	15.1	35.4	9.2	287.1	74.7	6.0	1.6	387

upon the soil texture and crop grown. Table VII-3 lists by soil association and by county, the usable land for irrigation, crops grown and average wastewater application rate.

DESIGN OF IRRIGATION AND DRAINAGE FACILITIES

Conceptual Design of WW Treatment Zones

Average wastewater application rates for adjacent soil associations are frequently similar. This made it possible to group soil associations into wastewater irrigation zones. The irrigation zones were formed primarily for identifying irrigation costs. Figure VII-2 shows the boundaries of the irrigation zones. To allow flexibility in using cost data, costs have been identified by counties within each zone. That would allow consideration of an entire zone or county subdivisions of a zone.

In designing the irrigation systems it was necessary to make several design assumptions. They were:

1. Farmers would be allowed freedom in the selection of crops and their rotation for his farm. However, for the purpose of cost estimation and determination of annual wastewater application, the cropping patterns previously presented would be assumed.

2. Each farm would possess an independent irrigation system.

3. Wastewater would have to be applied according to an irrigation schedule. The schedule would not be so restrictive as to hamper farming operations.

4. Within a given irrigation area, nearly all farmers with usable cropland are eventually expected to be recipients of wastewater.

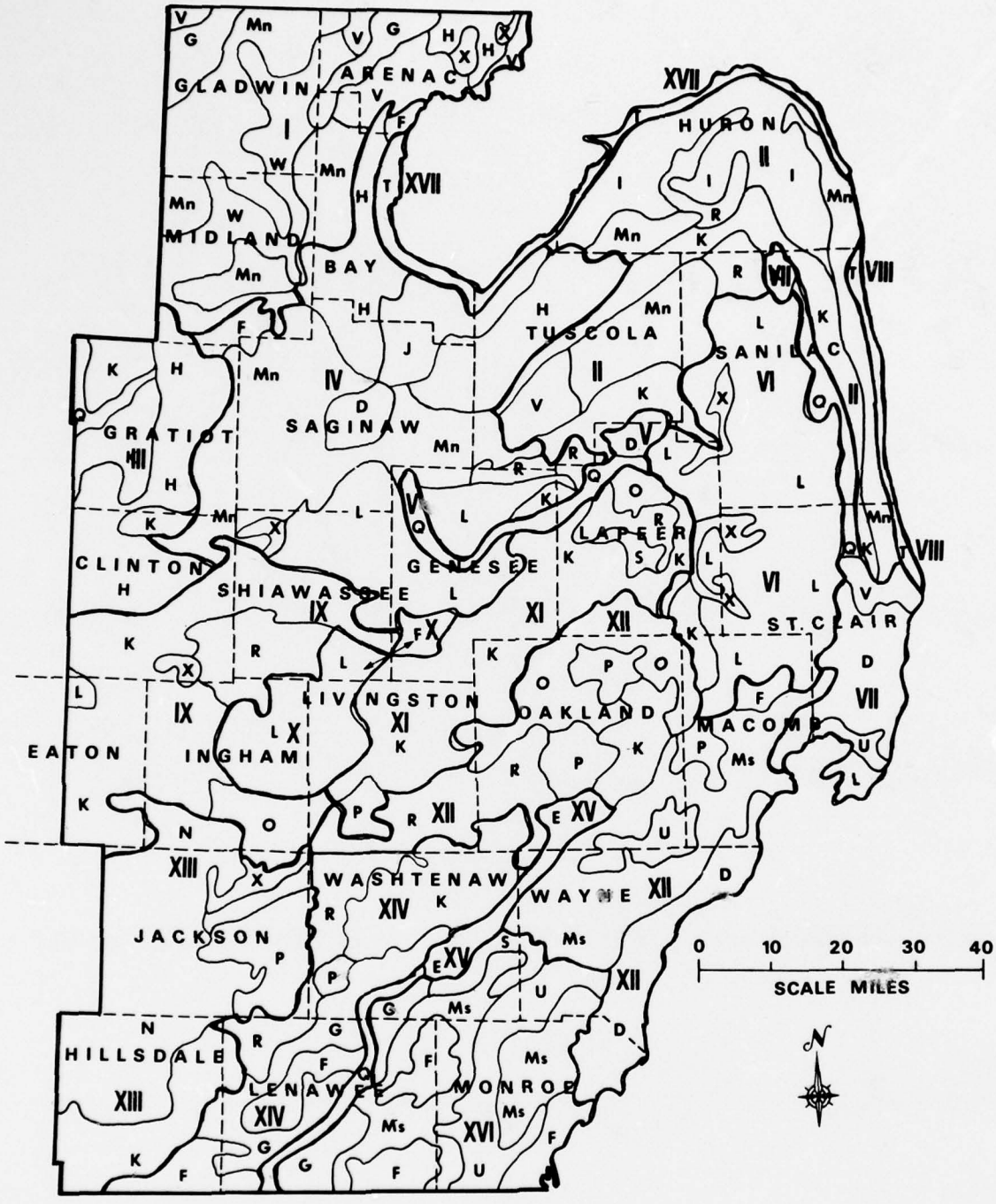

Figure VII-2

Wastewater Treatment Zones
and Soil Associations for
Southeastern Michigan

TABLE VII-3

PROJECTED 1985 CROP DISTRIBUTION WITH IRRIGATION

AND IRRIGATION RATES

Soil Assoc.	Agric. Acres	Percent Usable	Usable Acres	Corn	Beans	Small Grains	Hay Pasture	Trees	Water Application Rate/acre	Water Application Total
	Acres (thousands)	%	Acres (thousands)						Acre inches/year	Acre in/yr (thousands)
Arenac County										
F	11	90	10	6.1	2.0	0	2.0	0	12.5	127
G	28	44	12	7.4	2.5	0	2.5	0	12.5	155
H	30	81	24	8.5	9.8	2.4	3.7	0	17.4	425
M	4.5	81	3.7	.9	1.8	.7	.2	0	18.2	67
V	30	79	24	9.4	9.4	2.4	2.4	0	27.2	642
W	2	73	1.5					1.5	35	53
X	8	0	0							
Total	113.5		76	32	26	5.5	11	1.5		1,470
Bay County										
F	.8	90	.7	.4	.1	0	.1	0	12.5	8
G	3.2	44	1.4	.8	.3	0	.3	0	12.5	17
H	61	81	49	17	20	4.9	7.4	0	18.8	928
J	35	81	28	9.8	11	2.8	4.2	0	18.1	509
M	23	81	19	4.7	9.2	3.8	.9	0	22.5	422
T	15	0	0							
V	4.4	65	2.9					2.9	28.5	82
Total	142		101	33	41	12	13	2.9		1,967
Clinton County										
H	97	81	78	27	31	7.8	12		18.2	1,428
K	104	50	52	31	10	5.2	5.2		22.5	1,167
L	2	58	1.1	.4	.4	.1	.2		23.4	27
M	26	81	21	5.3	11	4.3	1.1		25	536
R	21	24	5	3.8	.5	.5	.2		37.8	193
X	6.6	0	0	0	0	0	0			
Total	256.6		158	68	53	18	19			3,351
Eaton County										
K	85	50	42	25	8.4	4.2	4.2	0	27.4	1,155
L	13	58	7.7	2.7	2.7	.8	1.5	0	23.8	183
N	1.8	46	.8	.4	.1	.1	.2	0	40	32
Total	217.8		51	28	11	5.1	6.0	0		1,371

TABLE VII-3 (Continued)

PROJECTED 1985 CROP DISTRIBUTION WITH IRRIGATION

AND IRRIGATION RATES

Soil Assoc.	Agric. Acres (thousands)	Percent Usable %	Usable Acres	Corn	Beans	Small Grains	Hay Pasture	Trees	Water Application Rate/acre Acre inches/year	Total Acre in/yr (thousands)
			Acres (thousands)							
Genesee County										
F	17	90	15	9.1	3.0	0	3.0	0	15	227
K	46	50	23	14	4.5	2.3	2.3	0	25.9	590
L	60	58	35	12	12	3.5	6.9	0	23.7	825
M	9.6	88	8.5	3.4	3.4	1.7	0	0	20.6	175
R	4.0	23.4	1.0	.7	.1	.1	.05	0	35	33
Q	14	0	0							
Total	301.6		82	39	23	7.5	12	0		1,851
Gladwin County										
G	37	44	16	9.7	3.2	0	3.2	0	17.2	279
M	21	81	17	4.2	8.4	3.4	.8	0	22.1	372
V	4.6	65	3.0					3.0	36.5	109
W	5.2	50	2.6					2.6	33.8	86
Total			39	14	12	3.4	4.0	5.5		846
Gratiot County										
F	3.1	90	2.8	1.7	.6	0	.6	0	12.5	35
H	104	81	84	29	34	8.4	13	0	19.4	1,632
K	104	50	52	31	10	5.2	5.2	0	25.4	1,313
M	46	81	38	9.4	19	7.5	1.9	0	19.0	716
Q	17	0	0							
Total	274.1		176	72	63	21	20	0		3,695
Hillsdale County										
F	33	90	30	18	6.0	0	6.0	0	10.0	291
G	10	44	4.4	2.7	.9	0	.9	0	8.75	39
K	104	50	52	31	10	5.2	5.2	0	25.4	1,309
N	123	46	56	31	5.6	5.6	14	0	38.4	2,163
R	.2	24	.05	.05	0	0	0	0	40	2
Total	270.2		142	82	23	11	26			3,800

TABLE VII-3 (Continued)

PROJECTED 1985 CROP DISTRIBUTION WITH IRRIGATION

AND IRRIGATION RATES

Soil Assoc.	Agric. Acres (thousands)	Percent Usable %	Usable Acres	Corn	Beans	Small Grains	Hay Pasture	Trees	Water Application Rate/acre Acre inches/year	Water Application Total Acre in/yr (thousands)
			Acres (thousands)							
Huron County										
H	1.8	81	1.5	.5	.5	.1	.2	0	18.8	27
I	235	89	210	74	84	21	32	0	15.0	3,155
K	26	50	13	7.7	2.6	1.3	1.3	0	24.4	314
M	59	81	48	12	24	9.6	2.4	0	21.2	1,018
R	51	24	12	9.1	1.2	1.2	.6	0	40.0	486
T	8.8	0	0							
Total	381.6		285	103	113	33	36	0		5,000
Ingham County										
K	56	50	28	17	5.5	2.8	2.8	0	27.4	576
L	81	58	47	16	16	4.7	9.4	0	25.2	1,182
N	31	46	15	8.2	1.5	1.5	3.7	0	38.5	574
O	33	38	12	7.5	2.5	1.2	1.2	0	37.8	470
R	7.4	24	1.7	1.3	.2	.2	.1	0	37.0	65
X	.3	0	0							
Total	208.7		104	50	26	10	17	0		2,867
Jackson County										
K	1.8	50	.9	.5	.2	.1	.1	0	27.4	25
N	117	46	54	30	5.4	5.4	14	0	38.5	2,074
O	6.5	38	2.5	1.5	.5	.2	.2	0	35.8	89
P	39	57	22	12	2.2	2.2	5.6	0	39.8	887
R	5.5	24	1.3	1.0	.1	.1	.1	0	40	52
X	14	0	0							
Total	183.8		81	45	8.4	8.1	19	0		3,237
Lapeer County										
D	12	0	0							
K	40	50	20	12	4.0	2.0	2.0	0	21.9	440
L	56	58	32	11	11	6.5	3.2	0	24.6	793
O	36	38	14	8.3	2.8	1.4	1.4	0	34.8	479
R	21	24	4.9	3.7	.5	.5	.2	0	38.5	189
Q	11	0	0							
S	12	91	11	8.3	1.1	1.1	.6	0	40	442
X	12	0	0							
Total	200.0		82	44	20	11	7.4			2,343

TABLE VII-3 (Continued)

PROJECTED 1985 CROP DISTRIBUTION WITH IRRIGATION

AND IRRIGATION RATES

Soil Assoc.	Agric. Acres	Percent Usable	Usable Acres	Corn	Beans	Small Grains	Hay Pasture	Trees	Water Application Rate/acre	Water Application Total
	Acres (thousands)	%	Acres (thousands)						Acre inches/year	Acre In/yr (thousands)
Lenawee County										
F	106	90	96	58	19	0	19	0	7.5	719
G	112	44	50	30	10	0	10	0	8.1	405
K	7	50	3.5	2.1	.7	.3	.3	0	31.4	109
M	57	88	50	20	20	0	10	0	25.6	1,289
P	.5	57	.3	.2	.03	.03	.07	0	39.8	11
Q	17	0	0							
R	26	24	6.2	4.7	.6	.6	.3	0	40	248
S	15	91	14	10	1.4	1.4	.7	0	25.6	355
Total	340.5		220	125	52	2.4	41	0		3,137
Livingston County										
K	97	50	48	29	9.6	4.8	4.8	0	25.9	1,244
L	49	58	28	9.9	9.9	5.7	2.8	0	25.2	714
O	8.2	38	3.2	1.9	.6	.3	.3	0	37.8	119
P	18	57	10	5.7	1.0	1.0	2.6	0	37	385
Q	.8	0	0							
R	18	24	4.3	3.2	.4	.4	.2	0	38.5	167
Total	191.0		94	50	22	12	11			2,629
Macomb County										
D	7.4	0								
F	17	90	15	9.1	3.0	0	3.0	0	3.8	57
K	9.6	50	4.8	2.9	1.0	.5	.5	0	26.1	125
L	38	58	22	7.8	7.8	4.4	2.2	0	26.9	596
M	32	88	29	11	11	5.7	0	0	20.0	575
O	4.2	38	1.6	1.0	.3	.2	.2	0	34.5	55
P	4.5	57	2.6	1.4	.3	.3	.6	0	37.5	97
Total	112.7		75	34	24	11	6.5	0		1,504
Midland County										
F	20	90	18	11	3.5	0	3.5	0	12.5	221
H	20	81	16	5.5	6.3	1.6	2.4	0	18.8	298
M	36	81	29	7.3	15	5.8	1.5	0	22.1	642
W	21	50	10					10	33.8	344
Total	97		73	23	24	7.4	7.4	10		1,504
Monroe County										
D	38	0	0							
F	15	90	13	7.9	2.6	0	2.6	0	10.0	132
M	86	88	76	30	30	15	0	0	22.5	1,707
U	55	79	44	17	17	4.4	4.4	0	34.0	1,484
Total	194		133	56	50	20	7.0	0		3,323

TABLE VII-3 (Continued)

PROJECTED 1985 CROP DISTRIBUTION WITH IRRIGATION

AND IRRIGATION RATES

Soil Assoc.	Agric. Acres	Percent Usable	Usable Acres	Corn	Beans	Small Grains	Hay Pasture	Trees	Water Application Rate/acre	Water Application Total
	Acres (thousands)	%	Acres (thousands)						Acre inches/year	Acre in/yr (thousands)
Oakland County										
E	6.6	0	0							
K	40	50	20	12	4.0	2.0	2.0	0	25.9	512
M	1.1	88	1.0	.4	.4	.2	0	0	20.0	19
O	36	38	14	8.1	2.7	1.4	1.4	0	38.8	526
P	12	57	6.7	3.7	.7	.7	1.7	0	37.0	249
R	11	24	2.6	1.9	.3	.3	.1	0	38.5	99
U	.4	79	.3	.1	.1	.04	.04	0	37.5	13
Total	107.1		44	26	8.1	4.5	5.2	0		1,418
Saginaw County										
D	29	0	0							
J	12	81	9.7	3.4	3.9	1.0	1.5	0	18.1	176
H	53	81	43	15	17	4.3	6.5	0	18.8	815
L	22	58	13	4.5	4.5	1.3	2.6	0	22.5	291
M	169	81	138	34	69	28	6.9	0	18.6	2,559
Total	285		204	58	95	34	17	0		3,842
Sanilac County										
I	4.0	89	3.6	1.3	1.4	.4	.5	0	12.5	45
K	64	50	32	19	6.4	3.2	3.2	0	24.4	776
L	231	58	134	47	47	27	13	0	25.5	3,405
M	74	81	60	15	30	12	3.0	0	22.5	1,343
R	24	24	5.7	4.2	.6	.6	.3	0	39.2	222
T	16	0	0							
Q	36	0	0							
X	18	0	0							
Total	467		234	86	85	43	20	0		5,790
St. Clair County										
D	68	0	0							
K	9.6	50	4.8	2.9	1.0	.5	.5	0	15.6	74
L	120	58	69	24	24	6.9	13.9	0	20.6	1,428
M	7.2	88	6.4	2.5	2.5	1.3	0	0	22.5	143
T	6.9	0	0							
U	11.5	79	9.1	3.7	3.7	.9	.9	0	27.0	246
V	1.8	65	1.1					1.1	33.8	38
X	17	0	0							
Total	242.0		94	35	33	10	16	1.1		1,930

TABLE VII-3 (Continued)

PROJECTED 1985 CROP DISTRIBUTION WITH IRRIGATION

AND IRRIGATION RATES

Soil Assoc.	Agric. Acres	Percent Usable	Usable Acres	Corn	Beans	Small Grains	Hay Pasture	Trees	Water Application Rate/acre	Total Acre In/yr
	Acres (thousands)	%	Acres (thousands)						Acre inches/year	(thousands)
Shiawassee County										
K	65	50	32	19	6.5	3.2	3.2	0	22.5	728
L	121	58	70	25	25	7.0	14	0	22.5	1,566
R	35	24	8.2	6.2	.8	.8	.4	0	37.8	310
X	9	0	0							
Total	230		110	50	32	11	18	0		2,605
Tuscola County										
H	108	81	88	31	35	8.8	13	0	18.8	1,649
I	1.6	89	1.4	.5	.6	.1	.2	0	12.5	18
J	30	81	24	8.4	9.6	2.4	3.6	0	18.1	435
K	59	50	30	18	6.2	3.1	3.1	0	21.9	657
M	58	81	47	12	24	9.4	2.4	0	22.5	1,063
R	13	24	3.0	2.2	.3	.3	.2	0	32.5	97
T	0									
V	23	65	15					15	37.5	556
Total	296.6		209	72	75	24	23	15		4,472
Washtenaw County										
E	10	0	0							
G	27	44	12	7.2	2.4	0	2.4	0	8.1	98
K	87	50	43	26	8.7	4.3	4.3	0	25.9	1,126
M	20	88	18	7.2	7.2	3.6	0	0	20	361
P	14	57	7.0	4.4	.8	.8	2.0	0	39.8	315
Q	4.4	0	0							
R	60	24	14	11	1.4	1.4	.7	0	34.5	493
S	14	91	12	9.3	1.2	1.2	.6	0	40.0	496
U	8.3	79	6.5	2.6	2.6	.7	.7	0	34.0	222
Total	244.7		115	68	24	12	11			3,111
Wayne County										
D	8.9	0	0							
E	2.4	0	0							
K	.8	50	.4	.2	.2	.08	.08	0	25.9	9.7
M	9.7	88	8.6	3.4	3.4	1.7	0	0	20.0	172
R	3.2	24	.8	.6	.08	.08	.04	0	38.5	29
S	3.0	91	2.7	2.1	.3	.3	.1	0	40.0	109
T	0									
U	12	79	9.3	3.7	3.7	.9	.9	0	34.0	315
Total	40.0		22	10	7.6	3.1	1.2	0		635

5. Facilities to be included in the design would include: a system for distributing wastewater within an irrigation zone, irrigation equipment, a tile drainage system and a collection and discharge system.

Wastewater Distribution Within a Zone

Wastewater distribution systems were designed to convey wastewater from central delivery points within a zone to the individual farms. The distribution systems were sized to accommodate the maximum amount of wastewater needed for a week if that weekly maximum were to be applied in an 80 hour period (five working days, 16 hours per day).

On relatively flat terrain ($s < 0.2\%$ average slope) the distribution system would consist of open channels to serve as mains and pumps and pressure pipe to deliver irrigation water to the farms. On more hilly terrain the distribution system would consist solely of pressure pipe.

Irrigation

Several irrigation methods are suitable for wastewater irrigation including the fixed-set sprinkler system, the center-pivot sprinkler system, and surface irrigation systems such as graded border or ridge and furrow. Following consideration of the advantages and disadvantages of each method, fixed-set and center pivot irrigation were selected as the most suitable for wastewater application in Southeastern Michigan. The fixed-set system was selected primarily because of its low application rates and adaptability to small irrigation areas. The center pivot system was selected for larger areas primarily because of its low capital cost.

Selection of an irrigation system was based on the application rate, size of land area and the soil type. The selected irrigation method and rates of application used in the design of irrigation systems are shown

Table VII-4

Selected Irrigation Method and Application Rate for Soil Management Groups

Soil Management Group	Soil Texture	Suggested Application Rate (In/Hour)	Selected Irrigation Method	Farm Size (Acres)	Selected Application Rate (In/Hour)
1	40-60% Clay	0.05-0.1	None	--	None
1.5	Clay loams	0.1	Fixed-Set	--	0.1
2.5	Loams	0.25	Fixed-Set	--	0.2
3	Sandy loams	0.35	Fixed-Set	--	0.2
3.5	Sand-loam	0.35	Fixed-Set	--	0.2
4	Loamy sands	0.5	Fixed-Set Center Pivot	-s-<250 -s->250	0.2 Variable+
5	Sands	1.0	Fixed-Set Center Pivot	-s-<250 -s->250	0.2 Variable+

+Application rate increases from pivot point to system end.

in Table VII-4. Figure VII-3 shows a distribution and irrigation system for a hypothetical area in Southeastern Michigan.

Collection and Discharge

The primary reason for installation of tile drainage system is to maintain aerobic conditions in the soils. The drainage system would also serve to collect renovated wastewater for possible reuse and/or discharge into adjacent streams.

Tile drains would be placed about six feet beneath the soil surface. That would allow wastewater to be exposed to the maximum practical soil volume before entering the drainage system. Soil permeability was assigned to soil management groups and used to calculate tile spacing (see Table VII-5).

From the tile drainage system, the renovated wastewater would flow by gravity through submains and mains to low head pumps. The collected percolate would be pumped into a canal or pressure pipe for transmission to a reuse pond. The choice of gravity canal or pressure pipe would depend on the terrain. Gravity canals would be used when the average slope of the terrain does not exceed 0.2; and pressure pipes would be used when the average slope exceeds 0.2 or when the watershed drains west toward Lake Michigan or south toward Ohio.

Table VII-5

Selected Soil Permeability for Estimating Tile Drain Spacings

Soil Management Group	Soil Permeability (In./Hour)	Calculated Tile Spacings (Feet)
1.5	0.2	40-45
2	0.2	40-45
3	0.5	60-70
4	1.0	---
5	2.0	125-135

The reuse ponds would be located near the point of discharge to the surface waters. Ponds are sized to retain 10 days of normal flow. A drainage and collection system for a hypothetical area is shown in figure VII-4.

Cost Estimation

The vast areas of land considered under this system made it necessary to use averaging techniques for cost estimation. Cost curves were developed for distribution, irrigation and collection systems. Costs were developed over a range of system sizes and for a range of wastewater application rates.

More specific information on the cost curves and their derivation can be found in the report by Dow Engineering, Inc., titled "Wastewater Irrigation Using Privately Owned Farmland in Southeastern Michigan."

The design data for the different soil associations, previously discussed, is summarized in Table VII-6. This data in addition to average farm sizes and area topography was used to estimate costs for each wastewater treatment zone within each county. A summary of capital, operation and maintenance costs are summarized in Table VII-7. Zones V, VIII, XV and XVII were excluded since no usable agricultural land was identified in those areas.

Additional columns in the table show annual labor and electrical energy costs. Both costs are a part of the operation and maintenance cost but were identified individually due to their special significance. Labor and energy costs represent only those costs associated with the distribution, irrigation and collection systems. The energy cost was based on $0.0125 per kw-hr.

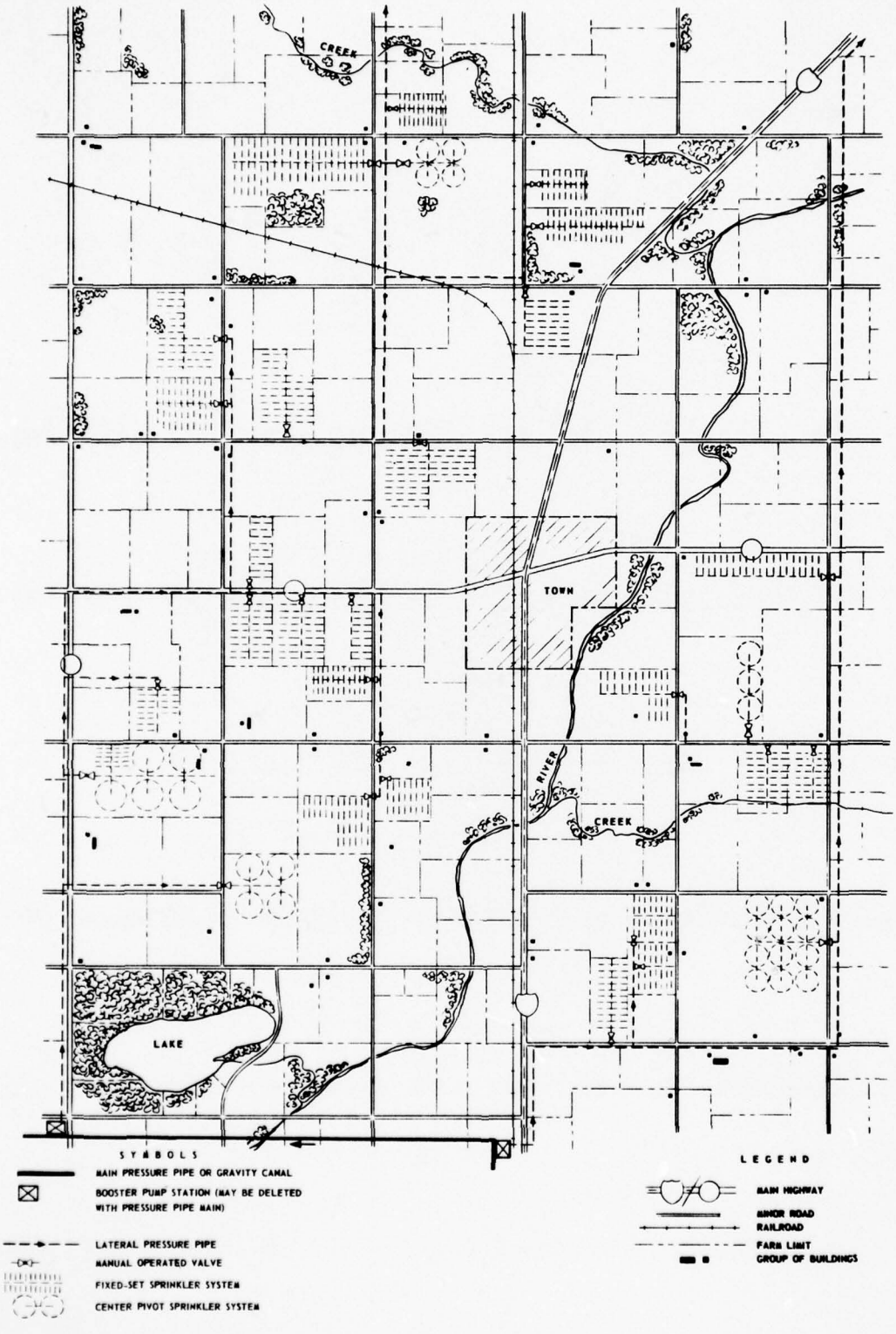

Figure VII-3

Distribution and Irrigation System on
Hypothetical Area in Southeastern Michigan

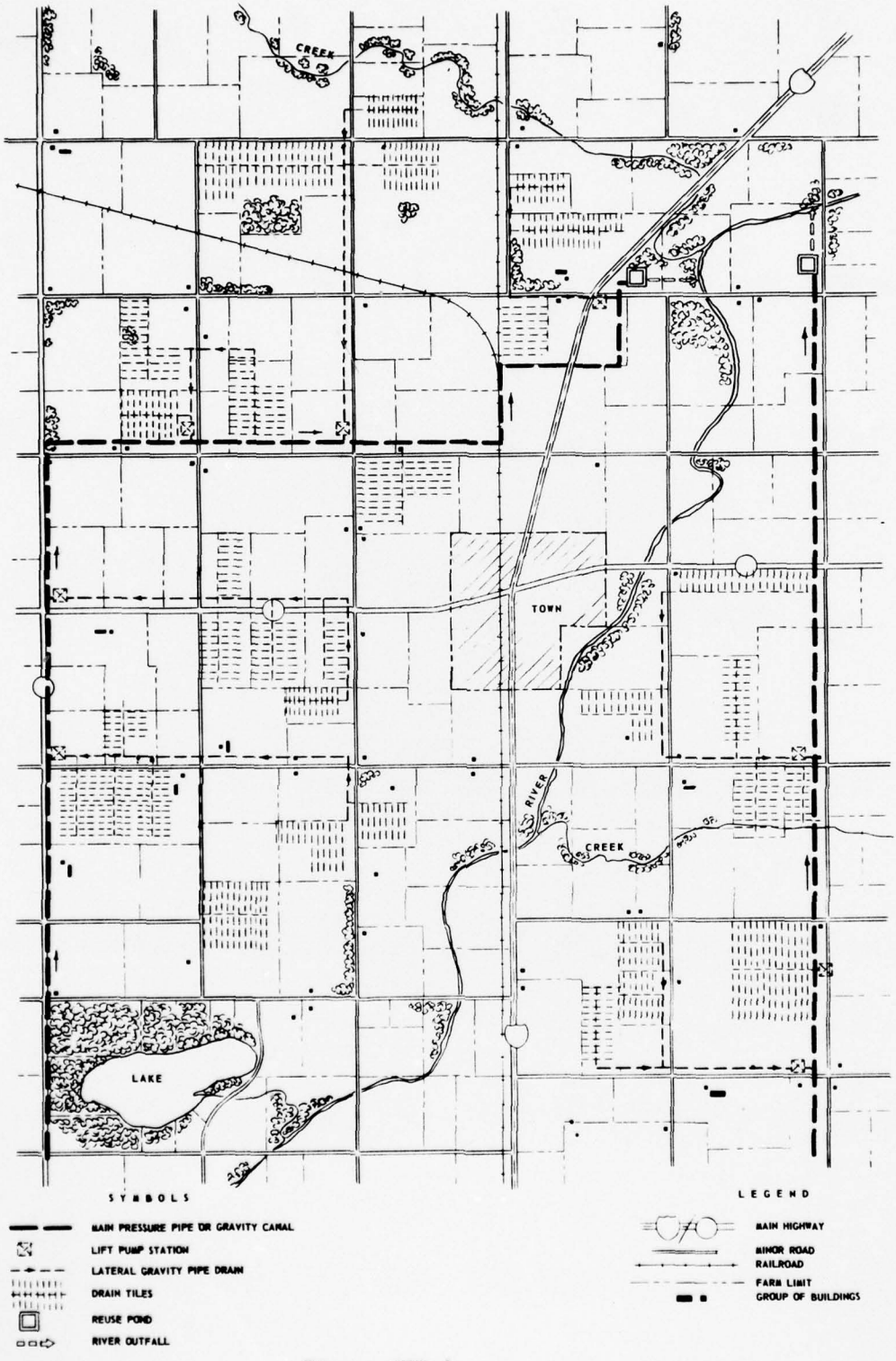

Figure VII-4

Drainage and Collection Systems on Hypothetical Area in Southeastern Michigan

Table VII-6

Irrigation Cost Summary

	CAPITAL ($1000)	CAPITAL RECOVERY ($1000)	O & M ($1000)	TOTAL ANNUAL COST ($1000)	COST PER MG OF WATER APPLIED	
					CAPITAL ($/MG)	ANNUAL ($/MG)
ZONE 1						
ARENAC	180426	10656	7271	17927	5113	508
BAY	66314	3916	2748	6665	5461	549
GLADWIN	110276	6513	4710	11222	4800	489
MIDLAND	92805	5481	3842	9323	3841	386
TOTAL	449821	26566	18570	45137	4757	477
ZONE 2						
HURON	943637	55731	35671	91402	6989	677
LAPEER	3486	206	137	343	5835	574
SANILAC	311572	18401	12637	31038	4809	479
ST. CLAIR	34315	2027	1390	3417	5824	580
TUSCOLA	293918	17359	10938	28297	5142	495
TOTAL	1586927	93724	60773	154497	6024	586
ZONE 3						
CLINTON	282253	16670	11241	27911	6729	665
GRATIOT	482495	28496	18907	47403	6034	593
MIDLAND	28382	1676	1101	2777	7015	686
TOTAL	793129	46842	31249	78091	6297	620
ZONE 4						
ARENAC	37670	2225	1517	3741	8184	813
BAY	234442	13846	9577	23424	5975	597
CLINTON	64506	3810	2655	6465	4432	444
GENESEE	142907	8440	5864	14304	4819	482
GRATIOT	125322	7401	5064	12465	6145	611
HURON	5558	328	210	538	7581	734
LAPEER	3061	181	125	306	5124	512
MIDLAND	90936	5371	3700	9071	7182	716
SAGINAW T	620124	36624	25233	61858	5946	593
SHIAWASSEE	170159	10050	6998	17048	4983	499
TUSCOLA	459362	27130	17466	44596	7069	686
TOTAL	1954047	115405	78410	193815	5997	595
ZONE 6						
LAPEER T	104614	6178	4291	10469	4603	461
MACOMB	76969	4546	3317	7862	3931	402
SANILAC	421109	24871	17098	41969	4555	454
ST. CLAIR	197566	11668	8120	19788	5363	537
TOTAL	800257	47263	32825	80088	4663	467
ZONE 7						
ST. CLAIR	32757	1935	1579	3513	3394	364
TOTAL	32757	1935	1579	3513	3394	364
ZONE 9						
CLINTON	157660	9311	6537	15848	4571	459
EATON	162695	9609	6804	16412	4478	452
INGHAM	133965	7912	5425	13337	4441	442
JACKSON	10742	634	431	1065	3470	344
LIVINGSTON	5077	300	202	502	3142	311
SHIAWASSEE	115042	6794	4794	11588	4230	426
TOTAL	585181	34560	24192	58752	4403	442

AD-A041 115 SOUTHEASTERN MICHIGAN WASTEWATER MANAGEMENT SURVEY SCOPE STUDY DESIGN AND COST APPENDIX(U) CORPS OF ENGINEERS DETROIT MICH DDTROIT DISTRICT MAY 74

5/6

UNCLASSIFIED

F/G 13/2

NL

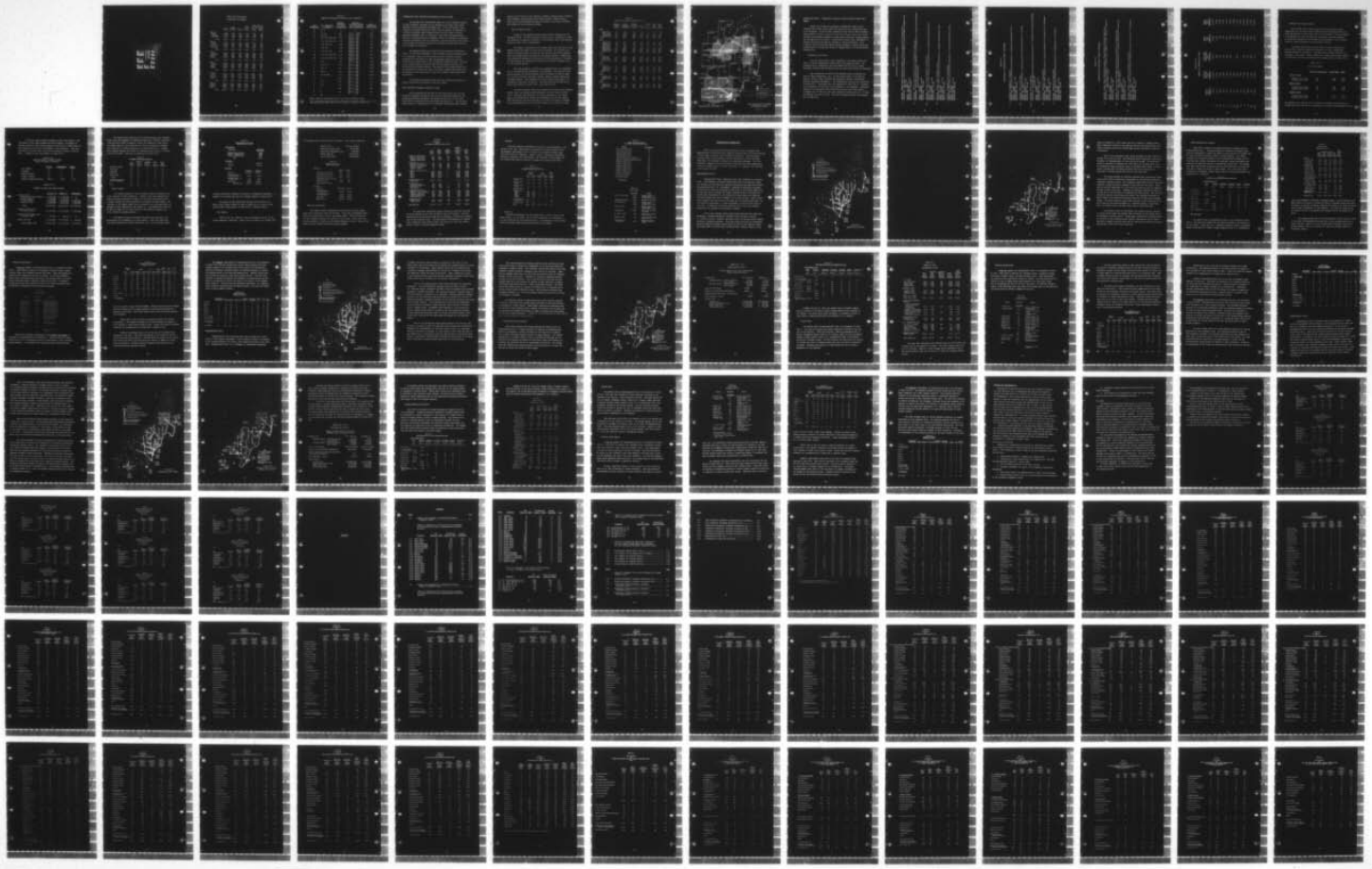

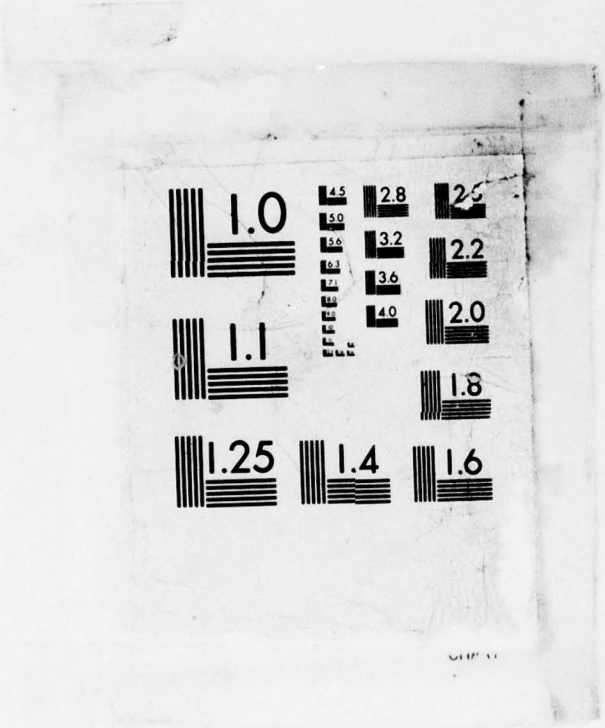
1.0
1.1
1.25
1.4
1.6
1.8
2.0
2.2
2.8
3.2
3.6
4.0
4.5
5.0
5.6

Table VII-6 (Continued)

Irrigation Cost Summary

	CAPITAL ($1000)	CAPITAL RECOVERY ($1000)	O & M ($1000)	TOTAL ANNUAL COST ($1000)	COST PER MG OF WATER APPLIED	
					CAPITAL ($/MG)	ANNUAL ($/MG)
ZONE 10						
GENESEE	47991	2834	2113	4947	7786	803
INGHAM	153248	9051	6391	15441	4775	481
LIVINGSTON	81067	4788	3474	8262	4181	426
SHIAWASSEE	45771	2703	1890	4593	5361	538
TOTAL	328076	19376	13868	33244	4957	502
ZONE 11						
GENESEE	74029	4372	2928	7300	5134	506
LAPEER	122786	7252	4934	12186	3699	367
LIVINGSTON	207248	12240	8133	20373	4685	461
OAKLAND	24998	1476	989	2465	5137	507
SHIAWASSEE	5734	339	224	562	5802	569
TOTAL	434794	25679	17207	42886	4450	439
ZONE 12						
LAPEER	22935	1355	891	2245	3527	345
LIVINGSTON	14841	876	632	1508	2413	245
MACOMB	140143	8277	5927	14204	6583	667
OAKLAND	111538	6587	4581	11169	3535	354
WAYNE	1962	116	84	200	2492	254
TOTAL	291419	17211	12115	29326	4397	442
ZONE 13						
EATON	2657	157	103	260	3057	299
HILLSDALE	393579	23245	14978	38223	4178	406
INGHAM	49955	2950	1938	4888	3205	314
JACKSON	257434	15204	10012	25216	3147	308
LENAWEE	12952	765	511	1275	4376	431
TOTAL	716577	42321	27542	69862	3667	357
ZONE 14						
HILLSDALE	110626	6534	4763	11296	12271	1253
LENAWEE	271461	16032	11210	27243	12342	1239
OAKLAND	8959	529	374	904	4296	433
WASHTENAW	214441	12665	8875	21540	3934	395
WAYNE	1192	70	49	120	4527	455
TOTAL	606679	35830	25272	61102	6904	695
ZONE 16						
LENAWEE	438289	25885	17590	43475	7280	722
MONROE	410973	24272	16030	40302	4555	447
WASHTENAW	111771	6601	4639	11240	3730	375
WAYNE	58057	3429	2370	5799	3587	358
TOTAL	1019089	60187	40628	100815	5184	513

Table VII-7

Summary of Design Data Related to Soil Association

Soil Association	Soil Management Groups	Maximum Irrigation of Crops+ (Inches/Week)	Selected Irrigation Method and Application Rate (Inches/Hour)	Soil Permeability (Inches/Hour)
D	0, 1	--	--	--
E	1	--	--	--
F	1, 1.5	1.0	FS-0.1 - 100%++	0.2
G	1, 1.5	1.0	FS-0.1 - 100%	0.2
H	1.5, 2.5, 4/2, 3/2	1.25	FS-0.1 - 50% FS-0.2 - 50%	0.2
I	1.5, 2.5, 4/2, 3/2	1.25	FS-0.1 - 50% FS-0.2 - 50%	0.2
J	1.5, 3/2, 4/2	1.25	FS-0.1 - 50% FS-0.2 - 50%	0.2
K	1.5, 2.5	1.25	FS-0.1 - 50% FS-0.2 - 50%	0.2
L	1.5, 2.5, 4/2	1.25	FS-0.1 - 50% FS-0.2 - 50%	0.2
Mn	1.5, 2.5, 3/2, 4/2	1.25	FS-0.1 - 50% FS-0.1 - 50%	0.2
Ms	1.5, 2.5, 3/2, 4/2	1.25	FS-0.1 - 50% FS-0.1 - 50%	0.2
N	3, 4	2.0	FS-0.2 - 85% CP - 15%	0.75
O	2.5, 3, 4	1.75	FS-0.2 - 90% CP - 10%	0.50
P	3/5, 4	2.0	FS-0.2 - 85% CP - 15%	0.75
Q	3/5, 4	2.0	FS-0.2 - 85% CP - 15%	0.75
R	4, 3/5, 4/2	1.75	FS-0.2 - 90% CP - 10%	0.50
S	4	2.0	FS-0.2 - 75% CP - 25%	1.5
T	4, 5	2.0	FS-0.2 - 75% CP - 25%	1.5
U	4, 5	2.0	FS-0.2 - 75% CP - 25%	1.5
V	5	2.0	FS-0.2 - 75% CP - 25%	2.0
W	5	2.0	FS-0.2 - 75% CP - 25%	2.0
X	Mc	--	--	--

+These values are subsequently used to size the distribution system.

++FS = Fixed-set sprinkler system, CP = center-pivot sprinkler system; 0.1 or 0.2 = application rate; percentage of usable cropland irrigated by this method.

ALTERNATIVES USING WASTEWATER IRRIGATION ON PRIVATE FARMS

Two systems were investigated using the private ownership concept of land irrigation treatment for all wastewater and urban storm runoff generated in the Southeastern Michigan area. In one alternative, Land Irrigation Treatment Alternative Three, aerated lagoons, as described in previously presented land irrigation plans, would be used to achieve secondary treatment prior to irrigation. The second alternative would make use of existing secondary treatment plants for treatment of municipal-industrial wastewater prior to irrigation. Urban runoff would only receive the equivalent of primary treatment at stormwater storage sites prior to final storage and irrigation.

The second alternative was never carried beyond the preliminary stage. It did offer advantages in that existing facilities would not have to be abandoned. These facilities would be used to provide secondary treatment and chlorination so that raw wastewater would not be transported over the long routes to the storage and irrigation sites. The cost of the system, however, would not have differed greatly from that of a system utilizing aerated lagoons. The amount of land required would not be significantly reduced over other total land treatment plans since storage lagoons, which require most of the land at lagoon sites, would still be required.

An additional alternative using this land irrigation concept on a smaller scale will be discussed in the next chapter.

LAND IRRIGATION TREATMENT ALTERNATIVE THREE

This alternative was designed for the same service area as Land Irrigation Treatment Alternative One and has an identical design for the municipal-industrial wastewater interceptor systems, and for the urban storm runoff collection and storage system (see Chapter 5). The two major pickup points for transmission to the treatment and storage lagoon systems

remain at the location of the regional stormwater storage sites in Chesterfield Township, Macomb County and in Berlin Township, Monroe County. These facilities determined the basis for design of the lagoon treatment and storage and land irrigation systems.

Land Irrigation System

Design of the treatment system centered around selection of the irrigation zones. The major selection criteria were: suitability of land for wastewater irrigation, proximity to the wastewater source and centralization for lower cost of distribution.

The amount of wastewater to be treated would vary from year to year depending upon the amount of storm runoff collected. On a 25-year frequency, the annual storm flow from the area would be 489 billion gallons while the average annual flow would be 219 billion gallons. Annual municipal-industrial wastewater flow would be 518 billion gallons. The amount of land required for irrigation was based on the 25-year frequency flow of 1,007 billion gallons.

The land southwest of Detroit was considered first for irrigation due to its proximity and suitability for irrigation. Of the total 1,007 billion gallons, 460 billion gallons could be accepted by land in zones 13, 14 and 16 in Eaton, Hillsdale, Ingham, Jackson, Lenawee, Monroe and Washtenaw Counties. The remaining 547 billion gallons would have to be irrigated on land north of Detroit. The areas selected included all of zone 6 and portions of zones 2 and 4 (see Figure VII-5).

The areas selected, annual and average flows which can be accepted, capital costs, and operation and maintenance costs are shown in Table VII-8. Operation and maintenance costs were adjusted for the average annual flow (maintenance, supply and replacement costs did not change, labor and energy costs were adjusted by the ratio of average to maximum flow and administrative costs were held constant; see Table XIV of Dow

TABLE VII-8

DESIGN AND COST DATA FOR SELECTED IRRIGATION AREAS

	USABLE AGRICULTURAL LAND 1000 Ac	TOTAL WASTEWATER APPLICATION 1000 Ac-IN/YR	AVERAGE APPLICATION RATE (365 DAYS) MGD	CAPITAL COST $MILLION	AMORTIZED CAPITAL COST $MILLION	ANNUAL O&M COST $MILLION	TOTAL ANNUAL COST $MILLION
ZONE 2							
Huron County	17.9	313.7	23.3	59.7	3.5	2.1	5.6
Lapeer County	1.0	22.0	1.6	3.5	.2	.1	.3
Sanilac County	101.3	2386.0	177.2	311.6	18.4	11.8	30.2
St. Clair County	11.2	217.0	16.1	34.3	2.0	1.3	3.3
Tuscola County	85.0	2105.5	156.3	293.9	17.4	10.1	27.5
TOTAL:	216.4	5043.7	374.5	703.0	41.5	25.4	66.9
ZONE 4							
Clinton County	21.0	536.0	39.8	64.5	3.8	2.5	6.3
Genesee County	46.8	1092.0	81.1	142.9	8.4	5.5	13.9
Gratiot County	40.8	751.0	55.8	125.3	7.4	4.8	12.2
Huron County	1.5	27.0	2.0	5.5	.3	.2	.5
Lapeer County	1.0	22.0	1.6	3.1	.2	.1	.3
Midland County	7.6	116.6	8.7	22.7	1.3	.9	2.2
Saginaw County	163.9	3090.0	229.4	499.0	29.5	19.0	48.5
Shiawassee County	56.0	1257.6	93.4	170.2	10.0	6.6	16.6
Tuscola County	100.1	1925.2	143.0	369.6	21.8	13.2	35.0
TOTAL:	438.7	8817.4	654.8	1402.8	82.7	52.8	135.5
ZONE 6							
Lapeer County	34.0	837.0	62.1	104.6	6.2	4.0	10.2
Macomb County	26.8	721.0	53.5	77.0	4.5	3.1	7.6
Sanilac County	134.0	3405.0	252.8	421.1	24.9	16.0	40.9
St. Clair County	65.5	1356.6	100.7	197.6	11.7	7.6	19.3
TOTAL:	260.3	6319.6	469.1	800.3	47.3	30.7	78.0
ZONE 13							
Eaton County	0.8	32.0	2.4	2.7	.2	.1	.3
Hillsdale County	108.0	3469.0	257.6	393.6	23.2	13.5	36.7
Ingham County	15.0	574.0	42.6	50.0	3.0	1.7	4.7
Jackson County	77.3	3013.0	223.7	257.4	15.2	8.9	24.1
Lenawee County	3.5	109.0	8.1	12.9	.8	.5	1.3
TOTAL:	204.6	7197.0	534.4	716.6	42.4	24.7	67.1
ZONE 14							
Hillsdale County	34.4	332.0	24.6	110.6	6.5	4.4	10.9
Lenawee County	79.2	810.0	60.1	271.5	16.0	10.4	26.4
Washtenaw County	73.0	2007.5	149.0	214.4	12.7	8.0	20.7
TOTAL:	186.6	3149.5	233.7	596.5	35.2	22.8	58.0
ZONE 16							
Lenawee County	137.3	2217.0	164.6	438.3	25.9	17.6	43.5
Monroe County	133.0	3323.0	246.7	411.0	24.3	16.0	40.3
Washtenaw County	39.5	1103.5	82.0	111.8	6.6	4.6	11.2
TOTAL:	309.8	6643.5	493.3	961.1	56.8	38.2	95.0

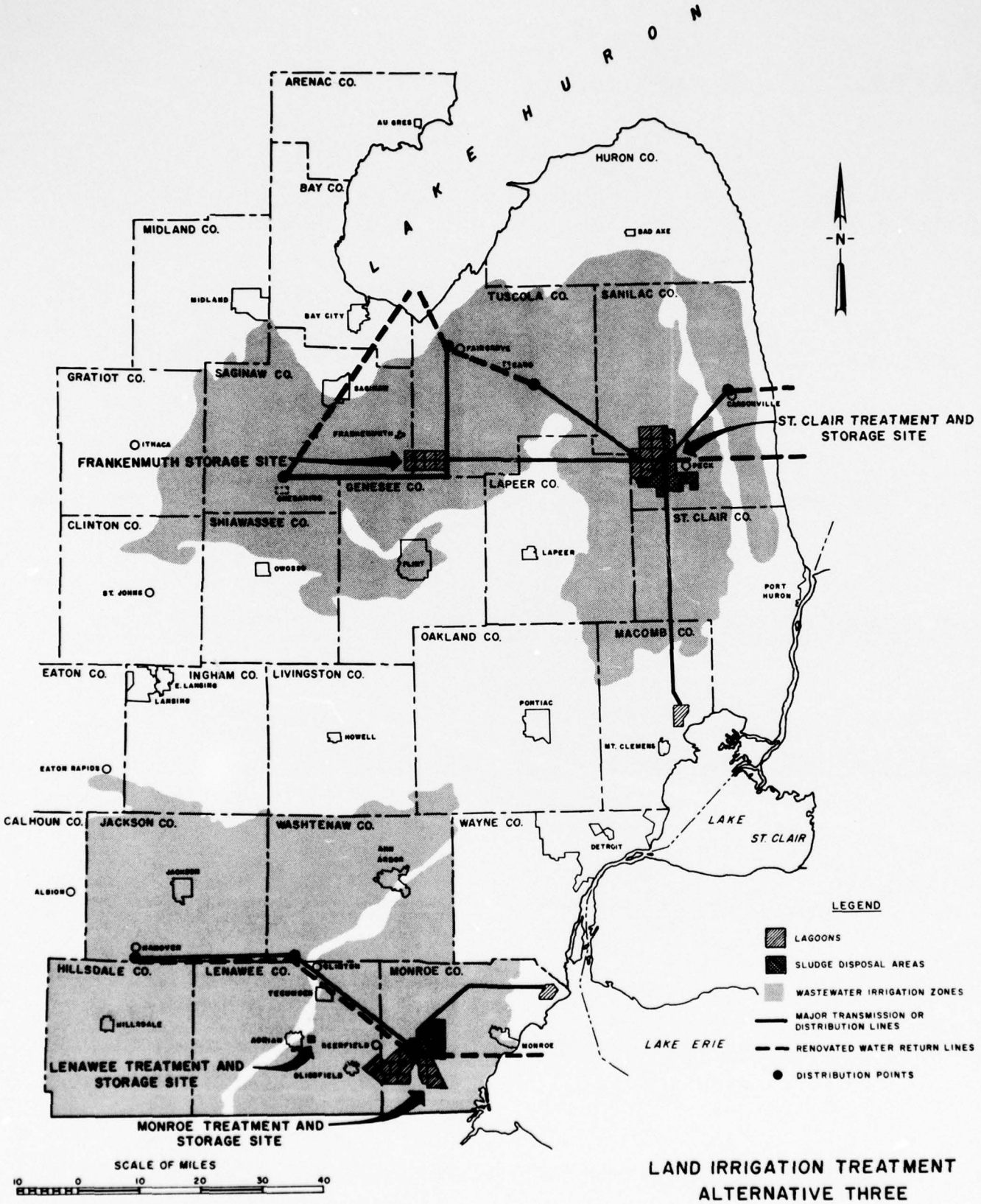

LAND IRRIGATION TREATMENT
ALTERNATIVE THREE

FIGURE VII-5

Engineering Report: "Wastewater Irrigation Using Privately Owned Farmland").

Figure VII-5 shows the wastewater transmission tunnel routes, treatment and storage lagoon sites and vicinity of the agricultural land to be irrigated. As can be seen, wastewater would flow to major treatment lagoon sites in Sanilac County near Peck and in Monroe County near Dundee At these sites primary treatment, aerated lagoon treatment, sludge disposal and storage would be provided. An additional facility near Frankenmuth in Tuscola County would be used for storage of treated wastewater. Also, a smaller facility providing aerated lagoon treatment, sludge disposal and storage would be located near Adrian in Lenawee County to serve the Adrian-Tecumseh area.

Transmission Facilities

From the lagoon areas, major transmission lines would convey the water to central distribution points within the irrigation zones. The remaining major transmission facilities shown would be used to convey percolate collected from irrigation areas to major water bodies for discharge.

The transmission facilities were designed using the methods outlined by Bauer Engineering, Inc., in their final report to the Detroit District titled "Lagoon Treatment and Conveyance Systems, Southeastern Michigan Wastewater Management." The transmission facilities are described in Table VII-9. Conveyance costs are summaried in Table VII-10. Itemized cost information can be found in the addendum to this appendix. Conveyance systems to the irrigation area distribution points were sized based on irrigation for 270 days per year and a maximum irrigation rate of 1.5 times the average rate over 270 days. Percolate discharge systems were designed for the same flow.

TABLE VII-9

DESCRIPTION OF CONVEYANCE SYSTEMS

I. LOCATION: Macomb County Equalization Lagoon to Sanilac County Lagoon Treatment Site
DESCRIPTION: Mole tunnel carrying M&I wastewater and stormwater to aerated lagoon treatment site near Peck.
LENGTH: 30.4 Miles
MAXIMUM DIAMETER: 25 Feet
DESIGN FLOW: 3150 MGD

II. LOCATION: Sanilac County Treatment Site to Frankenmuth Storage Site.
DESCRIPTION: Force Main carrying treated wastewater to the Frankenmuth for storage and distribution to the irrigation systems.
LENGTH: 40 Miles
MAXIMUM DIAMETER: 16 Feet
DESIGN FLOW: 1018 MGD

III. LOCATION: Sanilac County Treatment to Carsonville.
DESCRIPTION: Gravity sewer carrying treated wastewater to irrigation distribution point.
LENGTH: 22 Miles
MAXIMUM DIAMETER: 11 Feet
DESIGN FLOW: 171 MGD

IV. LOCATION: Sanilac County Treatment to Caro.
DESCRIPTION: Mole tunnel carrying treated wastewater to irrigation distribution point.
LENGTH: 28 Miles
MAXIMUM DIAMETER: 11 Feet
DESIGN FLOW: 473 MGD

V. LOCATION: Frankenmuth site to Chesaning.
DESCRIPTION: Mole tunnel carrying treated wastewater to irrigation distribution point.
LENGTH: 25 Miles
MAXIMUM DIAMETER: 15 Feet
DESIGN FLOW: 968 MGD

TABLE VII-9

DESCRIPTION OF CONVEYANCE SYSTEMS (CONTINUED)

VI. LOCATION: Frankenmuth to Fairgrove.
DESCRIPTION: Force main carrying treated wastewater to irrigation distribution point.
LENGTH: 15 Miles
MAXIMUM DIAMETER: 9.5 Feet
DESIGN FLOW: 266 MGD

VII. LOCATION: Peck to Lake Huron
DESCRIPTION: Gravity interceptor carrying collected irrigation percolate to the lake.
LENGTH: 24.6 Miles
MAXIMUM DIAMETER: 15 Feet
DESIGN FLOW: 951 MGD

VIII. LOCATION: Caro to Fairgrove.
DESCRIPTION: Force main carrying collected irrigation percolate to Fairgrove for eventual discharge to Saginaw Bay.
LENGTH: 14 Miles
MAXIMUM DIAMETER: 11 Feet
DESIGN FLOW: 367 MGD

IX. LOCATION: Fairgrove to Saginaw Bay.
DESCRIPTION: Gravity sewer carrying collected irrigation percolate to Saginaw Bay for discharge.
LENGTH: 18 Miles
MAXIMUM DIAMETER: 14 Feet
DESIGN FLOW: 726 MGD

X. LOCATION: Chesoning to Saginaw Bay.
DESCRIPTION: Force main carrying collected percolate to Saginaw Bay for discharge.
LENGTH: 38 Miles
MAXIMUM DIAMETER: 15 Feet
DESIGN FLOW: 968 MGD

TABLE VII-9

DESCRIPTION OF CONVEYANCE SYSTEMS (CONTINUED)

XI. LOCATION: Monroe County Equalization Lagoon to Monroe County Treatment Lagoon Site.
DESCRIPTION: Mole Tunnel carrying M&I wastewater and stormwater to the treatment lagoons in western Monroe County.
LENGTH: 26 Miles
MAXIMUM DIAMETER: 22 Feet
DESIGN FLOW: 2,560 MGD

XII. LOCATION: Monroe County Treatment and Storage Site westward to irrigation areas.
DESCRIPTION: Mole tunnel carrying treated wastewater to irrigation distribution points near Clinton and Hanover.
LENGTH: 50.5 Miles
MAXIMUM DIAMETER: 18 Feet
DESIGN FLOW: 1555 MGD

XIII. LOCATION: Hanover to Clinton to Deerfield to Lake Erie.
DESCRIPTION: Mole tunnel carrying collected irrigation percolate to Lake Erie for discharge.
LENGTH: 72.5 Miles
MAXIMUM DIAMETER: 18 Feet
DESIGN FLOW: 1710 MGD

TABLE VII-10

SUMMARY OF TRANSMISSION COSTS

	CAPITAL COST $MILLION	AMORTIZED CAPITAL COST $MILLION	AMORTIZED REPLACEMENT COST $MILLION	ANNUAL O&M COST $MILLION	TOTAL ANNUAL COST $MILLION
I	322.9	19.070	1.656	20.592	41.318
II	111.2	11.216	.360	1.681	8.609
III	50.8	3.002	.072	.190	3.264
IV	49.2	2.904	.132	.758	3.794
V	62.7	3.702	.186	1.163	5.051
VI	26.7	1.575	.066	.388	2.029
VII	45.5	2.685	--	.171	2.856
VIII	25.2	1.491	.066	.196	1.753
IX	32.1	1.897	--	.120	2.017
X	102.2	6.039	.360	5.023	11.422
XI	188.6	11.139	.741	2.668	14.548
XII	96.1	5.676	.090	7.963	13.729
XIII	282.8	16.700	.473	4.484	21.657

Treatment and Storage Lagoons

The treatment and storage lagoon locations selected by Bauer Engineering for the earlier land irrigation treatment designs were considered appropriate for this system; but it was necessary to vary the design to accommodate the flows for which the irrigation areas were designed. An additional storage site was located near Frankenmuth to aid in distribution of treated wastewater in the northern counties.

The design methodology used was taken from Bauer Engineering's report titled "Lagoon Treatment and Conveyance Systems, Southeastern Michigan Wastewater Management." Treatment lagoon systems consisted of screening, grit removal, aerated lagoons and sedimentation-storage lagoons. The flow rates for which the lagoons were designed appear in Table VII-11.

TABLE VII-11

DESIGN FLOW RATES

	MUNICIPAL-INDUSTRIAL	STORM RUNOFF	TOTAL
SANILAC COUNTY			
Maximum Daily (MGD)	862	1080	1942
Average Daily (MGD)	862	300	1162
MONROE COUNTY			
Maximum Daily (MGD)	558	1080	1638
Average Daily (MGD)	558	300	858
LENAWEE COUNTY			
Maximum Daily (MGD)	12	10.5	22.5
Average Daily (MGD)	12	5.3	17.3

The maximum daily flow was used for design of treatment facilities and the average daily flow was used for computation of operation and maintenance costs.

The initial lagoon systems designed by Bauer were modular, thus the design for the large systems were easily adapted. The number of modules required at each location appear in Table VII-12 (Design data for each system can be found in the addendum to this appendix). Cost data was taken as a direct ratio of the costs presented in Bauer's original work. A summary of the costs appears in Table VII-13.

TABLE VII-12
MODULAR DESIGN OF LAGOON SYSTEMS
(Units in number of modules)

	SANILAC	FRANKENMUTH	MONROE
GRIT REMOVAL	21	--	18
SCREENING	15	--	13
AERATED LAGOONS	25	--	21
STORAGE LAGOONS	11	8	16
SEEPAGE CONTROL(Perimeter)	235 mi.	22 mi.	54 mi.

TABLE VII-13

SUMMARY OF COSTS FOR LAGOON SYSTEMS

	SANILAC CO.	MONROE CO.	FRANKENMUTH
Capital Costs:			
Screening and Grit Removal	$ 3,970,000	$ 3,430,000	$ -0-
Aerated Lagoons	91,060,000	76,730,000	-0-
Storage Lagoons	92,970,000	178,760,000	82,140,000
Seepage Control	2,930,000	4,550,000	1,860,000
TOTAL:	$190,930,000	$263,470,000	$84,000,000
Amortized Capital Cost (50 Years @ 5½%)	$ 11,277,000	$ 15,561,000	$ 4,961,000
Amortized Replacement Cost (50 Years @ 5½%)	$ 502,000	$ 422,000	$ -0-
Annual O&M Cost	$ 19,143,000	$ 15,762,000	$ 380,000
TOTAL ANNUAL COST:	$ 30,922,000	$ 31,745,000	$ 5,341,000

The lagoon system required for the Adrian-Tecumseh area (Lenawee County site) was designed for Combination Wastewater Treatment Alternative Three and can be found in Chapter 4 and in the addendum to this report. The design flows for the system were 22.5 million gallons as a maximum daily flow and 15.3 million gallons as an average daily flow. Storage and irrigation designs were based on a maximum annual flow of 6.7 billion gallons (18.4 MGD). Cost data is summarized in Table VII-14.

TABLE VII-14

COST SUMMARY - LENAWEE COUNTY LAGOON SYSTEM

	Capital Cost $Million	Ammortized Capital Cost $Thousand	Ammortized Replacement Cost $Thousand	Annual O&M Cost $Thousand	Total Annual Cost $Thousand
Screening & Grit Removal	0.18	10	--	44	54
Aerated Lagoons	1.91	113	26	191	330
Storage Lagoon	6.62	391	--	28	419
Seepage Control	0.25	15	--	45	60
Sludge Application	0.49	28	--	50	78
Sub Total	9.44	557	26	358	941
Engineering, Administration, Legal, and Contingency	2.83	167	--	--	167
Land	1.11	66	--	--	66
Total	13.94	790	26	358	1174

Sludge Disposal

All sludges generated in this alternative would be disposed of by either landfill or land application. Landfill areas were designed in St. Clair and Lenawee Counties for disposal of grit and screenings from the treatment lagoons and solids deposited in stormwater storage lagoons. The remainder of the sewage sludge would be disposed of by land application as designed by Bauer Engineering (see Chapter 4). Land application areas can be seen in figure VII-5 in the vicinity of the aeration lagoons in St. Clair, Monroe and Lenawee Counties.

The landfill areas were designed assuming equal portions of the storm solids to be disposed of at each location. Costs were taken from the curves presented by Stanley Consultants, Inc., in the attached report,

TABLE VII-15

DESIGN SUMMARY AND COST ESTIMATE
FOR SLUDGE LANDFILL FACILITIES

SLUDGE PRODUCTION

Sludge Sources	Design Solids Rate (CY/Year)
Stormwater Storage Facilities	770,000
Monroe Co. Screenings and Grit	38,000
Sanilac Co. Screenings and Grit	58,000
Lenawee Co. Screenings and Grit	1,000
TOTAL:	867,000

LAND REQUIRED

Sanilac Co.	1,000 Acres
Lenawee Co.	960 Acres

COST SUMMARY

	ST. CLAIR CO.	LENAWEE CO.
Capital Cost	$4,680,000	$4,630,000
Amortized Capital Cost (50 Years @ 5½%)	277,000	273,000
Amortized Replacement Cost (50 Years @ 5½%)	67,000	65,000
Annual O&M Cost	996,000	1,000,000
TOTAL ANNUAL COST:	$1,340,000	$1,338,000

"Advanced Wastewater Treatment Facilities for Southeastern Michigan." A summary of the design data and cost estimate appears in Table VII-15.

The design of land application systems for the Sanilac and Monroe County lagoon systems is shown in Table VII-16. Costs for the Lenawee County system appear in Table VII-14, presented earlier.

Cost Summary

Table VII-17 is a summary of the cost estimates for all of the system components identified. Annual costs are based on an interest rate

of 5½ percent over a project life of 50 years. Total system costs are:

Capital Cost	$10,080,000,000
Amortized Capital Cost	596,000,000
Amortized Replacement Cost	6,000,000
Annual O&M Cost	288,000,000
Total Annual Cost	890,000,000

TABLE VII-16

SUMMARY OF LAND APPLICATION
SLUDGE DISPOSAL DESIGNS

	SANILAC	MONROE
DESIGN DATA		
Sludge Production--Dry Tons/MG	0.8	0.8
M&I Wastewater Design--Rate MGD	862	558
Annual Sludge Production--Tons	252,000	163,000
Sludge Application Rate--Tons/Acre-YR	10	10
Land Required--Acres	25,200	16,300
Number of Dredge-Plow Systems	11	7
COST SUMMARY		
Capital Cost	$80,760,000	$58,410,000
Amortized Capital Cost (50 Years @ 5½%)	4,770,000	3,450,000
Amortized Replacement Cost (50 Years @ 5½%)	267,000	150,000
Annual O&M Cost	3,309,000	2,169,000
Total Annual Cost	8,346,000	5,769,000

Resource Requirements

The primary resource demands which would result from the system would be for electrical power and chlorine. Other fuel requirements would result from operation of tractors and sludge trucks. Chlorine should be the only chemical required for operation of the system. Ozone would also be used; however, it would be electrically generated on site. Table VII-18 shows the major chemical demands and energy demands.

TABLE VII-17

COST SUMMARY
FOR
LAND IRRIGATION TREATMENT ALTERNATIVE THREE

	Capital Cost, $x10^6	Annual Capital Cost, $x10^3	Annual Replacement Cost, $x10^3	Annual Operation and Maintenance Cost, $x10^3	Total Annual Cost, $x10^3
Treatment and Storage Lagoons:					
Sanilac Co. Lagoon System	190.9	11.277	.502	19.143	30.922
Monroe Co. Lagoon System	263.5	15.561	.422	15.762	31.745
Frankenmuth Storage Lagoons	84.0	4.961	--	.380	5.341
Lenawee Co. Lagoon System	12.8	.725	.026	.308	1.059
Sludge Disposal:					
Sanilac Co. Land Application	80.8	4.770	.267	3.309	8.346
Monroe Co. Land Application	58.4	3.450	.150	2.169	5.769
Lenawee Co. Land Application	1.1	.065	.000	.050	.115
St. Clair Co. Landfill	4.7	.277	.067	.996	1.340
Lenawee Co. Landfill	4.6	.273	.065	1.000	1.338
Irrigation and Drainage Systems:					
Zone 2	703.0	41.518	--	25.520	67.038
Zone 4	1,402.8	82.851	--	52.719	135.570
Zone 6	800.3	47.263	--	30.713	77.976
Zone 13	716.6	42.321	--	24.691	67.012
Zone 14	596.5	35.231	--	22.860	58.091
Zone 16	961.0	56.760	--	34.909	91.669
Stormwater Collection and Storage System	2,541.5	150.105	--	7.142	157.247
M&I Interceptors					
St. Clair Co. System	75.3	4.445	--	.390	4.835
Detroit Collection System	42.5	2.512	--	--	2.512
Huron River System	142.1	8.395	--	.741	9.136
Adrian System	10.0	.589	.027	.071	.687
Major Transmission Lines:					
Macomb Co.-St. Clair Lagoons	322.9	19.070	1.656	20.592	41.318
Sanilac Co. Lagoon - Frankenmuth	111.2	6.568	.360	1.681	8.609
Sanilac Co. Distribution	100.0	5.906	.204	.948	7.058
Frankenmuth Distribution	89.4	5.277	.252	1.551	7.080
Monroe Co.-Monroe Lagoons	188.6	11.139	.741	2.668	14.548
Monroe Distribution	96.1	5.676	.090	7.963	13.729
Renovated Water Return:					
Northern System	205.0	12.112	.426	5.510	18.048
Southern System	282.8	16.700	.473	4.484	21.657
TOTAL SYSTEM COST:	10,088.4	595.797	5.728	288.270	889.795

The additional generating capacity required to meet both the peak and daily demands has not been included in the cost estimate. The only consideration for electrical power was an allowance of $0.0125 per kilowatt hour in the operation costs. The approximately 2000 megawatts of peaking power capability would require diesel, gas turbine or some other system equally capable of meeting immediate demand.

Manpower

The total manpower requirement for operation and maintenance of the system is 2815 men. Requirements by operation are shown in Table VII-19. The manpower requirements are not broken out by category; however, most would fall into the categories: general laborer, laboratory technicians, operators, mechanics, and electricians. Not included in the estimate are any laborers who would be required to augment the existing farm labor.

TABLE VII-18

ENERGY AND CHEMICAL REQUIREMENTS
LAND IRRIGATION TREATMENT ALTERNATIVE THREE

	Electrical Power		Chlorine		Diesel Fuel
	Peak MW	Average MW	Maximum T/D	Average T/D	Average Gal/Day
Sanilac Co. Lagoon System	134.5	80.5	64.8	38.8	1408
Monroe Co. Lagoon System	130.0	68.0	54.6	28.6	912
Lenawee Co. Lagoon System	4.7	3.2	1.3	0.9	20
Frankenmuth Lagoons	2.3	1.1	—	--	--
Irrigation Areas:					
Zone 2	38.9	19.1	--	--	--
Zone 4	44.3	21.8	--	--	--
Zone 6	27.9	13.8	--	--	--
Zone 13	42.6	21.0	—	--	--
Zone 14	15.1	7.4	—	--	--
Zone 16	26.4	13.0	--	--	--
Storm Collection and Storage System	1868.5	43.4	--	--	1600
Transmission System	594.4	367.7	—	--	--
TOTAL:	2929.6	660.0	120.7	68.3	3940

Land Use

The land requirements for the system total 1,756,797 acres (2,745 square miles). Of the total, 140,397 acres would have to be purchased or at least controlled by the operating agency. The remaining 1,616,400 acres would be privately owned farm land which would be irrigated.

TABLE VII-19

SUMMARY OF MANPOWER REQUIREMENTS
LAND IRRIGATION TREATMENT ALTERNATIVE THREE

Facility	Total Manpower
Sanilac County Lagoon System	300
Monroe County Lagoon System	241
Lenawee County Lagoon System	6
Frankenmuth Storage Lagoons	12
Stormwater Collection and Storage System	82
Wastewater Transmission and Distribution System	212
Wastewater Irrigation Zone 2	271
Wastewater Irrigation Zone 4	550
Wastewater Irrigation Zone 6	326
Wastewater Irrigation Zone 13	228
Wastewater Irrigation Zone 14	208
Wastewater Irrigation Zone 16	345
St. Clair County Landfill	18
Lenawee County Landfill	16
TOTAL MANPOWER:	2815

TABLE VII-20

LAND USE SUMMARY

	LAND (ACRES)	LAND USE
Sanilac Co. Lagoon System	23,425	Wastewater Treatment and Storage Lagoons
	25,200	Land Application of Sludge
Frankenmuth Lagoon System	16,000	Wastewater Storage Lagoons
Monroe Lagoon System	33,197	Wastewater Treatment and Storage Lagoon
	16,300	Land Application of Sludge
Lenawee Co. System	465	Wastewater Treatment and Storage Lagoons
	350	Land Application of Sludge
Irrigation Areas	1,616,400	Land Irrigation on Agricultural Land
St. Clair Co. Landfill	1,000	Landfill of Grit Screenings and Storm Solids
Lenawee Co. Landfill	960	Landfill of Grit Screenings and Storm Solids
Storm Collection and Storage System	23,500	Underground and Surface Storage of Urban Storm Runoff

REPRESENTATIVE ALTERNATIVES

After the previously defined alternatives were evaluated, three Representative Alternatives were formed by refining some of the more promising of these plans to improve their overall acceptability. The three Representative Plans were developed to reflect application of "best available technology" for wastewater treatment in Southeastern Michigan. They were designed to approach with best available technology and within engineering reason the ultimate goal of Public Law 92-500: to eliminate "the discharge of pollutants" by 1985.

REPRESENTATIVE PLAN 1

Representative Plan 1 emphasizes plant type treatment on a regional scale. The wastewater treatment system would utilize ten regional plants for treatment of municipal and industrial wastewater and urban storm runoff. Representative Plan 1 is a refinement of Combination Wastewater Treatment Alternative Two formed by proposing an IPCT plant at Port Huron rather than an AWT plant and by changing the sludge treatment method to incineration. Limited land availability at the present Port Huron plant site rules out acquiring enough land there to expand it to an AWT facility. Since an IPCT plant requires less land than an AWT system and the existing facilities can be utilized by conversion, it would be possible to build an IPCT plant at this site. In addition to the Port Huron facility, nine other regional plants would be proposed for wastewater treatment.

Six of these regional plants would handle municipal and industrial wastewater. Existing wastewater treatment plants located in Detroit (W. Jefferson Avenue), Wyandotte and Monroe would be upgraded using advanced wastewater treatment processes. Three new plants utilizing the independent physical-chemical treatment process would be added to the regional system. The plants would be located near the Huron River in Monroe County, at East

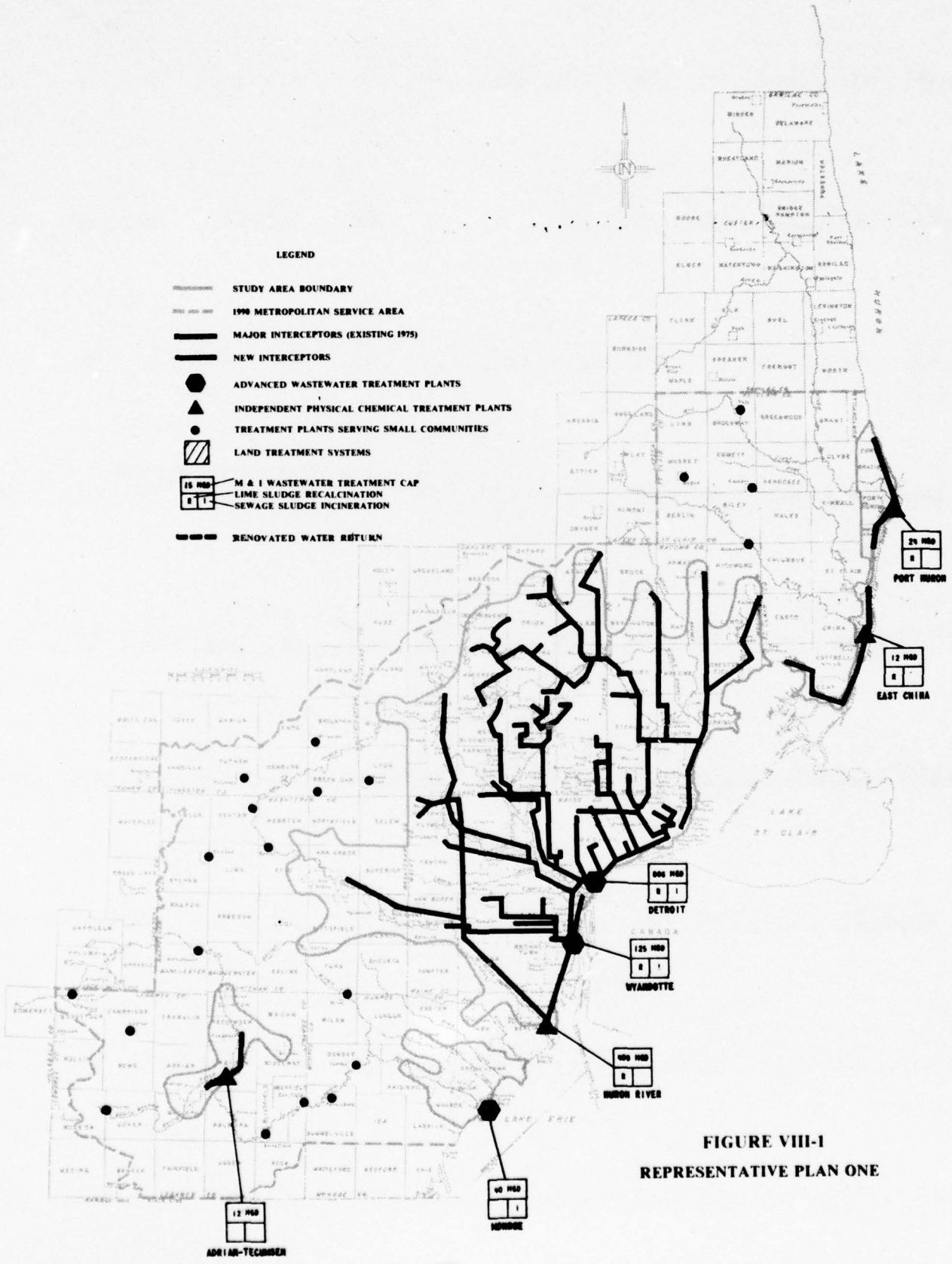

FIGURE VIII-1

REPRESENTATIVE PLAN ONE

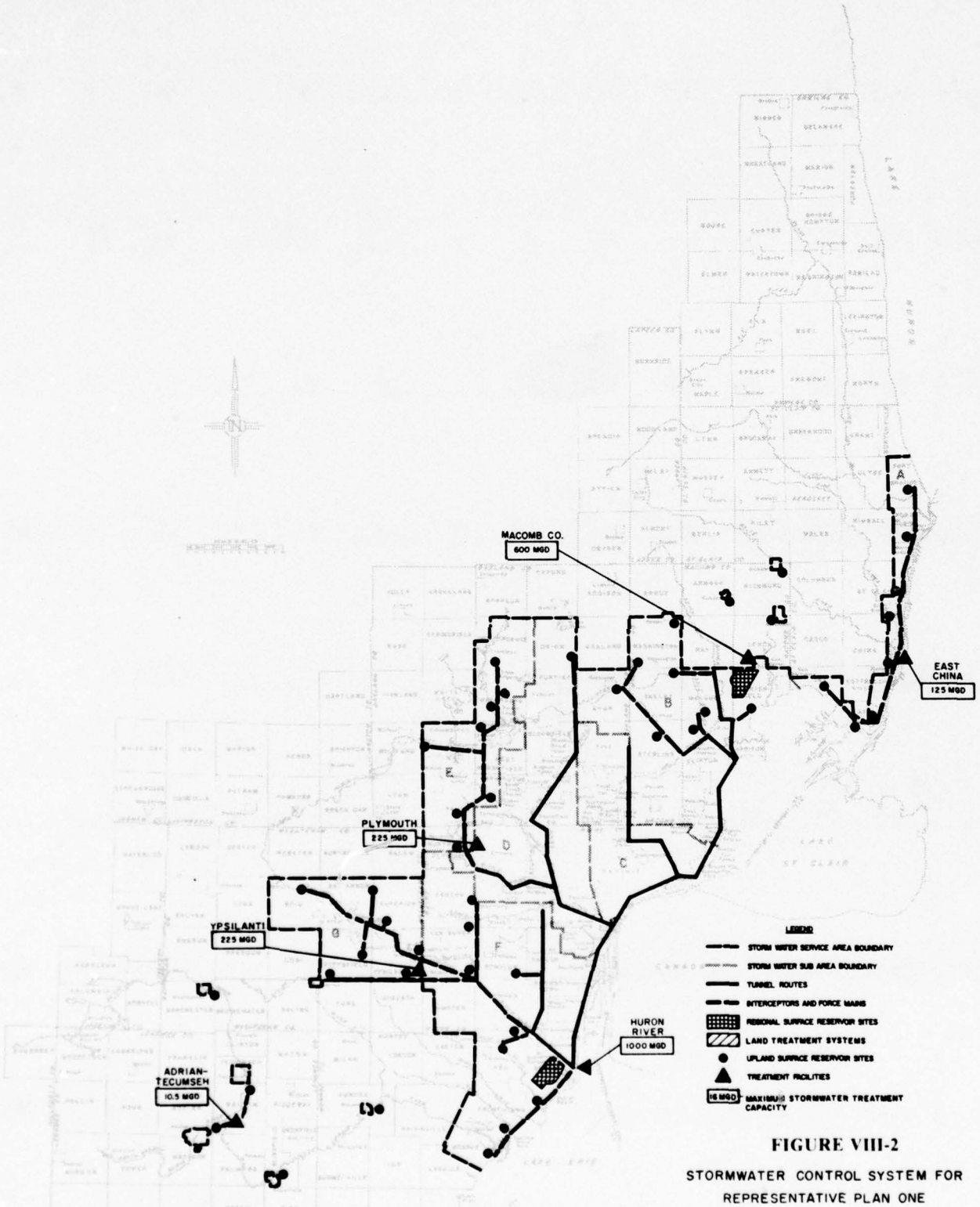

FIGURE VIII-2

STORMWATER CONTROL SYSTEM FOR REPRESENTATIVE PLAN ONE

China in Southern St. Clair County and east of Adrian in Lenawee County. Small communities outside of the regional service area would operate individual treatment plants until growth might warrant extension of regional interceptors.

Most of the interceptor sewer system necessary for this plan will already be in place by 1985. The additional major interceptor construction necessary for implementation of this plan would include: an interceptor along the shoreline in southern St. Clair County to the East China plant, an interceptor along the Detroit River to the Huron River Plant, an interceptor from Ann Arbor following the Huron River to its mouth and an interceptor following Hannan Road north of the Huron River.

The system designed for handling combined sewer overflow and urban storm runoff would be essentially independent of the municipal-industrial wastewater treatment system. The stormwater system would utilize forty-nine community storage reservoirs ranging in size from 80 to 690 acres. Those and two regional reservoirs of 3,120 acres each would be used for temporary storage of peak storm flows. Treatment of collected storm water would be carried out at six facilities all employing the IPCT process. The two major facilities would be located near the sites of the regional reservoirs in Monroe County (collocated with the Huron River M & I plant) and in Macomb County. The other stormwater plant sites would be at the locations of the East China and the Adrian-Tecumseh M & I treatment plants, on the Rouge River in Plymouth and on the Huron River south of Belleville Lake.

An extensive system of interceptors and tunnels would be required to collect storm runoff and combined sewer overflows at the present points of discharge to surface waters. Normal sewer construction techniques would be utilized in less urbanized areas; however, the greater size of sewers required in highly urbanized areas and the construction problems encountered made design of hard rock tunnels necessary.

Sludge Handling and Disposal

Table VIII-1 presents the sludge handling and disposal data for Representative Plan 1. Sludges generated at wastewater treatment plants would be incinerated to reduce the amount of land required for landfill and to reduce the health hazards related to sludge handling. The limited availability of suitable landfill sites in Southeastern Michigan and the resultant land savings overshadows the additional energy requirements and potential air pollution factors of instituting incineration. All sludges from lime clarification processes would be recalcined both to reclaim the lime and to reduce the volume of waste sludge. The solids which would accumulate in stormwater storage lagoons would be removed periodically and disposed of in a landfill.

TABLE VIII-1
REPRESENTATIVE PLAN ONE SLUDGE HANDLING AND DISPOSAL DATA

	DESIGN TREATMENT CAPACITY					
	STORM RUNOFF (MGD)	MUNICIPAL-INDUSTRIAL (MGD)	SEWAGE SLUDGE INCINERATION (Tons/Day)	LIME SLUDGE RECALCINATION (Tons/Day)	SANITARY LANDFILL (Tons/Day)	ACT. CARBON REGENERATION (Tons/Day)
Port Huron Plant	--	24 IPCT	--	72	27	9
East China Plant	125 IPCT	12 IPCT	--	225	73	20
Macomb Co. Plant	600 IPCT	--	--	1226	72	75
Detroit Plant	--	806 AWT	620	895	520	100
Plymouth Plant	225 IPCT	--	--	600	31	28
Ypsilanti Plant	225 IPCT	--	--	600	31	28
Huron River Plant	1000 IPCT	400 AWT	--	2500	692	265
Wyandotte Plant	--	125 AWT	274	139	81	16
Monroe Plant	--	40 AWT	28	--	5	5
Adrian - Tecumseh Plant	10.5 IPCT	12 IPCT	--	--	40	8

System Costs

The system costs for Representative Plan 1 are presented in Table VIII-2. The costs are divided into six areas according to the function of the facilities. These areas are: Municipal-Industrial Plants, Stormwater Plants, Storm and M & I Plants, Sludge Disposal Sites, M & I Transmission

TABLE VIII-2

SUMMARY COST SHEET

REPRESENTATIVE PLAN ONE

	Const. Cost Million Dollars	Amortized Const. Cost Million Dollars	Amortized Replace-ment Cost Million Dollars	Annual O & M Million Dollars	Total Annual Treatment Cost Million Dollars
M&I PLANTS					
Port Huron (IPCT)	10.93	.642	.137	1.466	2.245
Detroit (AWT)	385.3	22.758	.780	42.632	66.170
Monroe (AWT)	33.32	1.969	.113	3.065	5.147
Wyandotte (AWT)	68.1	4.024	.186	8.156	12.366
STORMWATER PLANTS					
Ypsilanti (IPCT)	73.80	4.361	.095	3.346	7.802
Plymouth (IPCT)	73.80	4.361	.095	3.346	7.802
Macomb Co. (IPCT)	181.50	10.725	.197	8.312	19.234
STORM & M&I PLANTS					
Huron River (IPCT)	493.3	29.137	1.835	35.059	66.031
East China (IPCT)	57.73	3.412	.207	2.992	6.611
Adrian-Tecumseh (IPCT)	11.3	.671	.036	.839	1.546
SLUDGE DISPOSAL SITES					
Lenawee Co. (2402)	11.7	.691	.120	2.017	2.828
St. Clair Co. (1141)	6.47	.382	.079	1.127	1.588
M&I TRANSMISSION LINES					
St. Clair Co. System	11.27	.665	--	.104	.769
Detroit System	42.52	2.512	--	--	2.512
Huron River System	157.55	9.305	--	.741	10.046
Adrian System	3.50	.207	--	.017	.224
STORMWATER COLLECTION & STORAGE SYSTEM	2561.62	151.290	--	6.422	157.712
TOTAL SYSTEM COSTS	4183.71	247.112	3.880	119.641	370.633

Lines, and Stormwater Collection & Storage Systems. Further divisions are made within the section to include the costs of treatment plants and other facilities at specific locations. Detailed cost analysis of these facilities can be found in Addendum A to this Appendix. The costs are presented on an interest rate of 5-1/2 percent and a design life of the project of 50 years.

The average annual cost of this alternative is lower than the costs of the other two Representative Plans with a total average annual cost of $370.6 million. Based on a total average annual wastewater load of 750 billion gallons, this cost is about 49.4 cents per thousand gallons of wastewater treated.

Resource Requirements

A land use summary for Representative Plan 1 is presented in Table VIII-3. Land would be required for wastewater treatment plants, sludge disposal areas, and stormwater storage facilities. Land requirements are given for each significant facility or system. At existing treatment plants, where up-grading would take place, the acreage shown is the additional land which would be needed to expand the facility. Stormwater storage facilities would comprise the bulk of the land requirement since the majority of them would be above ground structures.

TABLE VIII-3
LAND USE SUMMARY
REPRESENTATIVE PLAN ONE

Facility	Land (Acres)	Land Use
Port Huron Plant	No Additional Land Required	Wastewater Treatment Plant
East China Plant	80	Wastewater Treatment Plant
Macomb County Plant	160	Stormwater Treatment Plant
Plymouth Plant	85	Stormwater Treatment Plant
Ypsilanti Plant	85	Stormwater Treatment Plant
Detroit Plant	320*	Wastewater Treatment Plant
Wyandotte Plant	100*	Wastewater Treatment Plant
Huron River Plant	350	Wastewater Treatment Plant
Monroe Plant	50*	Wastewater Treatment Plant
Adrian-Tecumseh Plant	20	Wastewater Treatment Plant
St. Clair Co. Landfill	1,141	Sanitary Landfill of Sludge, Ash and Storm Solids.
Lenawee Co. Landfill	2,402	Same as Above
Storm Collection & Storage System	23,500	Underground and Surface Storage Reservoirs
TOTAL	28,073	

*In addition to existing plant site.

Table VIII-4 presents a breakdown of the chemical and energy requirements for Representative Alternative One. The peak electrical power demand would occur at intermittent periods corresponding to peak stormwater pumping periods. It is possible that additional power facilities would

TABLE VIII-4
ENERGY AND CHEMICAL REQUIREMENTS
REPRESENTATIVE PLAN ONE

	ELECTRICAL POWER		CHLORINE		LIME		METHANOL	NATURAL GAS	FUEL OIL	DIESEL FUEL
	Peak MW	Average MW	Maximum T/D	Average T/D	Maximum T/D	Average T/D	Average T/D	Average MCF/D*	Average 100 G/D	Average GAL/D
Port Huron	1.6	1.6	24.8	12.4	22	18	--	175	11.9	18
East China	7.9	3.1	28.4	10.8	115	39	--	182	12.4	36
Macomb Co.	30.0	9.4	175.0	51.0	425	123	--	2036	145.2	36
Detroit	132.6	132.6	30.0	30.0	633	633	118	14,364	1054.8	601
Ypsilanti	12.0	3.8	28.0	8.1	160	46	--	975	69.6	30
Plymouth	12.0	3.8	28.0	8.1	160	46	--	975	69.6	30
Huron River	69.2	36.4	706.0	292.0	1072	496	--	9971	711.8	483
Monroe	7.4	7.4	1.5	1.5	31	31	4.0	1700	121.4	20
Adrian - Tecumseh	1.3	1.1	14.6	7.3	33	22	--	41	2.9	66
Wyandotte	22.0	22.0	4.6	4.6	98	98	18	2871	204.9	144
Storm Collection & Storage System										

have to be built to meet this peak demand. Average electrical power demands would be required for the normal operation of the municipal-industrial wastewater facilities. This power demand could be met by existing generating facilities.

Natural gas or fuel oil would be required primarily for sludge incineration. The figures presented in the table indicate the amount of fuel required if either source would be used. Diesel fuel would be required primarily for transportation of sludge ash to disposal sites.

Chemical requirements would vary on the type of treatment being employed at each site. Lime would be required at all plants for the two stage lime clarification process. Chlorine would be required at all plants for disinfection and at IPCT facilities for removal of ammonia by breakpoint chlorination. Methanol would be required at AWT plants for the nitrification-denitrification process.

The manpower requirements for Representative Plan 1 are presented in Table VIII-5 and are divided into various labor categories for more complete analysis. The estimated work force required at the municipal-industrial wastewater treatment plants is considered adequate to operate the proposed plants at the specified design flows. Smaller initial work forces would be required at most plants except Detroit. The work force required to operate and maintain the stormwater treatment plants was estimated to be adequate to operate the plants at 50 percent of the maximum design capacity. Overtime work and additional employment, on a temporary basis, would be required during the wettest months of the year and during years of above average rainfall.

TABLE VIII-5
MANPOWER REQUIREMENTS
REPRESENTATIVE PLAN ONE

	SUPERINTENDENTS & SUPERVISORS	FOREMAN	OPERATORS	ELECTRICIANS	MAINTENANCE MECHANIC	LABORATORY TECHNICIANS	LABORERS	OTHER	TOTAL MANPOWER
Port Huron	1	1	17	1	4	2	8	1	35
East China	4	7	49	5	8	5	24	5	105
Macomb Co.	6	24	115	12	19	9	60	8	253
Detroit	23	130	722	64	80	46	300	19	1384
Plymouth	4	10	51	7	9	1	27	5	114
Ypsilanti	4	10	51	7	9	1	27	5	114
Wyandotte	8	24	113	10	14	8	50	5	232
Huron River	13	68	331	39	56	25	175	19	726
Monroe	5	9	50	4	9	6	20	3	106
Adrian - Tecumseh	1	1	17	1	4	2	7	1	34
Lenawee Co. Fill	1	2	15	--	--	--	1	1	20
St. Clair Co. Fill	1	3	37	--	--	--	2	1	44
Storm Collection & Storage System	2	10	50	--	--	--	20	--	82
TOTAL MANPOWER	73	299	1618	148	212	105	721	73	3249

REPRESENTATIVE PLAN 2

Representative Plan 2 proposes plant type treatment for a major portion of the region's wastewater. Land irrigation, however, is proposed as the treatment method to be used in less urbanized portions of the study area. Representative Plan 2 is a refinement of Combination Wastewater

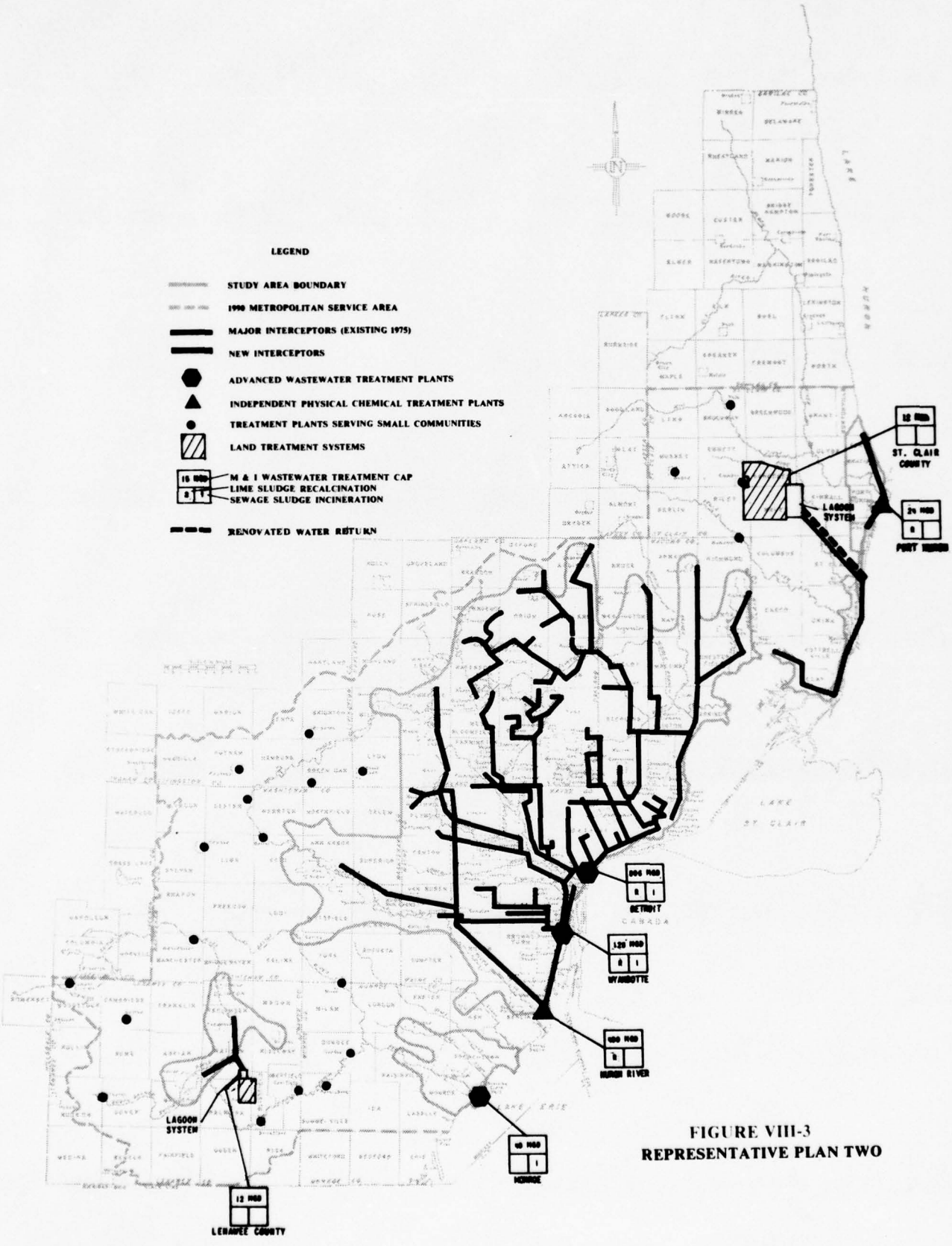

FIGURE VIII-3
REPRESENTATIVE PLAN TWO

Treatment Alternative Three formed by proposing an IPCT plant at Port Huron rather than an AWT plant and by changing the proposed method of sludge treatment to incineration. Eight regional plants and two regional land irrigation treatment systems would be utilized for treatment of municipal and industrial wastes and urban storm runoff. Small communities outside of the regional service area would operate individual treatment plants until growth would warrant extension of the regional interceptors.

Five of the regional plants would handle municipal and industrial wastewater. Existing wastewater treatment plants located in Detroit (W. Jefferson Avenue), Wyandotte and Monroe would be upgraded using advanced wastewater treatment processes. The existing wastewater treatment plant in Port Huron would be converted to an independent physical-chemical treatment process since the additional land which would be required for addition of advanced wastewater treatment processes to the existing secondary plant would not be easily acquired. A new regional plant utilizing the independent physical-chemical treatment process would be constructed near the Huron River in Monroe County. Wastewater from Southern St. Clair County and central Lenawee County would be treated in two land irrigation systems. In each system the wastewater would be treated in aerated lagoons, disinfected then irrigated on farm lands owned and managed by the operating agency.

Most of the interceptor sewer system necessary for this plan will already be in place by 1985. The additional major interceptor construction necessary for implementation of this plan would include: an interceptor along the shoreline in southern St. Clair County to East China and west to the lagoon site, an interceptor along the Detroit River to the Huron River Plant, an interceptor from Ann Arbor following the Huron River to its mouth and an interceptor following Hannan Road north of the Huron River.

The system designed for handling combined sewer overflow and urban storm runoff would be essentially independent of the municipal-industrial wastewater treatment system. The stormwater system would utilize forty-nine community storage reservoirs ranging in size from 80 to 690 acres. These and two regional reservoirs of 3,120 acres each would be used for temporary storage of peak storm flows. Treatment of collected stormwater would be carried out at six facilities. Two of the facilities utilizing the IPCT process would be at the location of regional storage reservoirs in Monroe (collocated with Huron River M & I plant) and Macomb Counties. Two additional IPCT plants would be located on the Rouge River at Plymouth and on the Huron River south of Belleville Lake. The previously mentioned land irrigation systems in St. Clair and Lenawee Counties would also be utilized for stormwater treatment.

An extensive system of interceptors and tunnels would be required to collect storm runoff and combined sewer overflows at the present points of discharge to surface waters. Normal sewer construction techniques would be utilized in less urbanized areas; however, the greater size of sewer and the construction problems encountered in highly urbanized areas made design of hard rock tunnels necessary. A summary of some design and cost data for the areas selected appears in Table VIII-5A.

Sludge Handling and Disposal

Table VIII-6 presents the sludge handling and disposal data for Representative Plan 2. Sludges generated at wastewater treatment plants would be incinerated to reduce the amount of land required for landfill and to reduce the health hazards related to sludge handling. The limited availability of suitable landfill sites in Southeastern Michigan and the resultant land savings overshadows the additional energy requirements and potential air pollution factors of instituting incineration. All sludges from lime clarification processes would be recalcined both to reclaim the lime and to reduce the volume of waste sludge.

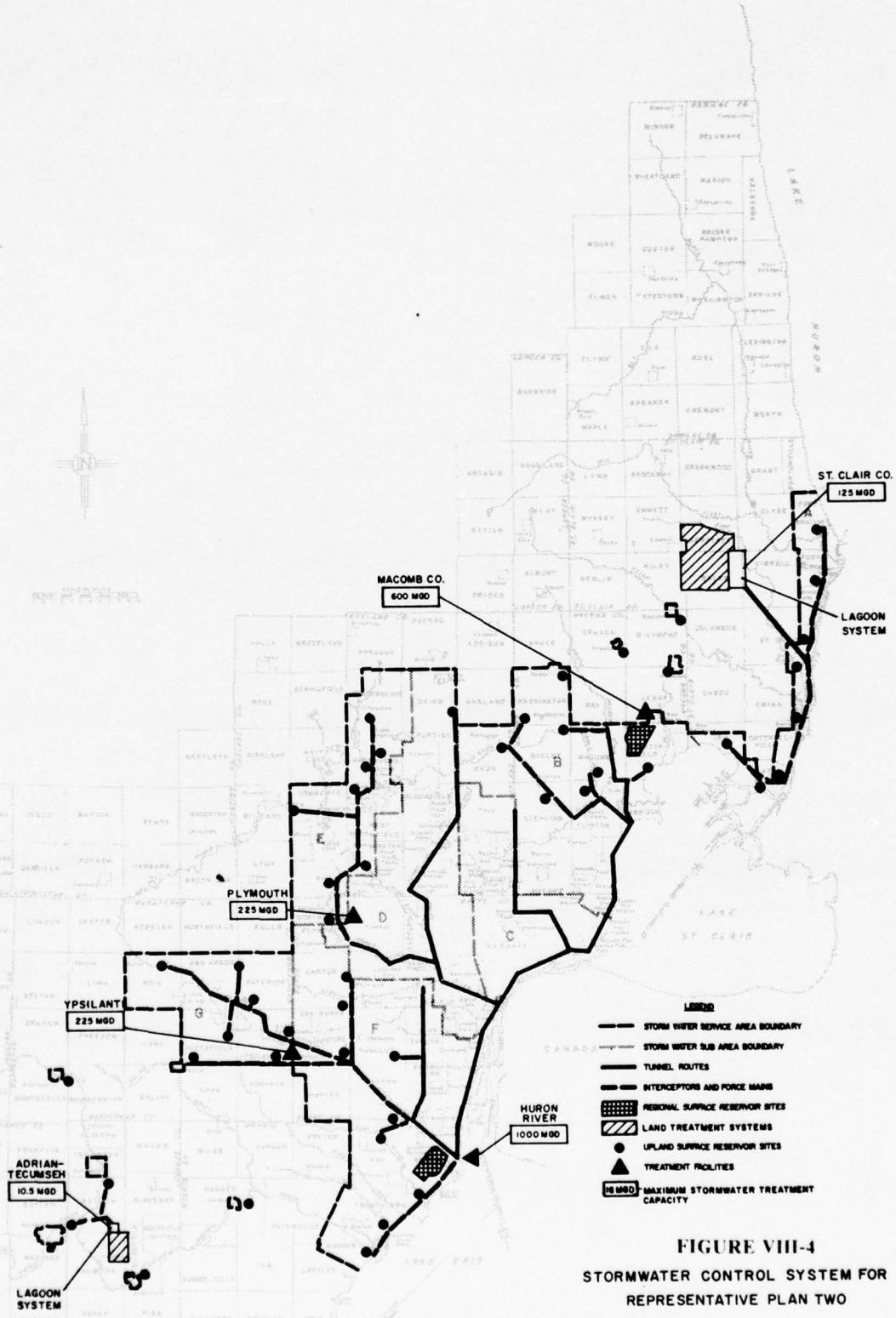

FIGURE VIII-4

STORMWATER CONTROL SYSTEM FOR REPRESENTATIVE PLAN TWO

TABLE VIII - 5A

Representative Plan 2

Summary Data For St. Clair and Lenawee
County Irrigation Areas

Design Flow	St. Clair Co.	Lenawee Co.
Maximum Annual - Million Gallons	32,120	6,720
- Acre Inches	1,185,000	247,300
Average Annual - Million Gallons	16,800	5,440
- Acre Inches	618,700	200,300
Type of Crop Grown	Forage	Forage
Control of Agriculture Operations	Agency	Agency
Annual Application Rate - inches/year	70	70
Land Required - acres	19,780	3,960
System Costs		
Capital Cost	$43,400,000	$10,000,000
Ammortized Capital Cost	$ 2,562,000	$ 591,000
Annual O&M Cost	$ 1,525,000	$ 345,000
Total Annual Cost	$ 4,087,000	$ 936,000

TABLE VIII-6

SLUDGE HANDLING AND DISPOSAL DATA REPRESENTATIVE PLAN TWO

	DESIGN TREATMENT CAPACITY						
	STORM RUNOFF (MGD)	MUNICIPAL-INDUSTRIAL (MGD)	SEWAGE SLUDGE INCINERATION (Tons/Day)	LIME SLUDGE RECALCINATION (Tons/Day)	ACT. CARBON REGENERATION (Tons/Day)	SANITARY LANDFILL (Tons/Day)	LAND APPLICATION OF SLUDGE (Tons/Day)
Port Huron Plant	--	24 IPCT	--	72	9	27	--
St. Clair Co. Lagoon & Irrigation System	125 Land	12 Land	--	--	--	--	10
Macomb Co. Plant	600 IPCT	--	--	1226	75	72	--
Detroit Plant	--	806 AWT	620	895	100	520	--
Ypsilanti Plant	225 IPCT	--	--	600	28	31	--
Plymouth Plant	225 IPCT	--	--	600	28	31	--
Huron River Plant	1000 IPCT	400 AWT	--	2500	265	692	--
Wyandotte Plant	--	125 AWT	274	139	16	81	--
Monroe Plant	--	40 AWT	28	--	5	5	--
Lenawee County Lagoon & Irrigation System	10.5 Land	12 Land	--	--	--	--	10

Sludges from the St. Clair and Lenawee County treatment lagoons would be applied to the land at special sludge disposal sites adjacent to the lagoons. The solids which would accumulate in stormwater storage lagoons would be removed periodically and disposed of in a landfill.

System Costs

The system costs for Representative Plan 2 are presented in Table VIII-7. The costs are divided into seven categories according to the function of the facility. These areas include: Municipal-Industrial (M & I) Plants, Stormwater Plants, Storm & M & I Plants, Lagoon and Land Irrigation Systems, Sludge Landfill Sites, M & I Transmission Lines, and Stormwater Collection & Storage Systems. Further divisions are made within the section to include the costs of treatment plants and other facilities at specific locations. Detailed cost analysis of these facilities can be found in Addendum A to this Appendix.

TABLE VIII-7

SUMMARY COST SHEET

REPRESENTATIVE PLAN TWO

	Const. Cost Million Dollars	Amortized Const. Cost Million Dollars	Amortized Replacement Cost Million Dollars	Annual O & M Million Dollars	Total Annual Treatment Cost Million Dollars
M & I PLANTS					
Port Huron (IPCT)	10.93	.642	.137	1.466	2.245
Detroit (AWT)	385.3	22.758	.780	42.632	66.170
Monroe (AWT)	33.32	1.969	.113	3.065	5.147
Wyandotte (AWT)	68.1	4.024	.186	8.156	12.366
STORMWATER PLANTS					
Ypsilanti (IPCT)	73.8	4.361	.095	3.346	7.802
Plymouth (IPCT)	73.8	4.361	.095	3.346	7.802
Macomb Co. (IPCT)	181.5	10.725	.197	8.312	19.234
STORM & M & I PLANTS					
Huron River (IPCT)	493.3	29.137	1.835	35.059	66.031
LAGOON & LAND IRRIGATION SYSTEMS					
St. Clair County Lagoon System and Sludge Application	26.94	1.591	.167	1.558	3.316
St. Clair County Irrigation & Drainage	43.38	2.562	-	1.525	4.087
Lenawee Co. Lagoon System and Sludge Application	13.38	.790	.026	.358	1.174
Lenawee County Irrigation & Drainage	10.00	.591	-	.345	.936
SLUDGE LANDFILL SITES					
Lenawee County	11.28	.666	.117	1.915	2.698
St. Clair County	6.15	.363	.077	1.077	1.517
M & I TRANSMISSION LINES					
St. Clair Co. System	55.34	3.268	.233	.747	4.248
Detroit System	42.52	2.512	-	-	2.512
Huron River System	157.55	9.305	-	.741	10.046
Lenawee Co. System	5.26	.311	.008	.044	.363
Marysville to Pt. Huron	3.42	.202	-	.032	.234
STORMWATER COLLECTION & STORAGE SYSTEM	2561.62	151.290	-	6.422	157.712
TOTAL SYSTEM COSTS	4256.89	251.428	4.066	120.146	375.640

The costs were calculated on an interest rate of 5-1/2 percent and a design life of the project of 50 years. The total average annual cost is $375.6 million. Based on a total average annual wastewater load of 750 billion gallons, this cost is about 50.0 cents per thousand gallons treated.

Resource Requirements

A land use summary for Representative Plan 2 is presented in Table VI II-8. Land would be required for treatment plants, stormwater storage facilities, landfill sites, and land treatment sites. Land requirements are given for each significant facility or system. The land which would be needed for each treatment plant would depend on the final plant layout and the topography and size of the tract available. At existing treatment plants, where upgrading would take place, the acreage shown is the additional land which would be needed to expand the facility.

TABLE VIII-8

LAND USE SUMMARY

REPRESENTATIVE PLAN TWO

Facility	Land (Acres)	Land Use
Port Huron Plant	No Additional Land Required	Wastewater Treatment Plant
St. Clair Co. Land Treatment System	2,226	Wastewater Treatment and Storage Lagoons
	350	Land Application of Sewage Sludge
	19,780	Irrigation of Treated Wastewater
Macomb Co. Plant	160	Stormwater Treatment Plant
Plymouth Plant	85	Stormwater Treatment Plant
Ypsilanti Plant	85	Stormwater Treatment Plant
Detroit Plant	320*	Wastewater Treatment Plant
Wyandotte Plant	100*	Wastewater Treatment Plant
Huron River Plant	350	Wastewater Treatment Plant
Monroe Plant	50*	Wastewater Treatment Plant
Lenawee Co. Land Treatment System	465	Wastewater Treatment & Storage Lagoons
	350	Land Application of Sewage Sludge
	3,960	Irrigation of Treated Wastewater
St. Clair Co. Landfill	1,073	Sanitary Landfill of Sludge, Ash and Storm Solids
Lenawee Co. Landfill	2,338	Same as Above
Storm Collection	23,500	Underground and Surface Storage Reservoirs
TOTAL	55,192	

*In addition to existing plant site.

The most significant amount of land required for this alternative would be for stormwater storage facilities and land treatment facilities. Stormwater storage in above ground facilities would require the direct use of large amounts of land and would have little or no alternate uses. Land treatment facilities such as treatment and storage lagoons and irrigation facilities would require a large amount of land due to seasonal operations and application considerations.

The chemical and energy requirements for this alternative are presented in Table VIII-9. Peak electrical power demand would be most significant for the stormwater collection and storage system. Peak power would be required at intermittent periods to provide pumping capacities sufficient to evacuate the tunnels during major storms. Additional power facilities might have to be built to meet these demands. Average electrical power demands would be required for normal operation of the municipal-industrial treatment plants and irrigation facilities. These requirements would be met by existing power systems.

TABLE VIII-9
ENERGY AND CHEMICAL REQUIREMENTS
REPRESENTATIVE PLAN TWO

	ELECTRICAL POWER		CHLORINE		LIME		METHANOL	NATURAL GAS	FUEL OIL	DIESEL OIL
	Peak MW	Average MW	Maximum T/D	Average T/D	Maximum T/D	Average T/D	Average T/D	Average MCF/D*	Average 100 G/D	Average GAL/D
Port Huron	1.6	1.6	24.8	12.4	22	18	--	175	12	18
St. Clair Co. Land System	43.6	25.4	7.8	2.7	--	--	--	--	--	133
Macomb Co.	30.0	9.4	175.0	51.0	425	123	--	2036	145	36
Detroit	132.6	132.6	30.0	30.0	633	633	118	14,364	1055	601
Ypsilanti	12.0	3.8	28.0	8.1	160	46	--	975	70	30
Plymouth	12.0	3.8	28.0	8.1	160	46	--	975	70	30
Huron River	69.2	36.4	706.0	292.0	1072	496	--	9971	712	483
Monroe	7.4	7.4	1.5	1.5	31	31	4	1700	121	20
Wyandotte	22.0	22.0	4.6	4.6	98	98	18	2871	205	144
Lenawee Co. Land System	6.0	3.8	1.6	0.9	--	--	--	--	--	25
Storm Collection & Storage System	1868.5	43.4	--	--	--	--	--	--	--	1600
TOTAL	2204.9	289.6	1007.3	411.3	2601	1491	140	33,067	2390	3120

Natural gas or fuel oil would be required primarily for sludge incineration. The figures presented in the table indicate the amount of fuel required if either source would be used. Diesel fuel would be required primarily for transportation of sludge ash to disposal sites.

Chemical requirements would vary on the type of treatment being employed at each site. Lime would be required at all treatment plants for the two stage lime clarification process. Chlorine would be required at all plants and at treatment lagoons for the disinfection. Additional chlorine demand would arise at IPCT facilities for removal of ammonia by the breakpoint chlorination process. Methanol would be required at AWT plants for the nitrification-denitrification process.

The manpower requirements for Representative Plan 2 are presented in Table VIII-10. The manpower estimate has been broken down into various labor categories for a more complete analysis. The estimated workforce required at the municipal-industrial plants is considered adequate to operate the plans at their specified design flows. The work force required to operate and maintain the stormwater treatment plants was estimated to be adequate to operate the plants at 50 percent of the maximum design capacity. Overtime work and additional employment, on a temporary basis, would be required during the wettest months of the year and during years of above average rainfall.

The labor estimate does not include manpower estimates for farming operations at land treatment sites. For planning purposes the cost of farm operation, exclusive of irrigation operations, has been assumed to be about equal to the field value of the farm products being grown. All farm operations would be contracted, including disposal of crops, and the resulting sales would provide for payment of these operations. Estimates for maintenance of the irrigation facilities has been included in the table.

TABLE VIII-10
MANPOWER REQUIREMENTS
REPRESENTATIVE PLAN TWO

	SUPERINTENDENTS & SUPERVISORS	FOREMEN	OPERATORS	ELECTRICIANS	MAINTENANCE MECHANIC	LABORATORY TECHNICIANS	LABORERS	OTHER	TOTAL MANPOWER
Port Huron	1	--	17	1	4	2	8	1	35
St. Clair Co. Land Treatment System	2	7	21	8	8	4	24	0	74
Macomb Co.	6	24	115	12	19	9	60	8	253
Detroit	23	130	722	64	80	46	300	19	1384
Plymouth	4	10	51	7	9	1	27	5	114
Ypsilanti	4	10	51	7	9	1	27	5	114
Wyandotte	8	24	113	10	14	8	50	5	232
Huron River	13	68	331	39	56	25	175	19	726
Monroe	5	9	50	4	9	6	20	3	106
Lenawee Co. Land Treatment System	1	0	4	1	1	1	5	—	13
Lenawee Co. Landfill	1	3	37	--	--	--	2	1	20
St. Clair Co. Landfill	1	2	15	--	--	---	1	1	44
Storm Collection & Storage System	2	10	50	--	—	--	20	—	82
TOTAL MANPOWER	71	299	1577	153	209	103	719	67	3197

REPRESENTATIVE PLAN 3

Representative Plan 3 proposes plant type treatment for a major portion of wastewater from the region. Land treatment would be used, however, for wastewater from less urbanized portions of the study area. Representative Plan 3 was also formed from Combination Wastewater Treatment Alternative Three. Again the Port Huron plant would be an IPCT facility rather than an AWT plant and the sludge treatment method would include incineration. In addition, the land treatment systems proposed at St. Clair and Lenawee Counties would utilize the new land management scheme which allows the farmer to retain ownership of his land. Eight regional plants and two regional land irrigation treatment systems would be utilized for treatment of municipal and industrial wastes and urban storm runoff. Small communities outside of the regional service area would operate individual treatment plants until growth would warrant extension of the regional interceptors.

Five of the regional plants would handle municipal and industrial wastewater. Existing wastewater treatment plants located in Detroit (W. Jefferson Avenue), Wyandotte and Monroe would be upgraded using advanced wastewater treatment processes. The existing wastewater treatment plant in Port Huron would be converted to an independent physical-chemical treatment process since the additional land which would be required for adding advanced wastewater treatment processes to the existing secondary plant would not be easily acquired. A new regional plant utilizing the independent physical-chemical treatment process would be constructed near the Huron River in Monroe County. Wastewater from southern St. Clair County and central Lenawee County would be treated in two land irrigation systems. In each system the wastewater would be treated in aerated lagoons, disinfected then distributed to nearby farmers for irrigation on their land.

Most of the interceptor sewer system necessary for this plan will already be in place by 1985. The additional major interceptor construction necessary for implementation of this plan would include: an interceptor along the shoreline in southern St. Clair County to East China and west to the lagoon site, an interceptor along the Detroit River to the Huron River Plant, an interceptor from Ann Arbor following the Huron River to its mouth and an interceptor following Hannan Road north of the Huron River.

The system designed for handling combined sewer overflow and urban storm runoff would be essentially independent of the municipal-industrial wastewater treatment system. The stormwater system would utilize forty-nine community storage reservoirs ranging in size from 80 to 690 acres. Those and two regional reservoirs of 3,120 acres each would be used for temporary storage of peak storm flows. Treatment of collected storm water would be carried out at six facilities. Two of the facilities utilizing the IPCT process would be at the location of regional storage reservoirs in Monroe (collocated with Huron River M & I plant) and Macomb Counties. Two additional IPCT plants would be located on the River Rouge at Plymouth and on the Huron River south of Belleville Lake. The previously mentioned land irrigation systems in St. Clair and Lenawee Counties would also be utilized for stormwater treatment.

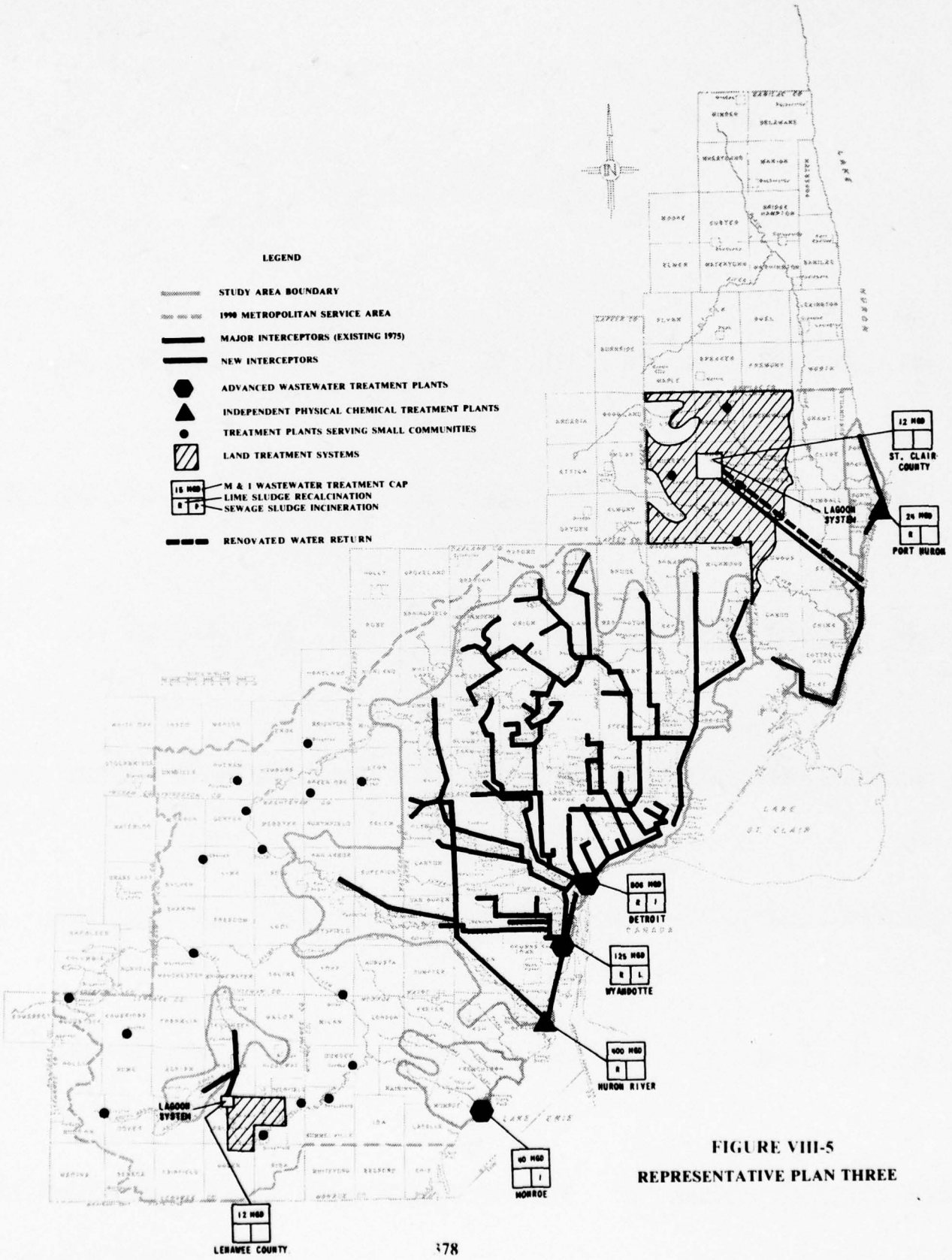

FIGURE VIII-5

REPRESENTATIVE PLAN THREE

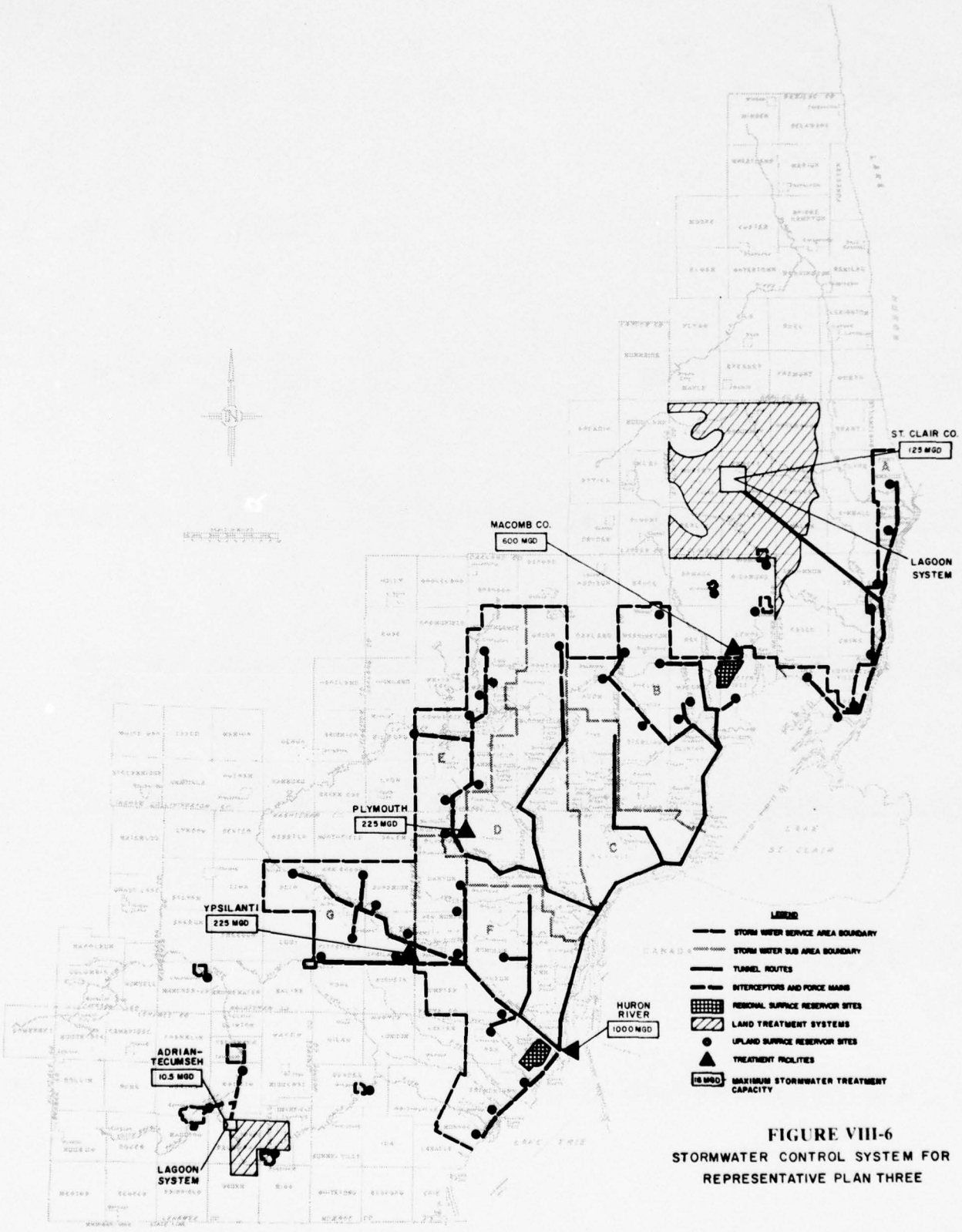

FIGURE VIII-6
STORMWATER CONTROL SYSTEM FOR REPRESENTATIVE PLAN THREE

Although the lagoon systems for both the Lenawee County and St. Clair County treatment systems are in different locations from those proposed in Representative Plan Two and Combination Wastewater Treatment Alternative Three, all design and cost information prepared for those alternatives would be pertinent for the new systems. The irrigation systems required for this plan had not been previously designed.

In the St. Clair County area soil association L in irrigation zone VI (see Chapter 7 and Dow Engineering report, Wastewater Irrigation Using Privately Owned Farmland in Southeastern Michigan) was selected due to the size of the area and the ability of the area to handle the entire flow. In Lenawee County soil association M in zone XVI was selected primarily due to its ability to accept the largest quantity of wastewater. A summary of some design and cost data for the areas selected appears in Table VIII - 10A.

TABLE VIII - 10A

Representative Plan 3

Summary of Data for St. Clair and Lenawee County Irrigation Areas

Design Flow	St. Clair Co.	Lenawee Co.
Maximum Annual - Million Gallons	32,120	6,720
- Acre Inches	1,185,000	247,300
Average Annual - Million Gallons	16,800	5,440
- Acre Inches	618,700	200,300
Type of Crop Grown	Cash or Forage	Cash or Forage
Control of Agricultural Operations	Individual	Individual
Annual Application Rate For Selected Soil-Acre-in./Acre-yr.	20.7	19.2
Land Required - Acres	57,200	12,880
System Costs		
Capital Cost	$172,580,000	$41,115,000
Ammortized Capital Cost	10,192,000	2,428,000
Annual O&M Cost	6,177,000	1,547,000
Total Annual Cost	16,369,000	3,975,000

An extensive system of interceptors and tunnels would be required to collect storm runoff and combined sewer overflows at the present points of discharge to surface waters. Normal sewer construction techniques would be utilized in less urbanized areas; however, the greater size of sewers required in highly urbanized areas and the construction problems encountered made design of hard rock tunnels necessary.

Sludge Handling and Disposal

Table VIII-11 presents the sludge handling and disposal data for this alternative. Sludges generated at wastewater treatment plants would be incinerated to reduce the amount of land required for landfill and to reduce the health hazards related to sludge handling. The limited availability of suitable landfill sites in Southeastern Michigan and the resultant land savings overshadows the additional energy requirements and the potential air pollution factors of employing incineration. All sludges from lime clarification processes would be recalcined to both reclaim the lime and reduce the volume of the waste sludge.

TABLE VIII-11

SLUDGE HANDLING AND DISPOSAL DATA REPRESENTATIVE PLAN THREE

	DESIGN TREATMENT CAPACITY						
	STORM RUNOFF (MGD)	MUNICIPAL-INDUSTRIAL (MGD)	SEWAGE SLUDGE INCINERATION (Tons/Day)	LIME SLUDGE RECALCINATION (Tons/Day)	ACT. CARBON REGENERATION (Tons/Day)	SANITARY LANDFILL (Tons/Day)	LAND APPLICATION OF SLUDGE (Tons/Day)
Port Huron Plant	--	24 IPCT	--	72	9	27	--
St. Clair Co. Lagoon & Irrigation System	125 Land	12 Land	--	--	--	--	10
Macomb Co. Plant	600 IPCT	--	--	1226	75	72	--
Detroit Plant	--	806 AWT	620	895	100	520	--
Ypsilanti Plant	225 IPCT	--	--	600	28	31	--
Plymouth Plant	225 IPCT	--	--	600	28	31	--
Huron River Plant	1000 IPCT	400 AWT	--	2500	265	692	--
Wyandotte Plant	--	125 AWT	274	139	16	81	--
Monroe Plant	--	40 AWT	28	--	5	5	--
Lenawee County Lagoon & Irrigation System	10.5 Land	12 Land	--	--	--	--	10

Sludges from the St. Clair and Lenawee County treatment lagoons would be applied to the land at special sludge disposal sites adjacent to the lagoons. The solids which would accumulate in stormwater storage lagoons would be removed periodically and disposed of in a landfill.

TABLE VIII-12

SUMMARY COST SHEET

REPRESENTATIVES PLAN THREE

	Const. Cost Million Dollars	Amortized Const. Cost Million Dollars	Amortized Replacement Cost Million Dollars	Annual O&M Million Dollars	Total Annual Treatment Cost Million Dollars
M&I PLANTS					
Port Huron (IPCT)	10.93	.642	.137	1.466	2.245
Detroit (AWT)	385.3	22.758	.780	42.632	66.170
Monroe (AWT)	33.32	1.969	.113	3.065	5.147
Wyandotte (AWT)	68.1	4.024	.186	8.156	12.366
STORMWATER PLANTS					
Ypsilanti (IPCT)	73.8	4.361	.095	3.346	7.802
Plymouth (IPCT)	73.8	4.361	.095	3.346	7.802
Macomb County (IPCT)	181.5	10.725	.197	8.312	19.234
STORM & M&I PLANTS					
Huron River (IPCT)	493.3	29.137	1.835	35.059	66.031
LAGOON & LAND IRRIGATION SYSTEMS					
St. Clair County Lagoon System and Sludge Application	26.94	1.591	.167	1.558	3.316
St. Clair County Irrigation & Drainage	172.58	10.192	--	7.093	17.285
Lenawee County Lagoon System and Sludge Application	13.38	.790	.026	.358	1.174
Lenawee County Irrigation & Drainage	48.90	2.888	--	1.962	4.850
SLUDGE LANDFILL SITES					
Lenawee County	11.28	.666	.117	1.915	2.698
St. Clair Counth	6.15	.363	.077	1.077	1.517
M&I TRANSMISSION LINES					
St. Clair County System	98.27	5.804	.547	1.687	8.038
St. Clair Irrigation to St. Clair River	29.68	1.753	--	.023	1.776
Detroit System	42.52	2.512	--	--	2.512
Huron River System	157.55	9.305	--	.741	10.046
Lenawee County System	5.26	.311	.008	.044	.363
Marysville to Pt. Huron	3.42	.202	--	.032	.234
STORMWATER COLLECTION & STORAGE SYSTEM	2561.62	151.290	--	6.422	157.712
TOTAL PROJECT COST	4497.6	265.644	4.380	128.294	398.318

System Costs

The system costs for Representative Plan 3 are presented in Table VIII-12. The costs are divided into seven categories according to the function of the facility. These categories include: Municipal-Industrial (M & I) Plants, Stormwater Plants, Storm & M & I PLants, Lagoon and Land Irrigation Systems, Sludge Landfill Sites, M & I Transmission Lines, and Stormwater Collection and Storage Systems. Further divisions are made within the section to include the cost of treatment plants and other facilities at specific locations. Detailed cost analysis of these facilities can be found in Addendum A to this Appendix.

The costs were calculated on an interest rate of 5-1/2 percent and a design life of the project of 50 years. The average annual cost of this alternative is greater than similar costs of the other two Representative Plans. The total average annual cost is $398.3 million. Based on a total average annual wastewater load of 750 billion gallons, this cost is about 53.1 cents per thousand gallons of wastewater treated.

Resource Requirements

A land use summary for Representative Plan 3 is presented in Table VIII-13. Land would be required for treatment plants, stormwater storage facilities, landfill sites, and land treatment sites. Land requirements are given for each significant facility or system. The land which would be needed for each treatment plant would depend on the final plant layout and the topography and size of the tract available. At existing treatment plants where upgrading would take place, the acreage shown is the additional land which would be needed to expand the facility.

The most significant amount of land required for this alternative would be for land irrigation of treated wastewater. This land would not be purchased but would continue in present ownership and remain in agricul-

TABLE VIII-13

LAND USE SUMMARY

REPRESENTATIVE PLAN THREE

Facility	Land (Acres)	Land Use
Port Huron Plant	No Additional Land Required	Wastewater Treatment Plant
St. Clair Co. Land Treatment System	2,226	Wastewater Treatment and Storage Lagoons
	350	Land Application of Sewage Sludge
	57,200**	Irrigation of Treated Wastewater
Macomb Co. Plant	160	Stormwater Treatment Plant
Plymouth Plant	85	Stormwater Treatment Plant
Ypsilanti Plant	85	Stormwater Treatment Plant
Detroit Plant	320*	Wastewater Treatment Plant
Wyandotte Plant	100*	Wastewater Treatment Plant
Huron River Plant	350	Wastewater Treatment Plant
Monroe Plant	50*	Wastewater Treatment Plant
Lenawee Co. Land Treatment System	465	Wastewater Treatment & Storage Lagoons
	350	Land Application of Sewage Sludge
	15,320**	Irrigation of Treated Wastewater
St. Clair Co. Landfill	1,073	Sanitary Landfill of Sludge, Ash and Storm Solids
Lenawee Co. Landfill	2,338	Same as Above.
Storm Collection	23,500	Underground and Surface Storage Reservoirs
TOTAL (Purchased Land)	31,452	

*In addition to existing plant size

** Land to Continue in Present Ownership

Total ** 72,520

tural use. The stormwater storage system would require the most amount of purchased land since, unlike the land required for irrigation, the land required for stormwater storage would significantly change the land use of the area. The wastewater treatment and storage lagoons in St. Clair and Lenawee Counties would also require a significant amount of purchased land due to seasonal operations and application considerations.

The chemical and energy requirements for this alternative are presented in Table VIII-14. Peak electrical power demand would be most significant for the stormwater collection and storage system. Peak power would be required at intermittent periods to provide pumping capacities sufficient to evacuate the tunnels during major storms. Additional power facilities

TABLE VIII-14
ENERGY AND CHEMICAL REQUIREMENTS
REPRESENTATIVE PLAN THREE

	ELECTRICAL POWER		CHLORINE		LIME		METHANOL	FUEL ** OIL	NATURAL ** GAS	DIESEL OIL
	Peak MW	Average MW	Maximum T/D	Average T/D	Maximum T/D	Average T/D	Average T/D	Average 100 G/D	Average MCF/D*	Average G/D
Port Huron	1.6	1.6	24.8	12.4	22	18	--	12	175	18
St. Clair Co. Land System	36.7	21.3	4.5	2.9	--	--	--	--	--	133
Macomb Co.	30.0	9.4	175.0	51.0	425	123	--	145	2036	36
Detroit	132.6	132.6	30.0	30.0	633	633	118	1055	14,364	601
Ypsilanti	12.0	3.8	28.0	8.1	160	46	--	70	975	30
Plymouth	12.0	3.8	28.0	8.1	160	46	--	70	975	30
Huron River	69.2	36.4	706.0	292.0	1072	496	--	712	9971	483
Monroe	7.4	7.4	1.5	1.5	31	31	4	121	1700	20
Wyandotte	22.0	22.0	4.6	4.6	98	98	18	205	2871	144
Lenawee Co. Land System	5.9	3.3	0.8	0.5	--	--	--	--	--	25
Storm Collection & Storage System	1868.5	43.4	--	--	--	--	--	--	--	1600
TOTAL	2197.9	285.0	1003.2	411.1	2601	1491	140	2390	33,067	3120

might have to be built to meet these demands. Average electrical power demands would be required for normal operation of the municipal-industrial treatment plants and irrigation facilities. These requirements would be met by existing power systems.

Natural gas or fuel oil would be required primarily for sludge incineration. The figures presented in the table indicate the amount of fuel required if either source would be used. Diesel fuel would be required primarily for transportation of sludge ash to disposal sites.

Chemical requirements would vary on the type of treatment being employed at each site. Lime would be required at all treatment plants for the two stage lime clarification process. Chlorine would be required at all plants and at treatment lagoons for the disinfection. Additional chlorine demand would arise at IPCT facilities for removal of ammonia by the breakpoint chlorination process. Methanol would be required at AWT plants for the nitrification-denitrification process.

The manpower requirements for Representative Plan 3 are presented in Table VIII-15. The manpower estimate has been broken down into various labor categories for a more complete analysis. The estimated workforce required at the municipal-industrial plants is considered adequate to operate the plants at their specified design flows. The work force required to operate and maintain the stormwater treatment plants was estimated to be adequate to operate the plants at 50 percent of the maximum design capacity. Overtime work and additional employment, on a temporary basis, would be required during the wettest months of the year and during years of above average rainfall.

The labor estimate does not include manpower estimates for farming operations at land treatment sites. For planning purposes the cost of farm operation, exclusive of irrigation operations, has been assumed to be about equal to the field value of the farm products being grown. All farm operations would be contracted, including disposal of crops, and the resulting sales would provide for payment of these operations. Estimates for maintenance of the irrigation facilities has been included in the table.

TABLE VIII-15
MANPOWER REQUIREMENTS
REPRESENTATIVE PLAN TWO

	SUPERINTENDENTS & SUPERVISORS	FOREMEN	OPERATORS	ELECTRICIANS	MAINTENANCE MECHANIC	LABORATORY TECHNICIANS	LABORERS	OTHER	TOTAL MANPOWER
Port Huron	1	1	17	1	4	2	8	1	35
St. Clair Co. Land Treatment System	1	1	10	3	3	14	8	0	40
Macomb Co.	6	24	115	12	19	9	60	8	253
Detroit	23	130	722	64	80	46	300	19	1384
Plymouth	4	10	51	7	9	1	27	5	114
Ypsilanti	4	10	51	7	9	1	27	5	114
Wyandotte	8	24	113	10	14	8	50	5	232
Huron River	13	68	331	39	56	25	175	19	726
Monroe	5	9	50	4	9	6	20	3	106
Lenawee Co. Land Treatment System	—	1	3	2	2	2	3	—	13
Lenawee Co. Landfill	1	3	37	--	—	—	2	1	20
St. Clair Co. Landfill	1	2	15	--	--	--	1	1	44
Storm Collection & Storage System	2	10	50	--	--	--	20	--	82
TOTAL MANPOWER	69	293	1565	149	205	114	701	67	3163

Phasing and Implementation

Although the Interim Water Quality Plan was designed to achieve the 1983 objectives and the Representative Plans were designed to approach the 1985 objectives of Public Law 92-500, each plan could be implemented so that interim objectives of the law could be met. However, it must be recognized that the implementation of the Interim Water Quality Plan would preclude the implementation of any of the Representative Plans by the specified date of 1985. If the Interim Plan was selected for implementation, any one of the Representative Plans could be achieved and many of the facilitites from the Interim Plan could be used but additional time (up to 15 years) would be required for implementation. It is most probable however that revisions would be made or a new plan would be designed if the Interim Plan was selected and a higher degree of treatment was to be met at a later date. Since planning is a continuous process, this is a logical assumption.

Construction sequencing will be an important factor in achieving the interim and final objectives on schedule. The phasing of construction and facility start-up will control the flow of money in the project. The structuring of the construction and start-up or phasing and implementation program for each alternative plan will facilitate the examination of comparative economic costs.

Priorities and Policies

Sequencing of construction and start-up is controlled by: interim water quality objectives, funding schedules and construction practicality. The following is a list of some of the more important priorities and policies:

a. Construction program to commence on 1 January 1975.

b. Construction of the Interim Plan to be complete by 1 July 1983 and Representative Plans by 1 January 1985.

c. 1977 and 1983 objectives of the law to be met.

d. Premature investment of capital to be avoided by construction sequencing.

e. Pilot plant study to be employed prior to final facility design.

f. Combined sewer service areas to be given priority in construction of the stormwater management system.

g. Stormwater storage facilities to have priority over stormwater treatment.

h. Soil erosion to be controlled in rural and outer suburban areas by use of good land management practices.

Procedure

The phasing of the various plans applies to only those new treatment systems or components that would be added to the base (1975) system. Construction costs include the capital investments needed to build facilities required to achieve the relevant water quality objectives within the legal schedule. As newly constructed facilities are placed in operation, their appropriate O and M and replacement costs commence. O and M costs for those components in place by 1975 are not included or considered prior to this date. When an existing component is incorporated into a proposed system and additional processes are added after 1975, to achieve the appropriate water quality objectives, the entire O and M costs (for both new and old processes) are included in the phasing costs.

Two constraints are imposed on the phasing and implementation programs in order to facilitate the comparison of impacts caused by the alternatives. First, the construction schedule and the start-up schedule for a given system are identical for all alternatives and are specified by total construction capital expended versus time and by percentage of 1990 capacity placed in operation versus time, respectively. Second, the percentage of total construction capital expended versus time is held to a uniform rate. The above two constraints are compatible with logical implementation programs for each of the alternatives and provide, at the same time, for an effective and efficient comparison of impacts of the alternatives.

A third constraint, or freedom from constraint in this case, is that construction capital funds are available appropriate to the phasing selected.

The programs for the Representative Plans, Nos. one, two and three are in Tables VIII-16 to VIII-27. In explanation of these tables:

Column 1 is the capital cost, that is the cost of constructing the separate members that are listed and comprise the regional system.

Column 2 is the required expenditure each year for ten years to build the entire system in the interval 1975 to 1985.

Column 3 shows the present worth of the sums required for the disbursements each year in Column 2; that is these amounts posted at the beginning of 1975 would generate at the specified percent the sums necessary for each 10 year of construction payment.

Column 4 gives the payments that must be made each year for 50 years to amortize the construction capital costs which in turn are paid from the sums generated by the present worth amounts shown in Column 2.

The totals for the separate members are shown at the bottom; the total expenditure over 50 years is also shown at the bottom of Column 4.

TABLE VIII-16

REPRESENTATIVE PLAN ONE-CAPITAL COST, YEARLY EXPENDITURES, PRESENT WORTH AND AVERAGE ANNUAL COST IN $1,000,000

INTEREST RATE: 5%

COLUMN	1	2	3	4
System	Capital Cost	Yearly Expenditure 1975 to 1985	P.W. of Yearly Expenditures @ 5% - 1975-1985 Col. 2x7.722	Average Annual Cost 50 Yrs @ 5% Col. 3x0.054777
Wastewater Treatment Plants	1,389.08	138.91	1,072.66	58.75
Wastewater Interceptors and Transmission Lines	214.61	21.46	165.71	9.07
Stormwater Collection Storage and Transmission	2,561.60	256.16	1,978.06	108.35
Landfill Sites				
St. Clair County	6.47	0.647	4.99	0.27
Lenawee County	11.7	1.17	9.03	0.49
TOTALS	4183.46	418.34	3230.45	176.93
Total of 50 yr payments from 1975 to 2025				8,845.0

TABLE VIII-17

REPRESENTATIVE PLAN TWO-CAPITAL COST, YEARLY EXPENDITURES, PRESENT WORTH AND AVERAGE ANNUAL COST IN $1,000,000

INTEREST RATE: 5%

COLUMN	1	2	3	4
System	Capital Cost	Yearly Expenditure 1975 to 1985	P.W. of Yearly Expenditures @ 5% - 1975-1985 Col. 2x7.722	Average Annual Cost 50 Yrs @ 5% Col. 3x0.054777
Wastewater Treatment Plants	1,320.05	132.005	1019.34	55.83
Land Treatment Systems				
St. Clair County	62.81	6.281	48.50	2.65
Lenawee County	24.52	2.452	18.93	1.03
Wastewater Interceptors and Transmission Lines	236.44	23.644	182.57	10.00
Stormwater Collection Storage and Transmission	2,561.60	256.16	1978.06	108.35
Landfill Sites				
St. Clair County	6.15	0.615	4.74	0.25
Lenawee County	11.28	1.128	8.71	0.47
TOTALS	4,222.8	422.285	3,260.85	178.58
Total of 50 yr payments from 1975 to 2025				8,929.0

TABLE VIII-18

REPRESENTATIVE PLAN THREE-CAPITAL COST, YEARLY EXPENDITURES, PRESENT WORTH AND AVERAGE ANNUAL COST IN $1,000,000

INTEREST RATE: 5%

COLUM	1	2	3	4
System	Capital Cost	Yearly Expenditure 1975 to 1985	P.W. of Yearly Expenditures @ 5% - 1975-1985 Col. 2x7.722	Average Annual Cost 50 Yrs @ 5% Col. 3x0.054777
Wastewater Treatment Plants	1,320.05	132.005	1,019.34	55.83
Land Treatment Systems				
St. Clair County	194.5	19.45	150.19	8.22
Lenawee County	63.6	6.36	49.11	2.69
Wastewater Interceptors and Transmission Lines	236.44	23.644	182.57	9.99
Stormwater Collection Storage and Transmission	2,561.60	256.16	1,978.06	108.35
Landfill Sites				
St. Clair County	6.15	0.615	4.74	0.25
Lenawee County	11.28	1.128	8.71	0.47
TOTALS	4,393.62	439.36	3,392.72	185.80
Total of 50 yr payments from 1975 to 2025				9,290.0

REPRESENTATIVE PLAN ONE-CAPITAL COST, YEARLY

EXPENDITURES, PRESENT WORTH AND AVERAGE

ANNUAL COST IN $1,000,000

INTEREST RATE: 5-1/2%

COLUMN	1	2	3	4
System	Capital Cost	Yearly Expenditures 1975 to 1985	P.W. of Yearly Expenditures @ 5-1/2%-1975-1985 Col. 2x7.538	Average Annual Cost 50 Yrs @ 5-1/2% Col. 3x0.059061
Wastewater Treatment Plants	1,389.08	138.91	1,047.10	61.84
Wastewater Interceptors and Transmission Lines	214.61	21.46	161.77	9.55
Stormwater Collection Storage and Transmission	2,561.60	256.16	1,930.93	114.04
Landfill Sites				
St. Clair County	6.47	0.647	4.87	0.28
Lenawee County	11.7	1.17	8.81	0.52
TOTALS	4,183.46	418.34	3,153.48	186.23
Total of 50 yr payments from 1975 to 2025				9,311.50

TABLE VIII-20

REPRESENTATIVE PLAN TWO-CAPITAL COST, YEARLY

EXPENDITURES, PRESENT WORTH AND AVERAGE

ANNUAL COST IN $1,000,000

INTEREST RATE: 5-1/2%

COLUMN	1	2	3	4
System	Capital Cost	Yearly Expenditure 1975 to 1985	P.W. of Yearly Expenditures @ 5-1/2%-1975-1985 Col. 2x7.538	Average Annual Cost 50 Yrs @ 5-1/2% Col. 3x0.059061
Wastewater Treatment Plants	1,320.05	132.005	995.05	58.769
Land Treatment Systems				
St. Clair County	62.81	6.281	47.35	2.796
Lenawee County	24.52	2.452	18.48	1.09
Wastewater Interceptors and Transmission Lines	236.44	23.644	178.23	10.526
Stormwater Collection Storage and Transmission	2,561.60	256.16	1930.93	114.04
Landfill Sites				
St. Clair County	6.15	0.615	4.64	0.274
Lenawee County	11.28	1.128	8.50	0.502
TOTALS	4,222.8	422.28	3,183.18	187.997
Total of 50 yr payments from 1975 to 2025				9,399.85

TABLE VIII-21

REPRESENTATIVE PLAN THREE-CAPITAL COST, YEARLY

EXPENDITURES, PRESENT WORTH AND AVERAGE

ANNUAL COST IN $1,000,000

INTEREST RATE: 5-1/2%

COLUMN	1	2	3	4
System	Capital Cost	Yearly Expenditures 1975 to 1985	P.W. of Yearly Expenditures @ 5-1/2%-1975-1985 Col. 2x7.538	Average Annual Cost 50 Yrs @ 5-1/2% Col. 3x0.059061
Wastewater Treatment Plants	1,320.05	132.005	995.05	58.769
Land Treatment Systems				
St. Clair County	194.5	19.45	146.61	8.659
Lenawee County	63.6	6.36	47.94	2.831
Wastewater Interceptors and Transmission Lines	236.44	23.644	178.23	10.526
Stormwater Collection Storage and Transmission	2,561.60	256.16	1,930.93	114.04
Landfill Sites				
St. Clair County	6.15	0.615	4.64	0.274
Lenawee County	11.28	1.128	8.50	0.502
TOTALS	4,393.62	439.36	3311.9	195.601
Total of 50 yr payments from 1975 to 2025				9,780.05

TABLE VIII-22

REPRESENTATIVE PLAN ONE-CAPITAL COST, YEARLY

EXPENDITURES, PRESENT WORTH AND AVERAGE

ANNUAL COST IN $1,000,000

INTEREST RATE: 7%

COLUMN	1	2	3	4
System	Capital Cost	Yearly Expenditure 1975 to 1985	P.W. of Yearly Expenditures @ 7% - 1975-1985 Col. 2x7.024	Average Annual Cost 50 Yrs @ 7% Col. 3x0.072460
Wastewater Treatment Plants	1,389.08	138.91	975.70	70.69
Wastewater Interceptors and Transmission Lines	214.61	21.46	150.73	10.92
Stormwater Collection Storage and Transmission	2,561.60	256.16	1,799.26	130.37
Landfill Sites				
St. Clair County	6.47	0.647	4.54	0.32
Lenawee County	11.7	1.17	8.21	0.59
TOTALS	4,183.46	418.34	2,938.44	212.89
Total of 50 yr payments from 1975 to 2025				10,644.5

TABLE VIII-23

REPRESENTATIVE PLAN TWO-CAPITAL COST, YEARLY

EXPENDITURES, PRESENT WORTH AND AVERAGE

ANNUAL COST IN $1,000,000

INTEREST RATE: 7%

COLUMN	1	2	3	4
System	Capital Cost	Yearly Expenditure 1975 to 1985	P.W. of Yearly Expenditures @ 7% - 1975-1985 Col. 2x7.024	Average Annual Cost 50 Yrs @ 7% Col. 3x0.072460
Wastewater Treatment Plants	1,320.05	132.005	927.20	67.18
Land Treatment Systems				
St. Clair County	62.81	6.281	44.11	3.19
Lenawee County	24.52	2.452	17.22	1.24
Wastewater Interceptors and Transmission Lines	236.44	23.644	166.07	12.03
Stormwater Collection Storage and Transmission	2,561.60	256.16	1,799.26	130.37
Landfill Sites				
St. Clair County	6.15	0.615	4.31	0.31
Lenawee County	11.28	1.128	7.92	0.51
TOTALS	4,222.8	422.285	2966.09	214.89
Total of 50 yr. payments from 1975 to 2025				10,744.50

TABLE VIII-24

REPRESENTATIVE PLAN THREE-CAPITAL COST, YEARLY

EXPENDITURES, PRESENT WORTH AND AVERAGE

ANNUAL COST IN $1,000,000

INTEREST RATE: 7%

COLUMN	1	2	3	4
System	Capital Cost	Yearly Expenditure 1975 to 1985	P.W. of Yearly Expenditures @ 7% - 1975-1985 Col. 2x7.024	Average Annual Cost 50 yrs @ 7% Col. 3x0.07246
Wastewater Treatment Plants	1,320.05	132.005	927.20	67.18
Land Treatment Systems				
St. Clair County	144.5	19.45	136.61	9.89
Lenawee County	63.6	6.36	44.67	3.23
Wastewater Interceptors and Transmission Lines	236.44	23.644	166.07	12.03
Stormwater Collection Storage and Transmission	2,561.60	256.16	1,799.26	130.37
Landfill Sites				
St. Clair County	6.15	0.615	4.31	0.31
Lenawee County	11.28	1.128	7.92	0.57
TOTALS	4,393.62	439.36	3,086.04	223.58
Total of 50 yr. payments - 1975 to 2025				11,179.0

TABLE VIII-25

REPRESENTATIVE PLAN ONE - CAPITAL COST, YEARLY

EXPENDITURES, PRESENT WORTH AND AVERAGE

ANNUAL COST IN $1,000,000

INTEREST RATE : 10%

COLUMN	1	2	3	4
System	Capital Cost	Yearly Expenditure 1975 to 1985	P.W. of Yearly Expenditures @ 10% - 1975-1985 Col. 2x6.145	Average Annual Cost 50 Yrs 10% Col 3xx.100859
Wastewater Treatment Plants	1389.08	138.91	853.60	86.09
Wastewater Interceptors and Transmission Lines	214.61	21.46	131.87	13.30
Stormwater Collection Storage and Transmission	2,561.60	256.16	1,574.10	158.76
Landfill Sites				
St. Clair County	6.47	0.647	3.97	0.40
Lenawee County	11.7	1.17	7.19	0.72
TOTALS	4183.46	418.35	2570.72	259.27
Total of 50 yr payments - 1975 to 2025				12,963.50

TABLE VIII-26

REPRESENTATIVE PLAN TWO CAPITAL COST, YEARLY

EXPENDITURES, PRESENT WORTH AND AVERAGE

ANNUAL COST IN $1,000,000

INTEREST RATE: 10%

COLUMN	1	2	3	4
System	Capital Cost	Yearly Expenditure 1975 to 1985	P.W. of Yearly Expenditures @ 10% 1975-1985 Col. 2x6.145	Average Annual Cost 50 yrs @ 10% Col.3x0.100859
Wastewater Treatment Plants	1,320.05	132.005	811.17	81.81
Land Treatment Systems				
St. Clair County	62.81	6.281	38.59	3.89
Lenawee County	24.52	2.452	15.06	1.51
Wastewater Interceptors and Transmission Lines	236.44	23.644	145.29	14.65
Stromwater Collection Storage and Transmission	2,561.60	256.16	1,574.10	158.76
Landfill Sites				
St. Clair County	6.15	0.615	3.77	0.38
Lenawee County	11.28	1.128	6.93	0.69
TOTALS	4,222.8	422.285	2,594.91	261.69
Total of 50 yr payments - 1975 to 2025				13,084.5

TABLE VIII-27

REPRESENTATIVE PLAN THREE CAPITAL COST, YEARLY

EXPENDITURES, PRESENT WORTH AND AVERAGE

ANNUAL COST IN $1,000,000

INTEREST RATE: 10%

COLUMN	1	2	3	4
System	Capital Cost	Yearly Expenditure 1975 to 1985	P.W. of Yearly Expenditures @ 10% - 1975-1985 Col. 2x6.145	Average Annual Cost 50 yrs @ 10% Col. 3x0.100859
Wastewater Treatment Plants	1,320.05	132.005	811.17	81.81
Land Treatment Systems				
St. Clair County	194.5	19.45	119.52	12.05
Lenawee County	63.6	6.36	39.08	3.94
Wastewater Interceptors and and Transmission Lines	236.44	23.644	145.29	14.65
Stormwater Collection Storage and Transmission	2,561.60	256.16	1,574.10	158.76
Landfill Sites				
St. Clair County	6.15	0.615	3.77	0.38
Lenawee County	11.28	1.128	6.93	0.69
TOTALS	4,393.62	439.36	2,699.86	272.28
Total of 50 yr payments - 1975 to 2025				13,614.0

ADDENDUM

ADDENDUM

Table		Page
A-1	Summary Cost Estimates for Advanced Wastewater Treatment Plants.....	A-1

Tables A-2 Through A-25 Are Detailed Cost Estimates for AWT Plants With Their Corresponding Distinctive Features:

	Location	M&I Capacity (MGD)	Stormwater Capacity (MGD)	Sludge Treatment	
A-2	East China	12	125	I&R	A-2
A-3	East China	12	125	R	A-3
A-4	East China	12	125	---	A-4
A-5	Adrian-Tecumseh	12	10.5	I&R	A-5
A-6	Adrian-Tecumseh	12	10.5	I	A-6
A-7	Adrian-Tecumseh	12	10.5	---	A-7
A-8	Port Huron	24	---	I	A-8
A-9	Port Huron	24	---	---	A-9
A-10	Monroe	40	---	I	A-10
A-11	Monroe	40	---	---	A-11
A-12	Wyandotte	125	---	I&R	A-12
A-13	Wyandotte	125	---	I	A-13
A-14	Wyandotte	125	---	R	A-14
A-15	Wyandotte	125	---	---	A-15
A-16	Huron River	400	1000	I&R	A-16
A-17	Huron River	400	1000	R	A-17
A-18	Huron River	400	1000	---	A-18
A-19	Huron River	525	1000	I&R	A-19
A-20	Huron River	525	1000	R	A-20
A-21	Huron River	525	1000	---	A-21
A-22	Detroit	806	---	I&R	A-22
A-23	Detroit	806	---	I	A-23
A-24	Detroit	806	---	R	A-24
A-25	Detroit	806	---	---	A-25

B-1	Summary Cost Estimates for Independent Physical-Chemical Treatment Plants.....	B-1

Tables B-2 Through B-28 Are Detailed Cost Estimates for IPCT Plants With Their Corresponding Distinctive Features:

Table	Location	M&I Capacity (MGD)	Stormwater Capacity (MGD)	Sludge Treatment	Page
B-2	Algonac	4	---	---	B-2
B-3	East China	8	125	---	B-3
B-4	East China	8	125	R	B-4
B-5	East China	12	125	---	B-5
B-6	East China	12	125	R	B-6
B-7	East China	36	125	---	B-7
B-8	East China	36	125	R	B-8
B-9	Port Huron	24	---	---	B-9
B-10	Port Huron	24	---	R	B-10
B-11	Monroe	40	---	---	B-11
B-12	Monroe	40	---	R	B-12
B-13	Wyandotte	125	---	---	B-13
B-14	Wyandotte	125	---	R	B-14
B-15	Huron River	400	1000	---	B-15
B-16	Huron River	400	1000	R	B-16
B-17	Huron River	525	1000	---	B-17
B-18	Huron River	525	1000	R	B-18
B-19	Huron River	1371	1000	---	B-19
B-20	Huron River	1371	1000	R	B-20
B-21	Detroit	806	---	---	B-21
B-22	Detroit	806	---	R	B-22
B-23	Adrian-Tecumseh	12	10.5	---	B-23
B-24	Adrian-Tecumseh	12	10.5	R	B-24
B-25	Plymouth or Ypsilanti	---	225	---	B-25
B-26	Plymouth or Ypsilanti	---	225	R	B-26
B-27	Macomb County	---	600	---	B-27
B-28	Macomb County	---	600	R	B-28

Tables C-1 Through C-7 Are Detailed Cost Estimates for Lagoon Treatment and Storage Systems:

	Location	M&I Capacity (MGD)	Daily Stormwater Capacity (MGD)	
C-1	St. Clair-Sanilac Co. #1	1139	2175	C-1
C-2	St. Clair-Sanilac Co. #2	1139	125	C-4
C-3	St. Clair Co. #3	187	125	C-7
C-4	St. Clair Co. #4	12	125	C-10
C-5	Monroe Co. #1	268	-	C-13
C-6	Monroe Co. #2	225	-	C-16
C-7	Lenawee Co.	12	10.5	C-19

Table		Page
	Tables D-1 Through D-6 Are Estimates of Costs for Major Land Irrigation Treatment Areas:	

	Location	M&I Capacity (MGD)	Stormwater Capacity MGD)	
D-1	Huron-Tuscola Co. #1	1139	1351	
D-2	Huron-Tuscola Co. #2	1139	78	D-1
D-3	St. Clair Co. #1	12	78	D-2
D-4	Lenawee Co. #1	12	6.6	D-3
D-5	St. Clair Co. #2	187	78	D-4
D-6	Lenawee Co. #2	36	6.6	D-5

Section E Includes the Additional Transmission Line and Lagoon Designs Which Were Necessary for Land Irrigation Treatment Alternative Three:

E-1	Transmission System Annual Costs.....	E-1
E-2	Cost Summary for Screening and Grit Removal.....	E-24
E-3	Cost Summary for Aerated Lagoons.....	E-25
E-4	Cost Summary for Storage Lagoons.....	E-26
E-5	Cost Summary for Seepage Control.....	E-27
E-6	Sludge Disposal (Land Application).....	E-28

Table		Page
	Tables F-1 Through F-13 are Cost Estimates for Sludge Landfill Sites:	

F-1	Advanced Wastewater Treatment Alternative One.....	F-1
F-2	Advanced Wastewater Treatment Alternative Two.....	F-2
F-3	Independent Physical-Chemical Treatment Alternative One.....	F-3
F-4	Independent Physical-Chemical Treatment Alternative Two.....	F-4
F-5	Independent Physical-Chemical Treatment Alternative Three.....	F-5

Table		Page
F-6	Land Irrigation Treatment Alternatives One and Three...	F-6
F-7	Land Irrigation Treatment Alternative Two.....	F-7
F-8	Combination Wastewater Treatment Alternative One.....	F-8
F-9	Combination Wastewater Treatment Alternative Two.....	F-9
F-10	Combination Wastewater Treatment Alternative Three.....	F-10
F-11	Combination Wastewater Treatment Alternative Four.....	F-11
F-12	Representative Plan One.....	F-12
F-13	Representative Plans Two and Three.....	F-13

TABLE A-1
COST ESTIMATES
FOR
ADVANCED WASTEWATER TREATMENT PLANTS

	M & I WASETWATER TREATMENT RATE (MGD)	PEAK STORMWATER TREATMENT RATE (MGD)	CONSTRUCTION COST MILLION DOLLARS	AMORTIZED CONSTRUCTION COST MILLION DOLLARS	AMORTIZED REPLACEMENT COST MILLION DOLLARS	ANNUAL OPERATION AND MAINTENANCE MILLION DOLLARS	TOTAL ANNUAL TREATMENT COST MILLION DOLLARS
East China; I[1] & R[2]	12	125	62.52	3.696	.110	3.392	7.198
East China; R	12	125	61.45	3.633	.097	3.323	7.053
East China	12	125	59.93	3.543	.079	2.913	6.535
Adrian-Tecumseh; I & R	12	10.5	22.26	1.317	.070	1.436	2.911
Adrian-Tecumseh; I	12	10.5	21.00	1.243	.055	1.436	2.734
Adrian-Tecumseh	12	10.5	19.85	1.175	.041	1.385	2.601
Port Huron; I	24	--	16.87	.996	.064	1.875	2.935
Port Huron	24	--	16.87	.996	.049	1.808	2.853
Monroe; I	40	--	31.63	1.869	.077	2.880	4.826
Monroe	40	--	30.72	1.826	.058	2.749	4.631
Wyandotte; I & R	125	--	68.1	4.024	.186	8.156	12.366
Wyandotte; I	125	--	66.4	3.924	.166	7.338	11.428
Wyandotte; R	125	--	68.1	4.024	.186	7.904	12.114
Wyandotte	125	--	66.4	3.924	.127	7.086	11.137
Huron River; I & R	400	1000	536.6	31.691	.739	35.793	68.223
Huron River; R	400	1000	528.8	31.230	.646	34.582	66.458
Huron River	400	1000	521.2	30.782	.552	30.397	61.731
Huron River; I & R	525	1000	607.7	35.891	.849	42.279	79.019
Huron River; R	525	1000	597.7	35.301	.731	40.724	76.756
Huron River	525	1000	589.5	34.816	.632	35.794	71.242
Detroit; I & R	806	--	385.3	22.758	.780	42.632	66.170
Detroit; I	806	--	380.9	22.497	.727	38.282	61.506
Detroit; R	806	--	381.2	22.515	.610	40.278	63.403
Detroit	806	--	376.7	22.239	.557	35.928	58.724

L
[1]: Sewage sludge incinerated prior to landfill disposal
[2]: Lime clarification sludge recalcined and lime reused; waste ash to landfill

TABLE A-2

COST ESTIMATE
FOR
EAST CHINA WASTEWATER TREATMENT PLANT

	Construction Cost Million Dollars	Amortized Construction Cost Thousand Dollars	Amortized Replacement Cost Thousand Dollars	Annual Operation and Maintenance Thousand Dollars	Total Annual Treatment Cost Thousand Dollars
12 MGD M&I ADVANCED WASTEWATER TREATMENT					
Raw Waste Pumping	0.81	48	--	18	66
Preliminary Treatment	0.18	11	--	25	36
Primary Clarifiers	0.39	23	--	21	44
Intermediate Pumping	--	--	--	--	--
Aeration Tanks	0.57	34	--	--	34
Diffused Air Sysrem	0.51	30	8	91	129
Secondary Clarifiers	0.59	35	--	25	60
Nitification Tanks	0.63	37	--	--	37
Diffused Air System	0.64	38	10	114	162
Clarifiers	0.59	35	--	25	60
Two-Stage Lime Clarification	1.20	71	--	198	269
Multi-Media Filtration Denitrification	1.80	106	--	206	312
Granular Carbon Adsorption	2.05	121	3	190	314
Chlorine Contact Tanks	--	--	--	--	--
Chlorination Feed System	0.37	22	--	20	42
Sludge Holding	0.10	6	--	9	15
Sludge Thickening	0.08	5	1	4	10
Thermal Conditioning	0.69	41	11	37	89
125 MGD STORMWATER TREATMENT					
Two Stage Lime Clarification	6.3	372	--	576	948
Multi-Media Filtration	4.5	266	--	267	533
Carbon Adsorption	18.0	1,063	28	438	1,529
Chlorine Contact Tanks	0.2	14	--	--	14
Chlorination Feed System	0.5	30	--	191	221
Sludge Holding	0.2	12	--	17	29
Dewatering	1.01	60	15	108	183
Recalcination	1.35	80	21	410	511
Incineration	.82	48	13	69	130
Instrumentation	.53	31	--	27	58
Land Required (87 acres)	.14	8	--	--	8
Site Work and Piping	2.01	119	--	131	250
Garage and Shop	.26	15	--	--	15
Administration and Laboratory Facilities	.87	51	--	175	226
Outfall	.20	12	--	--	12
Total Construction Cost	48.09	2,844	110	3,392	6,346
Engineering, Legal, Administration and Contingenceis	14.43	852	--	--	852
Total Project Cost	62.52	3,696	110	3,392	7,198

TABLE A-3

COST ESTIMATE
FOR
EAST CHINA WASTEATER TREATMENT PLANT

	Construction Cost Million Dollars	Amortized Construction Cost Thousand Dollars	Amortized Replacement Cost Thousand Dollars	Annual Operation and Maintenance Thousand Dollars	Total Annual Treatment Cost Thousand Dollars
12 MGD M&I ADVANCED WASTEWATER TREATMENT			--	18	117
Raw Waste Pumping	0.81	48	--	18	66
Preliminary Treatment	0.81	11	--	25	36
Primary Clarifiers	0.39	23	--	21	44
Intermediate Pumping	--	--	--	--	--
Aeration Tanks	0.57	34	--	--	34
Diffused Air System	0.51	30	8	91	129
Secondary Clarifiers	0.59	35	--	25	60
Nitification Tanks	0.63	37	--	--	37
Diffused Air System	0.64	38	10	114	162
Clarifiers	0.59	35	--	25	60
Two-Stage Lime Clarification	1.20	71	--	198	269
Multi-Media Filtration Denitrification	1.80	106	--	206	312
Granular Carbon Adsorption	2.05	121	3	190	314
Chlorine Contact Tanks	--	--	--	--	--
Chlorination Feed System	0.37	22	--	20	42
Sludge Holding	0.10	6	--	9	15
Sludge Thickening	0.08	5	1	4	10
Thermal Conditioning	0.69	41	11	37	89
125 MGD STROMWATER TREATMENT					
Two-Stage Lime Clarification	6.3	372	--	576	948
Multi-Media Filtration	4.5	266	--	267	533
Carbon Adsorption	18.0	1,063	28	438	1,529
Chlorine Contact Tanks	0.2	14	--	--	14
Chlorination Feed System	0.5	30	--	191	221
Sludge Holding	0.2	12	--	17	29
Dewatering	1.01	60	15	108	183
Recalcination	1.35	80	21	410	511
Instrumentation	.53	31	--	27	58
Land Required (87 acres)	.14	8	--	--	8
Site Work and Piping	2.01	119	--	131	250
Garage and Shop	.26	15	--	--	15
Administration and Laboratory Facilities	.87	51	--	175	226
Outfall	.20	12	--	--	12
Total Construction Cost	47.27	2,796	97	3,323	6,216
Engineering, Legal, Administration and Contingencies	14.18	837	--	--	837
Total Project Cost	61.45	3,633	97	3,323	7,053

TABLE A-4

COST ESTIMATE
FOR
EAST CHINA WASTEWATER TREATMENT PLANT

	Construction Cost Million Dollars	Amortized Construction Cost Thousand Dollars	Amortized Replacement Cost Thousand Dollars	Annual Operation and Maintenance Thousand Dollars	Total Annual Treatment Cost Thousand Dollars
12 MGD M&I ADVANCED WASTEWATER TREATMENT					
Raw Waste Pumping	0.81	48	--	18	66
Preliminary Treatment	0.18	11	--	25	36
Primary Clarifiers	0.39	23	--	21	44
Intermediate Pumping	--	--	--	--	--
Aeration Tanks	0.57	34	--	--	34
Diffused Air System	0.51	30	8	91	129
Secondary Clarifiers	0.59	35	--	25	60
Nitification Tanks	0.63	37	--	--	37
Diffused Air System	0.64	38	10	114	162
Clarifiers	0.59	35	--	25	60
Two-Stage Lime Clarification	1.20	71	--	198	269
Multi-Media Filtration Denitrification	1.80	106	--	206	312
Granular Carbon Adsorption	2.05	121	3	190	314
Chlorine Contact Tanks	--	--	--	--	--
Chlorination Feed System	0.37	22	--	20	42
Sludge Holding	0.10	6	--	9	15
Sludge Thickening	0.08	5	1	4	10
Thermal Conditioning	0.69	41	11	37	89
Dewatering	0.39	23	6	64	93
125 MGD STORMWATER TREATMENT					
Two Stage Lime Clarification	6.3	372	--	576	948
Multi-Media Filtration	4.5	266	--	267	533
Carbon Adsorption	18.0	1,063	28	438	1,529
Chlorine Contact Tanks	0.2	14	--	--	14
Chlorination Feed System	0.5	30	--	191	221
Sludge Holding	0.2	12	--	17	29
Vacuum Filtration	0.8	47	12	44	103
Instrumentation	.53	31	--	27	58
Land Required (60 acres)	.14	8	--	--	8
Site Work and Piping	2.01	119	--	131	250
Garage and Shop	.26	15	--	--	15
Administration and Laboratory Facilities	.87	51	--	175	226
Outfall	.20	12	--	--	12
Total Construction Cost	46.10	2,726	79	2,913	5,718
Engineering, Legal, Administration and Contingencies	13.83	817	--	--	817
Total Project Cost	59.93	3,543	79	2,913	6,535

TABLE A-5

COST ESTIMATE
FOR
12 MGD ADRIAN ADVANCED WASTEWATER TREATMENT PLANT
10.5 MGD STORMWATER TREATMENT

	Construction Cost Million Dollars	Amortized Construction Cost Thousand Dollars	Amortized Replacement Cost Thousand Dollars	Annual Operation and Maintenance Thousand Dollars	Total Annual Treatment Cost Thousand Dollars
Raw Waste Pumping	0.81	48	--	18	66
Preliminary Treatment	0.18	11	--	25	36
Primary Clarifiers	0.39	23	--	21	44
Aeration Tanks	0.57	34	--	--	34
Diffused Air System	0.51	30	8	91	129
Secondary Clarifiers	0.59	35	--	25	60
Nitification Tanks	0.63	37	--	--	37
Diffused Air System	0.64	38	10	114	162
Clarifiers	0.59	35	--	25	60
Two-Stage Lime Clarification	1.50	89	--	257	346
Multi-Media Filtration Denitrification	2.25	133	--	257	390
Granular Carbon Adsorption	3.30	195	5	228	428
Chlorine Contact Tanks	.06	4	--	--	4
Chlorination Feed System	.60	35	--	55	90
Sludge Holding	.15	9	--	12	21
Sludge Thickening	0.08	5	1	4	10
Thermal Conditioning	0.69	41	11	37	89
Dewatering	.36	21	6	112	139
Recalcination	.97	57	15	88	160
Incineration	.88	52	15	51	117
Instrumentation	0.23	14	--	12	26
Land Required (27 acres)	0.04	2	--	--	2
Site Work and Piping	0.81	48	--	31	79
Garage and Shop	0.06	4	--	--	4
Administration and Laboratory Facilities	0.17	10	--	61	71
Outfall	0.06	4	--	--	4
Total Construction Cost	17.12	1,014	70	1,436	2,608
Engineering, Legal, Administration, and Contingencies	5.14	303	--	--	303
Total Project Cost	22.26	1,317	70	1,436	2,911

TABLE A-6

COST ESTIMATE
FOR
12 MGD ADRIAN ADVANCED WASTEWATER TREATMENT PLANT
10.5 MGD STORMWATER TREATMENT

	Construction Cost Million Dollars	Amortized Construction Cost Thousand Dollars	Amortized Replacement Cost Thousand Dollars	Annual Operation and Maintenance Thousand Dollars	Total Annual Treatment Cost Thousand Dollars
Raw Waste Pumping	0.81	48	--	18	66
Preliminary Treatment	0.18	11	--	25	36
Primary Clarifiers	0.39	23	--	21	44
Aeration Tanks	0.57	34	--	--	34
Diffused Air System	0.51	30	8	91	129
Secondary Clarifiers	0.59	35	--	25	60
Nitification Tanks	0.63	37	--	--	37
Diffused Air System	0.64	38	10	114	162
Clarifiers	0.59	35	--	25	60
Two-Stage Lime Clarification	1.50	89	--	257	346
Multi-Media Filtration Denitrification	2.25	133	--	257	390
Granular Carbon Adsorption	3.30	195	--	228	428
Chlorine Contact Tanks	.06	4	--	--	4
Chlorination Feed System	.60	35	--	55	90
Sludge Holding	.15	9	--	12	21
Sludge Thickening	.08	5	1	4	10
Thermal Conditioning	.69	41	11	37	89
Dewatering	.36	21	6	112	139
Incineration	.88	52	14	51	117
Instrumentation	0.23	14	--	12	26
Land Required (27 acres)	0.04	2	--	--	2
Site Work and Piping	0.81	48	--	31	79
Garage and Shop	0.06	4	--	--	4
Administration and Laboratory Facilities	0.17	10	--	61	71
Outfall	0.06	4	--	--	4
Total Construction Cost	16.15	957	55	1,436	2,448
Engineering, Legal, Administration, and Contingencies	4.85	286	--	--	286
Total Project Cost	21.00	1,243	55	1,436	2,734

TABLE A-7

COST ESTIMATE
FOR
12 MGD ADRIAN ADVANCED WASTEWATER TREATMENT PLANT
10.5 MGD STORMWATER TREATMENT

	Construction Cost Million Dollars	Amortized Construction Cost Thousand Dollars	Amortized Replacement Cost Thousand Dollars	Annual Operation and Maintenance Thousand Dollars	Total Annual Treatment Cost Thousand Dollars
Raw Waste Pumping	0.81	48	--	18	66
Preliminary Treatment	0.18	11	--	25	36
Primary Clarifiers	0.39	23	--	21	44
Aeration Tanks	0.57	34	--	--	34
Diffused Air System	0.51	30	8	91	129
Secondary Clarifiers	0.59	35	--	25	60
Nitification Tanks	0.63	37	--	--	37
Diffused Air System	0.64	38	10	114	162
Clarifiers	0.59	35	--	25	60
Two-State Lime Clarification	1.50	89	--	257	346
Multi-Media Filtration Denitrification	2.25	133	--	257	390
Granular Carbon Adsorption	3.30	195	3	228	428
Chlorine Contact Tanks	.06	4	--	--	4
Chlorination Feed System	.60	35	--	55	90
Sludge Holding	.15	9	--	12	21
Sludge Thickening	.08	5	1	4	10
Thermal Conditioning	.69	41	11	37	89
Dewatering	.36	21	6	112	139
Instrumentation	0.23	14	--	12	26
Land Required (27 acres)	0.04	2	--	--	2
Site Work and Piping	0.81	48	--	31	79
Garage and Shop	0.06	4	--	--	4
Administration and Laboratory Facilities	0.17	10	--	61	71
Outfall	0.06	4	--	--	4
Total Construction Cost	15.27	905	41	1,385	2,331
Engineering, Legal, Administration, and Contingencies	4.58	270	--	--	270
Total Project Cost	19.85	1,175	41	1.385	2,601

TABLE A-8

COST ESTIMATE
FOR
24 MGD PORT HURON ADVANCED WASTEWATER TREATMENT PLANT

	Construction Cost Million Dollars	Amortized Construction Cost Thousand Dollars	Amortized Replacement Cost Thousand Dollars	Annual Operation and Maintenance Thousand Dollars	Total Annual Treatment Cost Thousand Dollars
Raw Waste Pumping	--	--	--	29	29
Preliminary Treatment	--	--	--	41	41
Primary Clarifiers	--	--	--	30	30
Aeration Tanks	0.26	15	--	--	15
Diffused Air System	0.16	9	9	104	122
Secondary Clarifiers	--	--	--	39	39
Nitrification Tanks	1.10	65	--	--	65
Diffused Air System	0.71	42	11	125	178
Clarifiers	1.02	60	--	39	99
Two-Stage Lime Clarification	1.95	115	--	364	479
Multi-Media Filtration Denitrification	2.42	143	--	359	502
Granular Carbon Adsorption	3.45	204	5	298	507
Chlorine Contact Tanks	--	--	--	--	--
Chlorination Feed System	0.40	24	--	31	55
Sludge Holding	0.07	4	--	24	28
Sludge Thickening	--	--	--	6	6
Thermal Conditioning	--	--	13	49	62
Dewatering	0.22	13	11	119	143
Incineration	--	--	15	67	82
Instrumentation	0.18	11	--	9	20
Land Required (38 acres)	0.19	11	--	--	11
Site Work and Piping	0.71	42	--	54	96
Garage and Shop	0.05	3	--	--	3
Administration and Laboratory Facilities	0.09	5	--	88	93
Outfall	--	--	--	--	--
Total Construction Cost	12.98	766	64	1,875	2,705
Engineering, Legal, Administration, and Contingencies	3.89	230	--	--	230
Total Project Cost	16.87	996	64	1,875	2,935

TABLE A-9

COST ESTIMATE
FOR
24 MGD PORT HURON ADVANCED WASTEWATER TREATMENT PLANT

	Construction Cost Million Dollars	Amortized Construction Cost Thousand Dollars	Amortized Replacement Cost Thousand Dollars	Annual Operation and Maintenance Thousand Dollars	Total Annual Treatment Cost Thousand Dollars
Raw Waste Pumping	--	--	--	29	29
Preliminary Treatment	--	--	--	41	41
Primary Clarifiers	--	--	--	30	30
Aeration Tanks	0.26	15	--	--	15
Diffused Air System	0.16	9	9	104	122
Secondary Clarifiers	--	--	--	39	39
Nitrification Tanks	1.10	65	--	--	65
Diffused Air System	0.71	42	11	125	178
Clarifiers	1.02	60	--	39	99
Two-Stage Lime Clarification	1.95	115	--	364	479
Multi-Media Filtration Denitrification	2.42	143	--	359	502
Granular Carbon Adsorption	3.45	204	5	298	507
Chlroine Contact Tanks	--	--	--	--	--
Chlorination Feed System	0.40	24	--	31	55
Sludge Holding	0.07	4	--	24	28
Sludge Thickening	--	--	--	6	6
Thermal Conditioning	--	--	13	49	62
Dewatering	0.22	13	11	119	143
Instrumentation	0.18	11	--	9	20
Land Required (38 acres)	0.19	11	--	--	11
Site Work and Piping	0.71	42	--	54	96
Garage and Shop	0.05	3	--	--	3
Administration and Laboratory Facilities	0.09	5	--	88	93
Outfall	--	--	--	--	--
Total Construction Cost	12.98	766	49	1,808	2,623
Engineering, Legal, Administration, and Contingencies	3.89	230	--	--	230
Total Project Cost	16.87	996	49	1,808	2,853

TABLE A-10

COST ESTIMATE
FOR
40 MGD MONROE ADVANCED WASTEWATER TREATMENT PLANT

	Construction Cost Million Dollars	Amortized Construction Cost Thousand Dollars	Amortized Replacement Cost Thousand Dollars	Annual Operation and Maintenance Thousand Dollars	Total Annual Treatment Cost Thousand Dollars
Raw Waste Pumping	0.85	50	--	45	95
Preliminary Treatment	0.18	11	--	63	74
Primary Clarifiers	0.41	24	--	40	64
Intermediate Pumping	1.10	65	--	39	104
Aeration Tanks	0.71	42	--	--	42
Diffused Air System	0.52	31	17	194	242
Secondary Clarifiers	0.73	43	--	57	100
Nitrification Tanks	1.67	99	--	--	99
Diffused Air System	1.13	67	18	205	290
Clarifiers	1.58	93	--	57	150
Two-Stage Lime Clarification	2.88	170	--	569	739
Multi-Media Filtration Denitrification	3.50	207	--	548	755
Granular Carbon Adsorption	5.30	313	8	431	752
Chlorine Contact Tanks	0.10	6	--	--	6
Chlorination Feed System	0.57	34	--	43	77
Sludge Holding	--	--	--	24	24
Sludge Thickening	0.09	5	2	11	18
Dewatering	0.52	31	13	204	248
Recalcination	--	--	--	--	--
Incineration	0.70	41	19	131	191
Instrumentation	0.23	14	--	17	31
Land Required (50 acres)	.25	15	--	--	15
Site Work and Piping	1.13	67	--	82	149
Garage and Shop	0.07	4	--	--	4
Administration and Laboratory Facilities	0.11	6	--	120	126
Outfall	--	--	--	--	--
Total Construction Cost	24.33	1,438	77	2,880	4,395
Engineering, Legal, Administration, and Contingencies	7.30	431	--	--	431
Total Project Cost	31.63	1,869	77	2,880	4,826

TABLE A-11

COST ESTIMATE
FOR
40 MGD MONROE ADVANCED WASTEWATER TREATMENT PLANT

	Construction Cost Million Dollars	Amortized Construction Cost Thousand Dollars	Amortized Replacement Cost Thousand Dollars	Annual Operation and Maintenance Thousand Dollars	Total Annual Treatment Cost Thousand Dollars
Raw Waste Pumping	0.85	50	--	45	95
Preliminary Treatment	0.18	11	--	63	74
Primary Clarifiers	0.41	24	--	40	64
Intermediate Pumping	1.10	65	--	39	104
Aeration Tanks	0.71	42	--	--	42
Diffused Air System	0.52	31	17	194	242
Secondary Clarifiers	0.73	43	--	57	100
Nitrification Tanks	1.67	99	--	--	99
Diffused Air System	1.13	67	18	205	290
Clarifiers	1.58	93	--	57	150
Two-Stage Lime Clarification	2.88	170	--	569	739
Multi-Media Filtration Denitrification	3.50	207	--	548	755
Granular Carbon Adsorption	5.30	313	8	431	752
Chlorine Contact Tanks	0.10	6	--	--	6
Chlorination Feed System	.57	34	--	43	77
Sludge Holding	--	--	--	24	24
Sludge Thickening	0.09	5	2	11	18
Dewatering	0.52	31	13	204	248
Instrumentation	0.23	14	--	17	31
Land Required (50 acres)	.25	15	--	--	15
Site Work and Piping	1.13	67	--	82	149
Garage and Shop	0.07	4	--	--	4
Administration and Laboratory Facilities	0.11	6	--	120	126
Outfall	--	--	--	--	--
Total Construction Cost	23.63	1,407	8	2,749	4,212
Engineering, Legal, Administration, and Contingencies	7.09	419	--	--	419
Total Project Cost	30.72	1,826	58	2,749	4,631

TABLE A-12

COST ESTIMATE
FOR
125MGD WYANDOTTE ADVANCED WASTEWATER TREATMENT PLANT

	Construction Cost Million Dollars	Amortized Construction Cost Thousand Dollars	Amortized Replacement Cost Thousand Dollars	Annual Operation and Maintenance Thousand Dollars	Total Annual Treatment Cost Thousand Dollars
Raw Waste Pumping	--	--	--	135	135
Preliminary Treatment	--	--	--	164	164
Primary Clarifiers	1.4	83	--	79	162
Intermediate Pumping	1.0	59	--	119	178
Aeration Tanks	0.5	30	--	--	30
Diffused Air System	0.7	41	40	526	607
Secondary Clarifiers	2.4	142	--	144	286
Nitrification Tanks	4.6	272	--	--	272
Diffused Air System	2.2	130	34	412	576
Clarifiers	4.4	260	--	144	404
Two-Stage Lime Clarification	8.0	473	--	1,643	2,116
Multi-Media Filtration Denitrification	7.0	413	--	1,483	1,896
Granular Carbon Adsorption	14.0	827	22	1,049	1,898
Chlorine Contact Tanks	0.1	6	--	--	6
Chlorination Feed System	0.9	53	--	98	151
Sludge Holding	0.2	11	--	34	45
Sludge Thickening	--	--	5	43	48
Dewatering	--	--	26	559	585
Recalcination	1.3	77	20	818	915
Incineration	--	--	39	252	291
Instrumentation	0.5	30	--	25	55
Land Required (100 acres)	0.5	30	--	--	30
Site Work and Piping	2.4	142	--	201	343
Garage and Shop	0.1	6	--	--	6
Administration and Laboratory Facilities	0.2	12	--	228	240
Outfall	--	--	--	--	--
Total Construction Cost	52.4	3,097	186	8,156	11,439
Engineering, Legal, Administration and Contingencies	15.7	927	--	--	927
Total Project Cost	68.1	4,024	186	8,156	12,366

TABLE A-13

COST ESTIMATE
FOR
125 MGD WYANDOTTE ADVANCED WASTEWATER TREATMENT PLANT

	Construction Cost Million Dollars	Amortized Construction Cost Thousand Dollars	Amortized Replacement Cost Thousand Dollars	Annual Operation and Maintenance Thousand Dollars	Total Annual Treatment Cost Thousand Dollars
Raw Waste Pumping	--	--	--	135	135
Preliminary Treatment	--	--	--	164	164
Primary Clarifiers	1.4	83	--	79	162
Intermediate Pumping	1.0	59	--	119	178
Aeration Tanks	0.5	30	--	--	30
Diffused Air System	0.7	41	40	526	607
Secondary Clarifiers	2.4	142	--	144	286
Nitrification Tanks	4.6	272	--	--	272
Diffused Air System	2.2	130	34	412	576
Clarifiers	4.4	260	--	144	404
Two-Stage Lime Clarification	8.0	473	--	1,643	2,116
Multi-Media Filtration Denitrification	7.0	413	--	1,483	1,896
Granular Carbon Adsorption	14.0	827	22	1,049	1,898
Chlorine Contact Tanks	0.1	6	--	--	6
Chlorination Feed System	0.9	53	--	98	151
Sludge Holding	0.2	11	--	34	45
Sludge Thickening	--	--	5	43	48
Dewatering	--	--	26	559	585
Incineration	--	--	39	252	291
Instrumentation	0.5	30	--	25	55
Land Required (100 acres)	0.5	30	--	--	30
Site Work and Piping	2.4	142	--	201	343
Garage and Shop	0.1	6	--	--	6
Administration and Laboratory Facilities	0.2	12	--	228	240
Outfall	--	--	--	--	--
Total Construction Cost	51.1	3,020	166	7,338	10,524
Engineering, Legal, Administration and Contingencies	15.3	904	--	--	904
Total Project Cost	66.4	3,924	166	7,338	11,428

TABLE A-14

COST ESTIMATE
FOR
125 MGD WYANDOTTE ADVANCED WASTEWATER TREATMENT PLANT

	Construction Cost Million Dollars	Amortized Construction Cost Thousand Dollars	Amortized Replacement Cost Thousand Dollars	Annual Operation and Maintenance Thousand Dollars	Total Annual Treatment Cost Thousand Dollars
Raw Waste Pumping	--	--	--	135	135
Preliminary Treatment	--	--	--	164	164
Primary Clarifiers	1.4	83	--	79	162
Intermediate Pumping	1.0	59	--	119	178
Aeration Tanks	0.5	30	--	--	30
Diffused Air System	0.7	41	40	526	607
Secondary Clarifiers	2.4	142	--	144	286
Nitrification Tanks	4.6	272	--	--	272
Diffused Air System	2.2	130	34	412	576
Clarifiers	4.4	260	--	144	404
Two-Stage Lime Clarification	8.0	473	--	1,643	2,116
Multi-Media Filtration Denitrification	7.0	413	--	1,483	1,896
Granular Carbon Adsorption	14.0	827	22	1,049	1,898
Chlorine Contact Tanks	0.1	6	--	--	6
Chlorination Feed System	0.9	53	--	98	151
Sludge Holding	0.2	11	--	34	45
Sludge Thickening	--	--	5	43	48
Dewatering	--	--	26	559	585
Recalcination	1.3	77	20	818	915
Instrumentation	0.5	30	--	25	55
Land Required (100 acres)	0.5	30	--	--	30
Site Work and Piping	2.4	142	--	201	343
Garage and Shop	0.1	6	--	--	6
Administration and Laboratory Facilities	0.2	12	--	228	240
Outfall	--	--	--	--	--
Total Construction Cost	52.4	3,097	186	7,904	11,187
Engineering, Legal, Administration and Contingencies	15.7	927	--	--	927
Total Project Cost	68.1	4,024	186	7,904	12,114

TABLE A-15

COST ESTIMATE
FOR
125 MGD WYANDOTTE ADVANCED WASTEWATER TREATMENT PLANT

	Construction Cost Million Dollars	Amortized Construction Cost Thousand Dollars	Amortized Replacement Cost Thousand Dollars	Annual Operation and Maintenance Thousand Dollars	Total Annual Treatment Cost Thousand Dollars
Raw Waste Pumping	--	--	--	135	135
Preliminary Treatment	--	--	--	164	164
Primary Clarifiers	1.4	83	--	79	162
Intermediate Pumping	1.0	59	--	119	178
Aeration Tanks	0.5	30	--	--	30
Diffused Air System	0.7	41	40	526	607
Secondary Clarifiers	2.4	142	--	144	286
Nitrification Tanks	4.6	272	--	--	272
Diffused Air System	2.2	130	34	412	576
Clarifiers	4.4	260	--	144	404
Two-Stage Lime Clarification	8.0	473	--	1,643	2,116
Multi-Media Filtration Denitrification	7.0	413	--	1,483	1,896
Granular Carbon Adsorption	14.0	827	22	1,049	1,898
Chlorine Contact Tanks	0.1	6	--	--	6
Chlorination Feed System	0.9	53	--	98	151
Sludge Holding	0.2	11	--	34	45
Sludge Thickening	--	--	5	43	48
Dewatering	--	--	26	559	585
Instrumentation	0.5	30	--	25	55
Land Required (100 acres)	0.5	30	--	--	30
Site Work and Piping	2.4	142	--	201	343
Garage and Shop	0.1	6	--	--	6
Administration and Laboratory Facilities	0.2	12	--	228	240
Outfall	--	--	--	--	--
Total Construction Cost	51.1	3,020	127	7,086	10,233
Engineering, Legal, Administration and Contingencies	15.3	904	--	--	904
Total Project Cost	66.4	3,924	127	7,086	11,137

TABLE A-16

COST ESTIMATE
FOR
HURON RIVER WASTEWATER TREATMENT PLANT

	Construction Cost Million Dollars	Amortized Construction Cost Thousand Dollars	Amortized Replacement Cost Thousand Dollars	Annual Operation and Maintenance Thousand Dollars	Total Annual Treatment Cost Thousand Dollars
400 MGD M&I ADVANCED WASTEWATER TREATMENT					
Raw Waste Pumping	8.8	520	--	409	929
Preliminary Treatment	1.4	83	--	445	528
Primary Clarifiers	8.6	508	--	177	685
Intermediate Pumping	--	--	--	--	--
Aeration Tanks	11.5	679	--	--	679
Diffused Air System	5.3	313	82	1,113	1,508
Secondary Clarifiers	12.8	756	--	390	1,146
Nitrification Tanks	13.7	809	--	--	809
Diffused Air System	5.3	313	82	1,124	1,519
Clarifiers	12.8	756	--	390	1,146
Two-Stage Lime Clarification	22.5	1,329	--	4,920	6,249
Multi-Media Filtration Denitrification	20.5	1,211	--	4,278	5,489
Granular Carbon Adsorption	39.0	2,303	60	2,803	5,166
Chlorine Contact Tanks	0.9	53	--	--	53
Chlorination Feed System	2.0	118	--	246	364
Sludge Holding	0.8	47	--	55	102
Sludge Thickening	0.6	35	9	21	65
1,000 MGD STORMWATER TREATMENT					
Two Stage Lime Clarification	42.0	2,481	--	3,959	6,440
Multi-Media Filtration	33.0	1,949	--	1,071	3,020
Carbon Adsorption	122.0	7,205	189	2,387	9,781
Chlorine Contact Tanks	1.4	83	--	--	83
Chlorination Feed System	3.6	213	--	2,783	2,996
Sludge Holding	0.7	41	--	53	94
Vacuum Filtration	8.4	496	130	1,771	2,397
Recalcination	5.9	348	94	4,185	4,627
Incineration	6.0	354	93	1,211	1,658
Instrumentation	2.7	159	--	135	294
Land Required (425 acres)	.6	35	--	--	35
Site Work and Piping	12.4	732	--	1,059	1,791
Garage and Shop	1.5	89	--	--	89
Administration and Laboratory Facilities	3.6	213	--	808	1,021
Outfall	2.5	148	--	--	148
Total Construction Cost	412.8	24,379	739	35,793	60,911
Engineering, Legal, Administration and Contingencies	123.8	7,312	--	--	7,312
Total Project Cost	536.6	31,691	739	35,793	68,223

TABLE A-17

COST ESTIMATE
FOR
HURON RIVER WASTEWATER TREATMENT PLANT

	Construction Cost Million Dollars	Amortized Construction Cost Thousand Dollars	Amortized Replacement Cost Thousand Dollars	Annual Operation and Maintenance Thousand Dollars	Total Annual Treatment Cost Thousand Dollars
400 MGD M&I ADVANCED WASTEWATER TREATMENT					
Raw Waste Pumping	8.8	520	--	409	929
Preliminary Treatment	1.4	83	--	445	528
Primary Clarifiers	8.6	508	--	177	685
Aeration Tanks	11.5	679	--	--	679
Diffused Air System	5.3	313	82	1,113	1,508
Secondary Clarifiers	12.8	756	--	390	1,146
Nitrification Tanks	13.7	809	--	--	809
Diffused Air System	5.3	313	82	1,124	1,519
Clarifiers	12.8	756	--	390	1,146
Two-Stage Lime Clarification	22.5	1,329	--	4,920	6,249
Multi-Media Filtration Denitrification	20.5	1,211	--	4,278	5,489
Granular Carbon Adsorption	39.0	2,303	60	2,803	5,166
Chlorine Contact Tanks	0.9	53	--	--	53
Chlorination Feed System	2.0	118	--	246	364
Sludge Holding	0.8	47	--	55	102
Sludge Thickening	0.6	35	9	21	65
1,000 MGD STORMWATER TREATMENT					
Two Stage Lime Clarification	42.0	2,481	--	3,959	6,440
Multi-Media Filtration	33.0	1,949	--	1,071	3,020
Carbon Adsorption	122.0	7,205	189	2,387	9,781
Chlorine Contact Tanks	1.4	83	--	--	83
Chlorination Feed System	3.6	213	--	2,783	2,996
Sludge Holding	0.7	41	--	53	94
Vacuum Filtration	8.4	496	130	1,771	2,397
Recalcination	5.9	348	94	4,185	4,627
Instrumentation	2.7	159	--	135	294
Land Required (425 acres)	.6	35	--	--	35
Site Work and Piping	12.4	732	--	1,059	1,791
Garage and Shop	1.5	89	--	--	89
Administration and Laboratory Facilities	3.6	213	--	808	1,021
Outfall	2.5	148	--	--	148
Total Construction Cost	406.8	24,025	646	34,582	59,253
Engineering, Legal, Administration and Contingencies	122.0	7,205	--	--	7,205
Total Project Cost	528.8	31,230	646	34,582	66,458

TABLE A-18

COST ESTIMATE
FOR
HURON RIVER WASTEWATER TREATMENT PLANT

	Construction Cost Million Dollars	Amortized Construction Cost Thousand Dollars	Amortized Replacement Cost Thousand Dollars	Annual Operation and Maintenance Thousand Dollars	Total Annual Treatment Cost Thousand Dollars
400 MGD M&I ADVANCED WASTEWATER TREATMENT					
Raw Waste Pumping	8.8	520	--	409	929
Preliminary Treatment	1.4	83	--	445	528
Primary Clarifiers	8.6	508	--	177	685
Aeration Tanks	11.5	679	--	--	679
Diffused Air System	5.3	313	82	1,113	1,508
Secondary Clarifiers	12.8	756	--	390	1,146
Nitrification Tanks	13.7	809	--	--	809
Diffused Air System	5.3	313	82	1,124	1,519
Clarifiers	12.8	756	--	390	1,146
Two-Stage Lime Clarification	22.5	1,329	--	4,920	6,249
Multi-Media Filtration Denitrification	20.5	1,211	--	4,278	5,489
Granular Carbon Adsorption	39.0	2,303	60	2,803	5,166
Chlorine Contact Tanks	0.9	53	--	--	53
Chlorination Feed System	2.0	118	--	246	364
Sludge Holding	0.8	47	--	55	102
Sludge Thickening	0.6	35	9	21	65
1,000 MGD STORMWATER TREATMENT					
Two Stage Lime Clarification	42.0	2,481	--	3,959	6,440
Multi-Media Filtration	33.0	1,949	--	1,071	3,020
Carbon Adsorption	122.0	7,205	189	2,387	9,781
Chlorine Contact Tanks	1.4	83	--	--	83
Chlorination Feed System	3.6	213	--	2,783	2,996
Sludge Holding	0.7	41	--	53	94
Vacuum Filtration	8.4	496	130	1,771	2,397
Instrumentation	2.7	159	--	135	294
Land Required (425 acres)	.6	35	--	--	35
Site Work and Piping	12.4	732	--	1,059	1,791
Garage and Shop	1.5	89	--	--	89
Administration and Laboratory Facilities	3.6	213	--	808	1,021
Outfall	2.5	148	--	--	148
Total Construction Cost	400.9	23,677	552	30,397	54,626
Engineering, Legal, Administration and Contingencies	120.3	7,105	--	--	7,105
Total Project Cost	521.2	30,782	552	30,397	61,731

TABLE A-19

COST ESTIMATE
FOR
HURON RIVER WASTEWATER TREATMENT PLANT

	Construction Cost Million Dollars	Amortized Construction Cost Thousand Dollars	Amortized Replacement Cost Thousand Dollars	Annual Operation and Maintenance Thousand Dollars	Total Annual Treatment Cost Thousand Dollars
525 MGD M&I ADVANCED WASTEWATER TREATMENT					
Raw Waste Pumping	10.8	638	--	527	1,165
Preliminary Treatment	1.7	100	--	565	665
Primary Clarifiers	11.1	656	--	218	874
Aeration Tanks	15.0	886	--	--	886
Diffused Air System	6.6	390	102	1,441	1,933
Secondary Clarifiers	16.7	986	--	498	1,484
Nitrification Tanks	17.6	1,039	--	--	1,039
Diffused Air System	6.6	390	102	1,438	1,930
Clarifiers	16.7	986	--	498	1,484
Two-Stage Lime Clarification	29.0	1,713	--	6,381	8,094
Multi-Media Filtration Denitrification	27.0	1,595	--	5,519	7,114
Granular Carbon Adsorption	51.0	3,012	79	3,603	6,694
Chlorine Contact Tanks	1.1	65	--	--	65
Chlorination Feed System	2.5	148	--	308	456
Sludge Holding	0.9	53	--	68	121
Sludge Thickening	0.8	47	12	28	87
1,000 MGD STORMWATER TREATMENT					
Two Stage Lime Clarification	42.0	2,481	--	3,959	6,440
Multi-Media Filtration	33.0	1,949	--	1,071	3,020
Carbon Adsorption	122.0	7,205	189	2,387	9,781
Chlorine Contact Tanks	1.4	83	--	--	83
Chlorination Feed System	3.6	213	--	2,783	2,996
Sludge Holding	0.7	41	--	53	94
Vacuum Filtration	9.6	567	148	2,227	2,942
Recalcination	6.4	378	99	4,930	5,407
Incineration	7.6	449	118	1,555	2,122
Instrumentation	3.1	183	--	155	338
Land Required (465 acres)	0.6	35	--	--	35
Site Work and Piping	14.2	839	--	1,180	2,019
Garage and Shop	1.6	95	--	--	95
Administration and Laboratory Facilities	3.9	230	--	887	1,117
Outfall	2.7	159	--	--	159
Total Construction Cost	467.5	27,611	849	42,279	70,739
Engineering, Legal, Administration and Contingencies	140.2	8,280	--	--	8,280
Total Project Cost	607.7	35,891	849	42,279	79,019

TABLE A-20

COST ESTIMATE
FOR
HURON RIVER WASTEWATER TREATMENT PLANT

	Construction Cost Million Dollars	Amortized Construction Cost Thousand Dollars	Amortized Replacement Cost Thousand Dollars	Annual Operation and Maintenance Thousand Dollars	Total Annual Treatment Cost Thousand Dollars
525 MGD M&I ADVANCED WASTEWATER TREATMENT					
Raw Waste Pumping	10.8	638	--	527	1,165
Preliminary Treatment	1.7	100	--	565	665
Primary Clarifiers	11.1	656	--	218	874
Aeration Tanks	15.0	886	--	--	886
Diffused Air System	6.6	390	102	1,441	1,933
Secondary Clarifiers	16.7	986	--	498	1,484
Nitrification Tanks	17.6	1,039	--	--	1,039
Diffused Air System	6.6	390	102	1,438	1,930
Clarifiers	16.7	986	--	498	1,484
Two-Stage Lime Clarification	29.0	1,713	--	6,381	8,094
Multi-Media Filtration Denitrification	27.0	1,595	--	5,519	7,114
Granular Carbon Adsorption	51.0	3,012	79	3,603	6,694
Chlorine Contact Tanks	1.1	65	--	--	65
Chlorination Feed System	2.5	148	--	308	456
Sludge Holding	0.9	53	--	68	121
Sludge Thickening	0.8	47	12	28	87
1,000 MGD STORMWATER TREATMENT					
Two Stage Lime Clarification	42.0	2,481	--	3,959	6,440
Multi-Media Filtration	33.0	1,949	--	1,071	3,020
Carbon Adsorption	122.0	7,205	189	2,387	9,781
Chlorine Contact Tanks	1.4	83	--	--	83
Chlorination Feed System	3.6	213	--	2,783	2,996
Sludge Holding	0.7	41	--	53	94
Vacuum Filtration	9.6	567	148	2,227	2,942
Recalcination	6.4	378	99	4,930	5,407
Instrumentation	3.1	183	--	155	338
Land Required (465 acres)	0.6	35	--	--	35
Site Work and Piping	14.2	839	--	1,180	2,019
Garage and Shop	1.6	95	--	--	95
Administration and Laboratory Facilities	3.9	230	--	887	1,117
Outfall	2.7	159	--	--	159
Total Construction Cost	459.9	27,162	731	40,724	68,617
Engineering, Legal, Administration and Contingencies	137.8	8,139	--	--	8,139
Total Project Cost	597.7	35,301	731	40,724	76,756

TABLE A-21

COST ESTIMATE
FOR
HURON RIVER WASTEWATER TREATMENT PLANT

	Construction Cost Million Dollars	Amortized Construction Cost Thousand Dollars	Amortized Replacement Cost Thousand Dollars	Annual Operation and Maintenance Thousand Dollars	Total Annual Treatment Cost Thousand Dollars
525 MGD M&I ADVANCED WASTEWATER TREATMENT					
Raw Waste Pumping	10.8	638	--	527	1,165
Preliminary Treatment	1.7	100	--	565	665
Primary Clarifiers	11.1	656	--	218	874
Aeration Tanks	15.0	886	--	--	886
Diffused Air System	6.6	390	102	1,441	1,933
Secondary Clarifiers	16.7	986	--	498	1,484
Nitrification Tanks	17.6	1,039	--	--	1,039
Diffused Air System	6.6	390	102	1,438	1,930
Clarifiers	16.7	986	--	498	1,484
Two-Stage Lime Clarification	29.0	1,713	--	6,381	8,094
Multi-Media Filtration Denitrification	27.0	1,595	--	5,519	7,114
Granular Carbon Adsorption	51.0	3,012	79	3,603	6,694
Chlorine Contact Tanks	1.1	65	--	--	65
Chlorination Feed System	2.5	148	--	308	456
Sludge Holding	0.9	53	--	68	121
Sludge Thickening	0.8	47	12	28	87
1,000 MGD STORMWATER TREATMENT					
Two-Stage Lime Clarification	42.0	2,481	--	3,959	6,440
Multi-Media Filtration	33.0	1,949	--	1,071	3,020
Carbon Adsorption	122.0	7,205	189	2,387	9,781
Chlorine Contact Tanks	1.4	83	--	--	83
Chlorination Feed System	3.6	213	--	2,783	2,996
Sludge Holding	0.7	41	--	53	94
Vacuum Filtration	9.6	567	148	2,227	2,942
Instrumentation	3.1	183	--	155	338
Land Required (465 acres)	0.6	35	--	--	35
Site Work and Piping	14.2	839	--	1,180	2,019
Garage and Shop	1.6	95	--	--	95
Administration and Laboratory Facilities	3.9	230	--	887	1,117
Outfall	2.7	159	--	--	159
Total Construction Cost	453.5	26,784	632	35,794	63,210
Engineering, Legal, Administration and Contingencies	136.0	8,032	--	--	8,032
Total Project Cost	589.5	34,816	632	35,794	71,242

TABLE A-22

COST ESTIMATE
FOR
806 MGD DETROIT WASTEWATER TREATMENT PLANT

	Construction Cost Million Dollars	Amortized Construction Cost Thousand Dollars	Amortized Replacement Cost Thousand Dollars	Annual Operation and Maintenance Thousand Dollars	Total Annual Treatment Cost Thousand Dollars
Raw Waste Pumping	--	--	--	794	794
Preliminary Treatment	--	--	--	818	818
Primary Clarifiers	9.0	532	--	318	850
Intermediate Pumping	--	--	--	--	--
Aeration Tanks	14.5	856	--	--	856
Diffused Air System	6.4	378	142	2,124	2,644
Secondary Clarifiers	19.0	1,122	--	730	1,852
Nitrification Tanks	27.0	1,595	--	--	1,595
Diffused Air System	9.3	549	144	2,156	2,849
Clarifiers	25.0	1,477	--	730	2,207
Two-Stage Lime Clarification	43.0	2,540	--	9,620	12,160
Multi-Media Filtration Denitrification	42.0	2,481	--	8,178	10,659
Granular Carbon Adsorption	75.0	4,430	116	5,295	9,841
Chlorine Contact Tanks	--	--	--	--	--
Chlorination Feed System	3.5	207	--	450	657
Sludge Holding	0.7	41	--	89	130
Sludge Thickening	0.6	35	17	42	94
Thermal Conditioning	--	--	--	--	--
Dewatering	--	--	138	2,940	3,078
Recalcination	3.4	201	53	4,350	4,604
Incineration	3.2	189	170	2,354	2,713
Instrumentation	2.0	118	--	100	218
Land Required (320 acres)	1.6	85	--	--	85
Site Work and Piping	9.9	585	--	897	1,482
Garage and Shop	0.6	35	--	--	35
Administration and Laboratory Facilities	0.7	41	--	647	688
Outfall	--	--	--	--	--
Total Construction Cost	296.4	17,507	780	42,632	60,919
Engineering, Legal, Administration, and Contingencies	88.9	5,251	--	--	5,251
Total Project Cost	385.3	22,758	780	42,632	66,170

TABLE A-23

COST ESTIMATE
FOR
806 MGD DETROIT ADVANCED WASTEWATER TREATMENT PLANT

	Construction Cost Million Dollars	Amortized Construction Cost Thousand Dollars	Amortized Replacement Cost Thousand Dollars	Annual Operation and Maintenance Thousand Dollars	Total Annual Treatment Cost Thousand Dollars
Raw Waste Pumping	--	--	--	794	794
Preliminary Treatment	--	--	--	818	818
Primary Clarifiers	9.0	532	--	318	850
Intermediate Pumping	--	--	--	--	--
Aeration Tanks	14.5	856	--	--	856
Diffused Air System	6.4	378	142	2,124	2,644
Secondary Clarifiers	19.0	1,122	--	730	1,852
Nitrification Tanks	27.0	1,595	--	--	1,595
Diffused Air System	9.3	549	144	2,156	2,849
Clarifiers	25.0	1,477	--	730	2,207
Two-Stage Lime Clarification	43.0	2,540	--	9,620	12,160
Multi-Media Filtration Denitrification	42.0	2,481	--	8,178	10,659
Granular Carbon Adsorption	75.0	4,430	116	5,295	9,841
Chlorine Contact Tanks	--	--	--	--	--
Chlorination Feed System	3.5	207	--	450	657
Sludge Holding	0.7	41	--	89	130
Sludge Thickening	0.6	35	17	42	94
Thermal Conditioning	--	--	--	--	--
Dewatering	--	--	138	2,940	3,078
Recalcination	--	--	--	--	--
Incineration	32	189	170	2,354	2,713
Instrumentation	2.0	118	--	100	218
Land Required (320 acres)	1.6	85	--	--	85
Site Work and Piping	9.9	585	--	897	1,482
Garage and Shop	0.6	35	--	--	35
Administration and Laboratory Facilities	0.7	41	--	647	688
Outfall	--	--	--	--	--
Total Construction Cost	293.0	17,306	727	38,282	56,315
Engineering, Legal, Administration, and Contingencies	87.9	5,191	--	--	5,191
Total Project Cost	380.9	22,497	727	38,282	61,506

TABLE A-24

COST ESTIMATE
FOR
806 MGD DETROIT ADVANCED WASTEWATER TREATMENT PLANT

	Construction Cost Million Dollars	Amortized Construction Cost Thousand Dollars	Amortized Replacement Cost Thousand Dollars	Annual Operation and Maintenance Thousand Dollars	Total Annual Treatment Cost Thousand Dollars
Raw Waste Pumping	--	--	--	794	794
Preliminary Treatment	--	--	--	818	818
Primary Clarifiers	9.0	532	--	318	850
Aeration Tanks	14.5	856	--	--	856
Diffused Air System	6.4	378	142	2,124	2,644
Secondary Clarifiers	19.0	1,122	--	730	1,852
Nitrification Tanks	27.0	1,595	--	--	1,595
Diffused Air System	9.3	549	144	2,156	2,849
Clarifiers	25.0	1,477	--	730	2,207
Two-Stage Lime Clarification	43.0	2,540	--	9,620	12,160
Multi-Media Filtration Denitrification	42.0	2,481	--	8,178	10,659
Granular Carbon Adsorption	75.0	4,430	116	5,295	9,841
Chlorine Contact Tanks	--	--	--	--	--
Chlorination Feed System	3.5	207	--	450	657
Sludge Holding	0.7	41	--	89	130
Sludge Thickening	0.6	35	17	42	94
Dewatering	--	--	138	2,940	3,078
Recalcination	3.4	201	53	4,350	4,604
Instrumentation	2.0	118	--	100	218
Land Required (320 acres)	1.6	85	--	--	85
Site Work and Piping	9.9	585	--	897	1,482
Garage and Shop	0.6	35	--	--	35
Administration and Laboratory Facilities	0.7	41	--	647	688
Outfall	--	--	--	--	--
Total Construction Cost	293.2	17,318	610	40,278	58,206
Engineering, Legal, Administration, and Contingencies	88.0	5,197	--	--	5,197
Total Project Cost	381.2	22,515	610	40,278	63,403

TABLE A-25

COST ESTIMATE
FOR
806 MGD DETROIT ADVANCED WASTEWATER TREATMENT PLANT

	Construction Cost Million Dollars	Amortized Construction Cost Thousand Dollars	Amortized Replacement Cost Thousand Dollars	Annual Operation and Maintenance Thousand Dollars	Total Annual Treatment Cost Thousand Dollars
Raw Waste Pumping	--	--	--	794	794
Preliminary Treatment	--	--	--	818	818
Primary Clarifiers	9.0	532	--	318	850
Aeration Tanks	14.5	856	--	--	856
Diffused Air System	6.4	378	142	2,124	2,644
Secondary Clarifiers	19.0	1,122	--	730	1,852
Nitrification Tanks	27.0	1,595	--	--	1,595
Diffused Air System	9.3	549	144	2,156	2,849
Clarifiers	25.0	1,477	--	730	2,207
Two-Stage Lime Clarification	43.0	2,540	--	9,620	12,160
Multi-Media Filtration Denitrification	42.0	2,481	--	8,178	10,659
Granular Carbon Adsorption	75.0	4,430	116	5,295	9,841
Chlorine Contact Tanks	--	--	--	--	--
Chlorination Feed System	3.5	207	--	450	657
Sludge Holding	0.7	41	--	89	130
Sludge Thickening	0.6	35	17	42	94
Dewatering	--	--	138	2,940	3,078
Instrumentation	2.0	118	--	100	218
Land Required (320 acres)	1.6	95	--	--	95
Site Work and Piping	9.9	585	--	897	1,482
Garage and Shop	0.6	35	--	--	35
Administration and Laboratory Facilities	0.7	41	--	647	688
Outfall	--	--	--	--	--
Total Construction Cost	289.8	17,107	557	35,928	53,592
Engineering, Legal, Administration, and Contingencies	86.9	5,132	--	--	5,132
Total Project Cost	376.7	22,239	557	35,928	58,724

TABLE B-1

COST ESTIMATES
FOR
INDEPENDENT PHYSICAL-CHEMICAL TREATMENT PLANTS

	M & I WASTEWATER TREATMENT RATE (MGD)	PEAK STORMWATER TREATMENT RATE (MGD)	CONSTRUCTION COST MILLION DOLLARS	AMORTIZED CONSTRUCTION COST MILLION DOLLARS	AMORTIZED REPLACEMENT COST MILLION DOLLARS	ANNUAL OPERATION AND MAINTENANCE MILLION DOLLARS	TOTAL ANNUAL TREATMENT COST MILLION DOLLARS
Algonac	4	--	5.56	.328	.021	.349	.698
East China	8	125	51.36	3.037	.073	2.334	5.444
East China; R*	8	125	56.31	3.329	.203	2.492	6.024
East China	12	125	52.79	3.121	.077	2.834	6.032
East China; R	12	125	57.73	3.412	.207	2.992	6.611
East China	36	125	65.8	3.704	.109	3.955	5.217
East China; R	36	125	72.0	4.070	.274	4.230	3.574
Port Huron	24	--	9.18	.542	.047	1.331	1.920
Port Huron; R	24	--	10.93	.642	.137	1.466	2.245
Monroe	40	--	18.59	1.099	.068	2.131	3.298
Monroe; R	40	--	21.58	1.276	.157	2.315	3.748
Wyandotte	125	--	40.2	2.374	.169	6.192	8.735
Wyandotte; R	125	--	50.8	3.000	.450	6.733	10.183
Huron River	400	1000	454.6	26.849	.811	30.778	58.438
Huron River; R	400	1000	493.3	29.137	1.835	35.059	66.031
Huron River	525	1000	501.9	29.645	.963	38.265	68.873
Huron River; R	525	1000	547.4	32.330	2.165	40.557	75.052
Huron River	1371	1000	893.9	52.792	1.888	82.143	136.823
Huron River; R	1371	1000	972.3	58.014	4.225	88.122	150.361
Detroit	806	--	246.0	14.526	.994	35.436	50.956
Detroit; R	806	--	270.0	15.947	2.196	38.524	56.667
Adrian-Tecumseh	12	10.5	11.3	.671	.036	.839	1.546
Adrian-Tecumseh; R	12	10.5	13.7	.812	.096	.924	1.832
Plymouth or Ypsilanti	--	225	71.5	4.225	.067	2.808	7.100
Plymouth or Ypsilanti; R	--	225	73.8	4.361	.095	3.346	7.802
Macomb County	--	600	181.5	10.725	.197	8.312	19.234
Macomb County; R	--	600	177.7	10.501	.152	7.252	17.905

*Lime clarification sludge to be recalcined and lime reused; waste ash to landfill

TABLE B-2

COST ESTIMATE
FOR
ALGONAC INDEPENDENT PHYSICAL-CHEMICAL TREATMENT PLANT
4 MGD

	Capital Cost $\$x10^6$	Annual Capital Cost $\$x10^3$	Annual Replacement Cost $\$x10^3$	Annual Operation and Maintenance Cost $\$x10^3$	Total Annual Cost $\$x10^3$
Raw Waste Pumping	.33	19	--	10	29
Pretreatment	.10	6	--	10	16
Flow Equalization	.45	27	--	1	28
Two-Stage Lime Clarification	.63	37	--	102	139
Activated Carbon Adsorption	1.60	94	10	50	154
Chlorine Feed System	.25	15	--	93	108
Sludge Thickening	.12	7	--	5	12
Vacuum Filtration	.32	19	11	18	48
Recalcination	--	--	--	--	--
	3.80	244	21	289	534
Land Required (8 Acre)	.04	2	--	--	2
Site Work and Piping	.13	8	--	11	19
Garage and Shop	.01	1	--	--	1
Administration and Lab Facilities	.27	16	--	47	63
Instrumentation	.03	2	--	2	4
Outfall	--	--	--	--	--
Total Construction Cost	4.28	253	21	349	623
Engineering, Administration, Legal and Contingencies	1.28	75	--	--	75
Total Project Cost	5.56	328	21	349	698

TABLE B-3

COST ESTIMATE
FOR
EAST CHINA INDEPENDENT PHYSICAL-CHEMICAL TREATMENT PLANT
8 MGD - MUNICIPAL AND INDUSTRIAL WASTE
125 MGD - PEAK STORM FLOW

	Capital Cost $\$x10^6$	Annual Capital Cost $\$x10^3$	Annual Replacement Cost $\$x10^3$	Annual Operation and Maintenance Cost $\$x10^3$	Total Annual Cost $\$x10^3$
M&I WASTEWATER TREATMENT					
Raw Waste Pumping	.58	34	--	14	48
Pretreatment	.14	8	--	18	26
Flow Equalization	.58	34	--	3	37
Two-Stage Line Clarification	1.05	62	--	183	245
Activated Carbon Adsorption	2.55	151	16	87	254
Chlorine Feed System	.35	21	--	163	184
Sludge Thickening	.18	11	--	9	20
STORMWATER TREATMENT					
Two-Stage Lime Clarification	6.30	372	--	576	948
Multi-Media Filtration	4.50	266	--	267	533
Carbon Adsorption	18.00	1063	28	438	1529
Chlorine Contact Tanks	.23	14	--	--	14
Chlorination Feed System	.50	30	--	191	221
Sludge Holding	.20	12	--	17	29
Vacuum Filtration (1300 SF)	.87	51	29	63	143
Land Required (70 Acre)	.35	21	--	--	21
Site Work and Piping	1.40	83	--	117	200
Garage and Shop	.14	8	--	--	8
Administration and Laboratory Facilities	1.00	59	--	172	231
Instrumentation	.32	19	--	16	35
Outfall	.30	18	--	--	18
Total Construction Cost	39.51	2337	73	2334	4744
Engineering, Legal, Administration and Contingencies	11.85	700	--	--	700
Total Project Cost	51.36	3037	73	2334	5444

TABLE B-4

COST ESTIMATE
FOR
EAST CHINA INDEPENDENT PHYSICAL-CHEMICAL TREATMENT PLANT
8 MGD - MUNICIPAL AND INDUSTRIAL WASTE
125 MGD - PEAK STORM FLOW

	Capital Cost, $x10^6	Annual Capital Cost, $x10^3	Annual Replacement Cost, $x10^3	Annual Operation and Maintenance Cost, $x10^3	Total Annual Cost, $x10^3
M & I WASTEWATER TREATMENT					
Raw Waste Pumping	.58	34	--	14	48
Pretreatment	.14	8	--	18	26
Flow Equalization	.58	34	--	3	37
Two-Stage Lime Clarification	1.05	62	--	183	245
Activated Carbon Adsorption	2.55	151	16	87	254
Chlorine Feed System	.35	21	--	163	184
Sludge Thickening	.18	11	--	9	20
STORMWATER TREATMENT					
Two-Stage Lime Clarification	6.30	372	--	576	948
Multi-Media Filtration	4.50	266	--	267	533
Carbon Adsorption	18.00	1063	28	438	1529
Chlorine Contact Tanks	.20	14	--	--	14
Chlorination Feed System	.50	30	--	191	221
Sludge Holding	.20	12	--	17	29
Vacuum Filtration (1300 SF)	.87	51	29	63	143
Recalcination (225 T/D)	3.80	224	130	158	512
Land Required (70 Acre)	.35	21	--	--	21
Sitework and Piping	1.40	83	--	117	200
Garage and Shop	.14	8	--	--	8
Administration and Laboratory Facilities	1.00	59	--	172	231
Instrumentation	.32	19	--	16	35
Outfall	.30	18	--	--	18
Total Construction Cost	43.31	2561	203	2492	5256
Engineering, Legal, Administration and contingencies	13.00	768	--	--	768
Total Project Cost	56.31	3329	203	2492	6024

TABLE B-5

COST ESTIMATE
FOR
EAST CHINA INDEPENDENT PHYSICAL-CHEMICAL TREATMENT PLANT
12 MGD - MUNICIPAL AND INDUSTRIAL WASTE
125 MGD - PEAK STORM FLOW

	Capital Cost $\$x10^6$	Annual Capital Cost $\$x10^3$	Annual Replacement Cost $\$x10^3$	Annual Operation and Maintenance Cost $\$x10^3$	Total Annual Cost $\$x10^3$
M&I WASTEWATER TREATMENT					
Raw Waste Pumping	.68	40	--	18	58
Pretreatment	.16	9	--	25	34
Flow Equalization	.59	35	--	3	38
Two-Stage Lime Clarification	1.28	76	--	264	340
Activated Carbon Adsorption	3.07	181	20	122	323
Chlorine Feed System	.44	26	--	385	411
Sludge Thickening	.23	14	--	13	27
STORMWATER TREATMENT					
Two-Stage Lime Clarification	6.30	372	--	576	948
Multi-Media Filtration	4.50	266	--	267	533
Activated Carbon Adsorption	18.00	1063	28	438	1529
Chlorine Contact Tanks	.20	14	--	--	14
Chlorine Feed System	.50	30	--	191	221
Sludge Holding	.20	12	--	17	29
Vacuum Filtration (1360 SF)	.89	53	29	209	291
Land Required (75 Acre)	.38	22	--	--	22
Site Work and Piping	1.42	84	--	118	202
Garage and Shop	.14	8	--	--	8
Administration and Laboratory Facilities	1.01	59	--	172	231
Instrumentation	.32	19	--	16	35
Outfall	.30	18	--	--	18
Total Construction Cost	40.61	2401	77	2834	5312
Engineering, Legal, Administration and Contingencies	12.18	720	--	--	720
Total Project Cost	52.79	3121	77	2834	6032

TABLE B-6

COST ESTIMATE
FOR
EAST CHINA INDEPENDENT PHYSICAL-CHEMICAL TREATMENT PLANT
12 MGD - MUNICIPAL AND INDUSTRIAL WASTE
125 MGD - PEAK STORM FLOW

	Capital Cost $\$x10^6$	Annual Capital Cost $\$x10^3$	Annual Replacement Cost $\$x10^3$	Annual Operation and Maintenance Cost $\$x10^3$	Total Annual Cost $\$x10^3$
M & I WASTEWATER TREATMENT					
RAW WASTE PUMPING	.68	40	--	18	58
Pretreatment	.16	9	--	25	34
Flow Equalization	.59	35	--	3	38
Two-Stage Lime Clarification	1.28	76	--	264	340
Activated Carbon Adsorption	3.07	181	20	122	323
Chlorine Feed System	.44	26	--	385	411
Sludge Thickening	.23	14	--	13	27
	6.45	381	20	830	1231
STORMWATER TREATMENT					
Two-Stage Lime Clarification	6.30	372	--	576	948
Multi-Media Filtration	4.50	266	--	267	533
Activated Carbon Adsorption	18.00	1063	28	438	1529
Chlorine Contact Tanks	.20	14	--	--	14
Chlorine Feed System	.50	30	--	191	221
Sludge Holding	.20	12	--	17	29
	29.70	1757	28	1489	3274
Vacuum Filtration (1360 SF)	.89	53	29	209	291
Recalcination (225 T/D)	3.80	224	130	158	512
	4.69	277	159	367	803
Land Required (75 Acre)	.38	22	--	--	22
Site Work and Piping	1.42	84	--	118	202
Garage and Shop	.14	8	--	--	8
Administration and Laboratory Facilities	1.01	59	--	172	231
Instrumentation	.32	19	--	16	35
Outfall	.30	18	--	--	18
Total Construction Cost	44.41	2625	207	2992	5824
Engineering, Legal, Administration and Contingencies	13.32	787	--	--	787
Total Project Cost	57.73	3412	207	2992	6611

TABLE B-7

COST ESTIMATE
FOR
EAST CHINA INDEPENDENT PHYSICAL-CHEMICAL TREATMENT PLANT
35 MGD MUNICIPAL AND INDUSTRIAL WASTE
125 MGD PEAK STORM FLOW

	Capital Cost$_6$ $x10$	Annual Capital Cost$_3$ $x10$	Annual Replacement Cost$_3$ $x10$	Annual Operation and Maintenance Cost$_3$ $x10$	Total Annual Cost$_3$ $x10$
M&I WASTEWATER TREATMENT					
Raw Waste Pumping	1.7	100	--	41	141
Pretreatment	.3	18	--	58	76
Flow Equalization	.6	35	--	5	40
Two-Stage Lime Clarification	3.0	117	--	717	834
Activated Carbon Adsorption	7.3	431	47	306	784
Chlorination	.2	12	--	849	861
Sludge Thickening	.5	30	--	33	63
STORMWATER TREATMENT					
Two-Stage Lime Clarification	6.3	372	--	576	948
Multi-Media Filtration	4.5	266	--	267	533
Carbon Adsorption	8.0	1063	28	438	1529
Chlorine Contact Tanks	.2	14	--	--	14
Chlorination Feed System	.5	30	--	191	221
Sludge Holding	.2	12	--	17	29
Vacuum Filtration (1550 Sq. Ft.)	1.0	59	34	92	185
Land Required (80 Acres)	.4	24	--	--	24
Site Work and Piping	1.7	100	--	141	241
Garage and Shop	.2	12	--	--	12
Administration and Laboratory Facilities	1.2	70	--	204	274
Instrumentation	.4	24	--	20	44
Outfall	.3	18	--	--	18
Total Construction Cost	50.6	2807	109	3955	4320
Engineering, Legal, Administration and Contingencies	15.2	897	--	--	897
Total Project Cost	65.8	3704	109	3955	5217

TABLE B-8

COST ESTIMATE
FOR
EAST CHINA INDEPENDENT PHYSICAL-CHEMICAL TREATMENT PLANT
36 MGD MUNICIPAL AND INDUSTRIAL WASTE
125 MGD PEAK STORM FLOW

	Capital Cost $\$x10^6$	Annual Capital Cost $\$x10^3$	Annual Replacement Cost $\$x10^3$	Annual Operation and Maintenance Cost $\$x10^3$	Total Annual Cost $\$x10^3$
M&I WASTEWATER TREATMENT					
Raw Waste Pumping	1.7	100	--	41	141
Pretreatment	.3	18	--	58	76
Flow Equalization	.6	35	--	5	40
Two-Stage Lime Clarification	3.0	117	--	717	834
Activated Carbon Adsorption	7.3	431	47	306	784
Chlorination	.2	12	--	849	861
Sludge Thickening	.5	30	--	33	63
STORMWATER TREATMENT					
Two-Stage Lime Clarification	6.3	372	--	576	948
Multimedia Filtration	4.5	266	--	267	533
Carbon Adsorption	8.0	1063	28	438	1529
Chlorine Contact Tanks	.2	14	--	--	14
Chlorination Feed System	.5	30	--	191	221
Sludge Holding	.2	12	--	17	29
Vacuum Filtration (1550 Sq. Ft.)	1.0	59	34	92	185
Recalcination (300 T/D)	4.8	283	165	275	723
Land Required (80 Acres)	.4	24	--	--	24
Site Work and Piping	1.7	100	--	141	241
Garage and Shop	.2	12	--	--	12
Administration and Laboratory Facilities	1.2	70	--	204	274
Instrumentation	.4	24	--	20	44
Outfall	.3	18	--	--	18
Total Construction Cost	55.4	3090	274	4230	7594
Engineering, Legal, Administration and Contingencies	16.6	980	--	--	980
Total Project Cost	72.0	4070	274	4230	8574

TABLE B-9

COST ESTIMATE
FOR
PORT HURON INDEPENDENT PHYSICAL-CHEMICAL TREATMENT PLANT
24 MGD - MUNICIPAL AND INDUSTRIAL WASTE

	Capital Cost $\$x10^6$	Annual Capital Cost $\$x10^3$	Annual Replacement Cost $\$x10^3$	Annual Operation and Maintenance Cost $\$x10^3$	Total Annual Cost $\$x10^3$
Raw Waste Pumping	--	--	--	29	29
Pretreatment	--	--	--	42	42
Flow Equalization	--	--	--	5	5
Two-Stage Lime Clarification	.70	41	--	473	514
Activated Carbon Adsorption	5.10	301	32	210	543
Chlorine Feed System	.64	38	--	425	463
Sludge Thickening	--	--	--	21	21
Centrifugation	--	--	15	43	58
Land Required	--	--	--	--	--
Site Work and Piping	.30	18	--	33	51
Garage and Shop	.03	2	--	--	2
Administration and Laboratory Facilities	.21	12	--	45	57
Instrumentaion	.08	5	--	5	10
Outfall	--	--	--	--	--
Total Construction Cost	7.06	--	--	--	--
Engineering, Legal, Administration and Contingencies	2.12	125	--	--	125
Total Project Cost	9.18	542	47	1331	1920

AD-A041 115 SOUTHEASTERN MICHIGAN WASTEWATER MANAGEMENT SURVEY SCOPE STUDY DESIGN AND COST APPENDIX(U) CORPS OF ENGINEERS DETROIT MICH DDTROIT DISTRICT MAY 74 6/6

UNCLASSIFIED F/G 13/2 NL

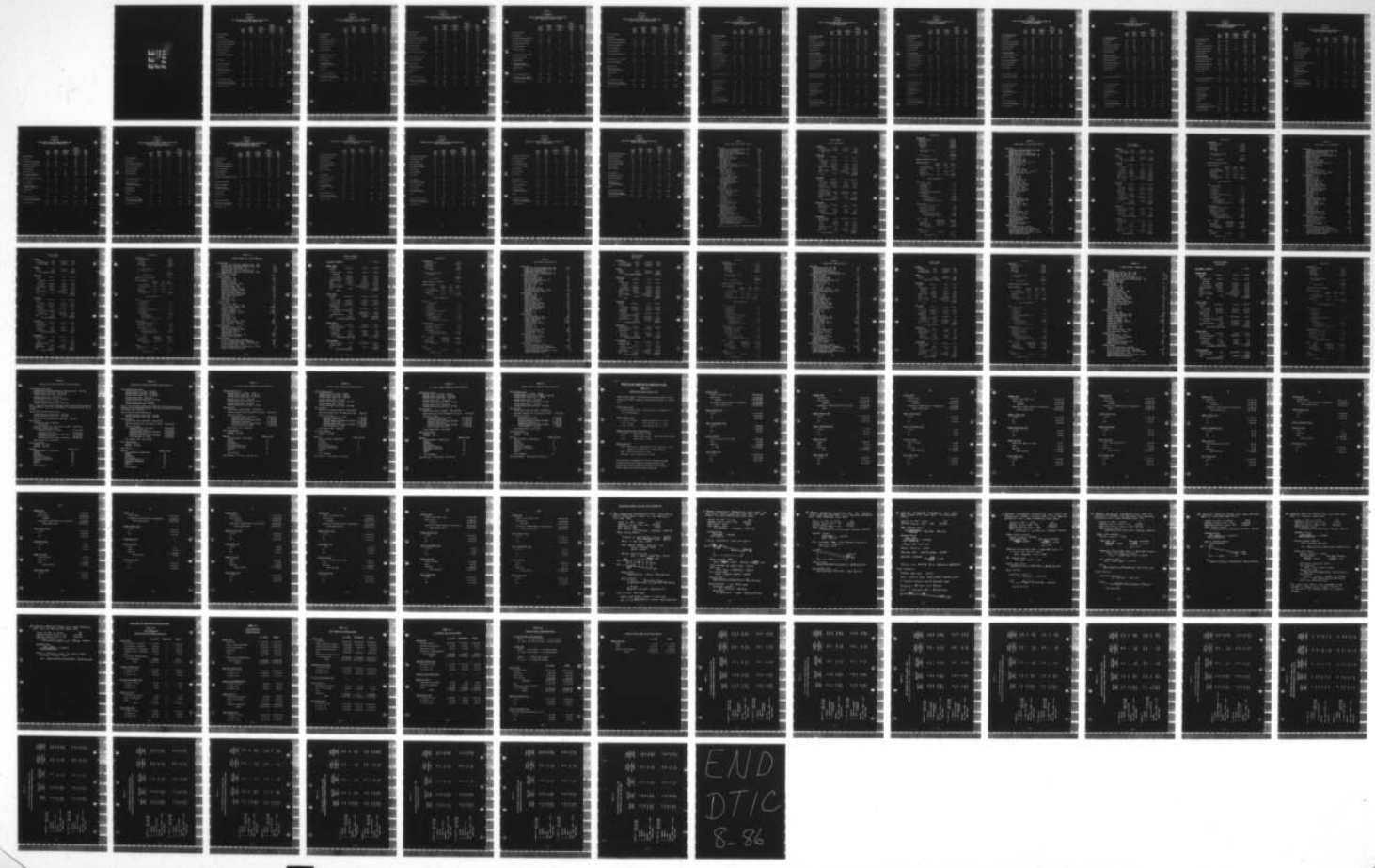

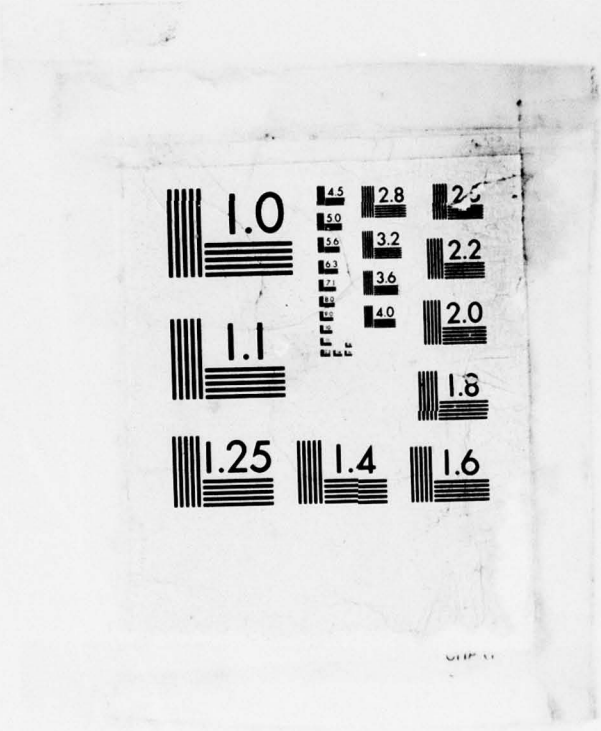
1.0
1.1
1.25
1.4
1.6
1.8
2.0
2.2
2.8
3.2
3.6
4.0
4.5
5.0
5.6
6.3

TABLE B-10

COST ESTIMATE
FOR
PORT HURON INDEPENDENT PHYSICAL-CHEMICAL TREATMENT PLANT
24 MGD - MUNICIPAL AND INDUSTRIAL WASTE

	Capital Cost $\$x10^6$	Annual Capital Cost $\$x10^3$	Annual Replacement Cost $\$x10^3$	Annual Operation and Maintenance Cost $\$x10^3$	Total Annual Cost $\$x10^3$
Raw Waste Pumping	--	--	--	29	29
Pretreatment	--	--	--	42	42
Flow Equalization	--	--	--	5	5
Two-Stage Lime Clarification	.70	41	--	473	514
Activated Carbon Adsorption	5.10	301	32	210	543
Chlorine Feed System	.64	38	--	425	463
Sludge Thickening	--	--	--	21	21
Centrifugation	--	--	15	43	58
Recalcination-Incineration	1.31	77	90	135	302
Land Required	--	--	--	--	--
Site Work and Piping	.30	18	--	33	51
Garage and Shop	.03	2	--	--	2
Administration and Laboratory Facilities	.21	12	--	45	57
Instrumentation	.08	5	--	5	10
Outfall	--	--	--	--	--
Total Construction Cost	8.37	494	137	1466	2097
Engineering, Legal, Administration and Contingencies	2.51	148	--	--	148
Total Project Cost	10.93	642	137	1466	2245

TABLE B-11

COST ESTIMATE
FOR
MONROE INDEPENDENT PHYSICAL-CHEMICAL TREATMENT PLANT
40 MGD - MUNICIPAL AND INDUSTRIAL WASTE

	Capital Cost $\$x10^6$	Annual Capital Cost $\$x10^3$	Annual Replacement Cost $\$x10^3$	Annual Operation and Maintenance Cost $\$x10^3$	Total Annual Cost $\$x10^3$
Raw Waste Pumping	1.10	65	--	33	98
Pretreatment	.25	15	--	47	62
Two-Stage Lime Clarification	2.10	124	--	785	909
Activated Carbon Adsorption	8.00	472	51	340	863
Chlorine Feed System	.86	51	--	680	731
Sludge Thickening	.50	30	--	31	61
Vacuum Filtration	--	--	17	56	73
Land Required (+ 12 Acres)	.06	4	--	--	4
Site Work and Piping	.70	41	--	63	104
Garage and Shop	.07	4	--	--	4
Administration and Laboratory Facilities	.50	30	--	87	117
Instrumentation	.16	10	--	9	19
Outfall	--	--	--	--	--
Total Construction Cost	14.30	846	68	2131	3045
Engineering, Legal, Administration and Contingencies	4.29	253	--	--	253
Total Project Cost	18.59	1099	68	2131	3298

TABLE B-12

COST ESTIMATE
FOR
MONROE INDEPENDENT PHYSICAL-CHEMICAL TREATMENT PLANT
40 MGD - MUNICIPAL AND INDUSTRIAL WASTE

	Capital Cost $\$x10^6$	Annual Capital Cost $\$x10^3$	Annual Replacement Cost $\$x10^3$	Annual Operation and Maintenance Cost $\$x10^3$	Total Annual Cost $\$x10^3$
Raw Waste Pumping	1.10	65	--	33	98
Pretreatment	.25	15	--	47	62
Two-Stage Lime Clarification	2.10	124	--	785	909
Activated Carbon Adsorption	8.00	472	51	340	863
Chlorine Feed System	.86	51	--	680	731
Sludge Thickening	.50	30	--	31	61
Vacuum Filtration	--	--	17	56	73
Recalcination-Incineration	2.30	136	89	184	409
Land Required (+12 Acres)	.06	4	--	--	4
Site Work and Piping	.70	41	--	63	104
Garage and Shop	.07	4	--	--	4
Administration and Laboratory Facilities	.50	30	--	87	117
Instrumentation	.16	10	--	9	19
Outfall	--	--	--	--	--
Total Construction Cost	16.60	982	157	2315	3454
Engineering, Legal, Administration and Contingencies	4.98	294	--	--	294
Total Project Cost	21.58	1276	157	2315	3748

TABLE B-13

COST ESTIMATE
FOR
WYANDOTTE INDEPENDENT PHYSICAL-CHEMICAL TREATMENT PLANT
125 MGD - MUNICIPAL AND INDUSTRIAL WASTE

	Capital Cost $\$x10^6$	Annual Capital Cost $\$x10^3$	Annual Replacement Cost $\$x10^3$	Annual Operation and Maintenance Cost $\$x10^3$	Total Annual Cost $\$x10^3$
Raw Waste Pumping	--	--	--	135	135
Pretreatment	--	--	--	166	166
Two-Stage Lime Clarification	5.4	319	--	2167	2486
Activated Carbon Adsorption	21.0	1240	135	1186	2561
Chlorination Feed System	1.8	106	--	1982	2088
Sludge Thickening	--	--	--	108	108
Vacuum Filtration	--	--	34	153	187
Land Required (32+ 10 Acres)	0.1	6	--	--	6
Site Work and Piping	1.3	77	--	113	190
Garage and Shop	.1	6	--	--	6
Administration and Laboratory Facilities	.9	53	--	167	220
Instrumentation	.3	18	--	15	33
Outfall	--	--	--	--	--
Total Construction Cost	30.9	1825	169	6192	8186
Engineering, Legal, Administration and Contingencies	9.3	549	--	--	549
Total Project Cost	40.2	2374	169	6192	8735

TABLE B-14

COST ESTIMATE
FOR
WYANDOTTE INDEPENDENT PHYSICAL-CHEMICAL TREATMENT PLANT
125 MGD - MUNICIPAL AND INDUSTRIAL WASTE

	Capital Cost $\$x10^6$	Annual Capital Cost $\$x10^3$	Annual Replacement Cost $\$x10^3$	Annual Operation and Maintenance Cost $\$x10^3$	Total Annual Cost $\$x10^3$
Raw Waste Pumping	--	--	--	135	135
Pretreatment	--	--	--	166	166
Two-Stage Lime Clarification	5.4	319	--	2167	2486
Activated Carbon Adsorption	21.0	1240	135	1186	2561
Chlorine Feed System	1.8	106	--	1982	2088
Sludge Thickening	--	--	--	108	108
Vacuum Filtration	--	--	34	153	187
Recalcination-Incineration	8.2	484	281	541	1306
Land Required (32+ 10 Acres)	0.1	6	--	--	6
Site Work and Piping	1.3	77	--	113	190
Garage and Shop	.1	6	--	—	6
Administration and Laboratory Facilities	.9	53	--	167	220
Instrumentation	.3	18	--	15	33
Outfall	--	--	--	--	--
Total Construction Cost	39.1	2309	450	6733	9492
Engineering, Legal, Administration and Contingencies	11.7	691	--	--	691
Total Project Cost	50.8	3000	450	6733	10183

TABLE B-15

COST ESTIMATE
FOR
HURON RIVER INDEPENDENT PHYSICAL-CHEMICAL TREATMENT PLANT
400 MGD - MUNICIPAL AND INDUSTRIAL
1000 MGD - PEAK STORM FLOW

	Capital Cost $\$x10^6$	Annual Capital Cost $\$x10^3$	Annual Replacement Cost $\$x10^3$	Annual Operation and Maintenance Cost $\$x10^3$	Total Annual Cost $\$x10^3$
M&I WASTEWATER TREATMENT					
Raw Waste Pumping	8.8	520	--	409	929
Pretreatment	1.4	83	--	445	528
Two-Stage Lime Clarification	27.4	1618	--	7141	8759
Activated Carbon Adsorption	65.0	3839	418	2878	7135
Chlorine Feed System	3.8	224	--	6014	6238
Sludge Thickening	5.0	295	--	337	632
STORMWATER TREATMENT					
Two-Stage Lime Clarification	42.0	2481	--	3959	6440
Multi-Media Filtration	33.0	1949	--	1071	3020
Activated Carbon Adsorption	122.0	7205	189	2387	9781
Chlorine Contact Tanks	1.4	83	--	--	83
Chlorine Feed System	3.6	213	--	2783	2996
Sludge Holding	0.7	41	--	53	94
Vacuum Filtration (12,000 $Ft.^2$)	6.0	354	204	650	1208
Land Required (350 Acres)	1.8	106	--	--	106
Site Work and Piping	12.2	721	--	1017	1738
Garage and Shop	1.2	71	--	--	71
Administration and Laboratory Facilities	8.7	514	--	1497	2011
Instrumentation	2.8	165	--	137	302
Outfall	2.9	171	--	--	171
Total Construction Cost	349.7	20653	811	30778	52242
Engineering, Lgeal, Administration and Contingencies	104.9	6196	--	--	6196
Total Project Cost	454.6	26849	811	30778	58438

TABLE B-16

COST ESTIMATE
FOR
MOUTH OF HURON RIVER INDEPENDENT PHYSICAL-CHEMICAL TREATMENT PLANT
400 MGD - MUNICIPAL AND INDUSTRIAL
1000 MGD - PEAK STORM FLOW

	Capital Cost $\$x10^6$	Annual Capital Cost $\$x10^3$	Annual Replacement Cost $\$x10^3$	Annual Operation and Maintenance Cost $\$x10^3$	Total Annual Cost $\$x10^3$
M&I WASTEWATER TREATMENT					
Raw Waste Pumping	8.8	520	--	409	929
Pretreatment	1.4	83	--	445	528
Two-Stage Lime Clarification	27.4	1618	--	7141	8759
Activated Carbon Adsorption	65.0	3839	418	2878	7135
Chlorine Feed System	3.8	224	--	6014	6238
Sludge Thickening	5.0	295	--	337	632
STORMWATER TREATMENT					
Two-Stage Lime Clarification	42.0	2481	--	3959	6440
Multi-Media Filtration	33.0	1949	--	1071	3020
Activated Carbon Adsorption	122.0	7205	189	2387	9781
Chlorine Contact Tanks	1.4	83	--	--	83
Chlorine Feed System	3.6	213	--	2783	2996
Sludge Holding	0.7	41	--	53	94
Vacuum Filtration (12,000 $Ft.^2$)	6.0	354	204	650	1208
Recalcination-Incineration	29.8	1760	1024	4281	7065
Land Required (350 Acres)	1.8	106	--	--	106
Site Work and Piping	12.2	721	--	1017	1738
Garage and Shop	1.2	71	--	--	71
Administration and Laboratory Facilities	8.7	514	--	1497	2011
Instrumentation	2.8	165	--	137	302
Outfall	2.9	171	--	--	171
Total Construction Cost	379.5	22413	--	--	--
Engineering, Legal, Administration and Contingencies	113.8	6724	--	--	6724
Total Project Cost	493.3	29137	1835	35059	66031

TABLE B-17

COST ESTIMATE
FOR
HURON RIVER INDEPENDENT PHYSICAL-CHEMICAL TREATMENT PLANT
525 MGD - MUNICIPAL AND INDUSTRIAL
1000 MGD - PEAK STORM FLOW

	Capital Cost $\$x10^6$	Annual Capital Cost $\$x10^3$	Annual Replacement Cost $\$x10^3$	Annual Operation and Maintenance Cost $\$x10^3$	Total Annual Cost $\$x10^3$
M&I WASTEWATER TREATMENT					
Raw Waste Pumping	11.1	656	--	680	1336
Pretreatment	1.7	100	--	556	656
Two-Stage Lime Clarification	35.0	2067	--	9149	11216
Activated Carbon Adsorption	85.0	5020	547	3700	9267
Chlorine Feed System	4.6	272	--	9747	10019
Sludge Thickening	6.7	396	--	438	834
STORMWATER TREATMENT					
Two-Stage Lime Clarification	42.0	2481	--	3959	6440
Multi-Media Filtration	33.0	1949	--	1071	3020
Activated Carbon Adsorption	122.0	7205	189	2387	9781
Chlorine Contact Tanks	1.4	83	--	--	83
Chlorine Feed System	3.6	213	--	2783	2996
Sludge Holding	0.7	41	--	53	94
Vacuum Filtration (13,000)	6.7	396	227	788	1411
Land Required (375 Acres)	1.9	112	--	--	112
Site Work and Piping	13.6	803	--	1133	1936
Garage and Shop	1.4	83	--	--	83
Administration and Laboratory Facilities	9.7	573	--	1669	2242
Instrumentation	3.1	183	--	152	335
Outfall	2.9	171	--	--	171
Total Construction Cost	386.1	22804	963	38265	62032
Engineering, Legal, Administration and Contingencies	115.8	6841	--	--	6841
Total Project Cost	501.9	29645	963	38265	68873

TABLE B-18

COST ESTIMATE
FOR
MOUTH OF HURON RIVER INDEPENDENT PHYSICAL-CHEMICAL TREATMENT PLANT
525 MGD - MUNICIPAL AND INDUSTRIAL
1000 MGD - PEAK STORM FLOW

	Capital Cost $\$x10^6$	Annual Capital Cost $\$x10^3$	Annual Replacement Cost $\$x10^3$	Annual Operation and Maintenance Cost $\$x10^3$	Total Annual Cost $\$x10^3$
M&I WASTEWATER TREATMENT					
Raw Waste Pumping	11.1	656	--	680	1336
Pretreatment	1.7	100	--	556	656
Two-Stage Lime Clarification	35.0	2067	--	9149	11216
Activated Carbon Adsorption	85.0	5020	547	3700	9267
Chlorine Feed System	4.6	272	--	9747	10019
Sludge Thickening	6.7	396	--	438	834
STORMWATER TREATMENT					
Two-Stage Lime Clarification	42.0	2481	--	3959	6440
Multi-Media Filtration	33.0	1949	--	1071	3020
Activated Carbon Adsorption	122.0	7205	189	2387	9781
Chlorine Contact Tanks	1.4	83	--	--	83
Chlorine Feed System	3.6	213	--	2783	2996
Sludge Holding	0.7	41	--	53	94
Vacuum Filtration (13,300)	6.7	396	227	788	1411
Recalcination-Incineration	35.0	2067	1202	2292	5561
Land Required (375 Acres)	1.9	112	--	--	112
Site Work and Piping	13.6	803	--	1133	1936
Garage and Shop	1.4	83	--	--	83
Administration and Laboratory Facilities	9.7	573	--	1669	2242
Instrumentation	3.1	183	--	152	335
Outfall	2.9	171	--	--	171
Total Construction Cost	421.1	--	--	--	--
Engineering, Legal, Administration and Contingencies	126.3	7459	--	--	7459
Total Project Cost	547.4	32330	2165	40557	75052

TABLE B-19

COST ESTIMATE
FOR
HURON RIVER INDEPENDENT PHYSICAL-CHEMICAL TREATMENT PLANT
1371 MGD - MUNICIPAL AND INDUSTRIAL
1000 MGD - PEAK STORM FLOW

	Capital Cost $\$x10^6$	Annual Capital Cost $\$x10^3$	Annual Replacement Cost $\$x10^3$	Annual Operation and Maintenance Cost $\$x10^3$	Total Annual Cost $\$x10^3$
M&I WASTEWATER TREATMENT					
Raw Waste Pumping	34.3	2055	--	1331	3386
Pretreatment	5.3	313	--	1301	1614
Two-Stage Lime Clarification	10.0	5315	--	23086	28401
Activated Carbon Adsorption	210.0	12403	1352	9500	23255
Chlorination Feed System	8.3	490	--	23676	24166
Sludge Thickening	16.9	998	--	1122	2120
STORMWATER TREATMENT					
Two-Stage Lime Clarification	42.0	2481	--	3959	6440
Multi-Media Filtration	33.0	1949	--	1071	3020
Activated Carbon Adsorption	122.0	7205	189	2387	9781
Chlorine Contact Tanks	1.4	83	--	--	83
Chlorine Feed System	3.6	213	--	2783	2996
Sludge Holding	0.7	41	--	53	94
Vacuum Filtration (20800 $Ft.^2$)	10.2	602	347	1708	2657
Land Required (540 Acres)	2.7	159	--	--	159
Site Work and Piping	23.4	1382	--	1949	3331
Garage and Shop	2.3	138	--	--	138
Administration and Laboratory Facilities	16.7	986	--	2873	3859
Instrumentation	5.3	313	--	261	574
Outfall	4.3	253	--	--	253
Total Construction Cost	687.6	40609	1888	82143	124640
Engineering, Legal, Administartion and Contingencies	206.3	12183	--	--	12183
Total Project Cost	893.9	52792	1888	82143	136823

TABLE B-20

COST ESTIMATE
FOR
MOUTH OF HURON RIVER INDEPENDENT PHYSICAL-CHEMICAL TREATMENT PLANT
1371 MGD - MUNICIPAL AND INDUSTRIAL
1000 MGD - PEAK STORM FLOW

	Capital Cost$_6$ $x10^6	Annual Capital Cost$_3$ $x10^3	Annual Replacement Cost$_3$ $x10^3	Annual Operation and Maintenance Cost$_3$ $x10^3	Total Annual Cost$_3$ $x10^3
M&I WASTEWATER TREATMENT					
Raw Waste Pumping	34.8	2055	--	1331	3386
Pretreatment	5.3	313	--	1301	1614
Two-Stage Lime Clarification	90.0	5315	--	23086	28401
Activated Carbon Adsorption	210.0	12403	1352	9500	23255
Chlorination Feed System	8.3	490	--	23676	24166
Sludge Thickening	16.9	998	—	1122	2120
STORMWATER TREATMENT					
Two-Stage Lime Clarification	42.0	2481	--	3959	6440
Multi-Media Filtration	33.0	1949	--	1071	3020
Activated Carbon Adsorption	122.0	7205	189	2387	9781
Chlorine Contact Tanks	1.4	83	--	--	83
Chlorine Feed System	3.6	213	--	2783	2996
Sludge Holding	0.7	41	--	53	94
Vacuum Filtration (20,800 Ft.^{2})	10.2	602	347	1708	2657
Recalcination (6000 T/D)	68.0	4016	2337	5979	12332
Land Required (540 Acres)	2.7	159	--	--	159
Site Work and Piping	23.4	1382	--	1949	3331
Garage and Shop	2.3	138	--	--	138
Administration and Lab Facilities	16.7	986	--	2873	3859
Instrumentation	5.3	313	--	261	574
Outfall	4.3	253	--	--	253
Total Construction Cost	755.6	44625	4225	88122	136972
Engineering, Legal, Administration and Contingencies	226.7	13389	--	--	13389
Total Project Cost	972.3	58014	4225	88122	150361

TABLE B-21

COST ESTIMATE
FOR
DETROIT INDEPENDENT PHYSICAL-CHEMICAL TREATMENT PLANT
806 MGD - MUNICIPAL AND INDUSTRIAL WASTE

	Capital Cost $\$x10^6$	Annual Capital Cost $\$x10^3$	Annual Replacement Cost $\$x10^3$	Annual Operation and Maintenance Cost $\$x10^3$	Total Annual Cost $\$x10^3$
Raw Waste Pumping	--	--	--	788	788
Pretreatment	--	--	--	824	824
Two-Stage Lime Clarification	44.6	2634	--	12944	15578
Activated Carbon Adsorption	128.0	7560	824	5693	14077
Chlorine Feed System	6.0	354	--	11872	12226
Sludge Thickening	--	--	--	657	657
Vacuum Filtration	--	--	170	876	1046
Land Required (180) (100 Acres)	.5	30	--	--	30
Site Work and Piping	7.4	437	--	616	1053
Garage and Shop	.7	41	--	--	41
Administration and Laboratory Facilities	--	--	--	1068	1068
Instrumentation	2.0	118	--	98	216
Outfall	--	--	--	--	--
Total Construction Cost	189.2	11174	994	35436	47604
Engineering, Legal, Administration and Contingencies	56.8	3352	--	--	3352
Total Project Cost	246.0	14526	994	35436	50956

TABLE B-22

COST ESTIMATE
FOR
DETROIT INDEPENDENT PHYSICAL-CHEMICAL TREATMENT PLANT
806 MGD - MUNICIPAL AND INDUSTRIAL WASTE

	Capital Cost $\$x10^6$	Annual Capital Cost $\$x10^3$	Annual Replacement Cost $\$x10^3$	Annual Operation and Maintenance Cost $\$x10^3$	Total Annual Cost $\$x10^3$
Raw Waste Pumping	--	--	--	788	788
Pretreatment	--	--	--	824	824
Two-Stage Lime Clarification	44.6	2634	--	12944	15578
Activated Carbon Adsorption	128.0	7560	824	5693	14077
Chlorine Feed system	6.0	354	--	11872	12226
Sludge Thickening	--	--	--	657	657
Vacuum Filtration	--	--	170	876	1046
Recalcination-Incineration (1,500+ 1,500 T/D)	18.5	1093	1202	3088	5383
Land Required (180) (100 Acres)	.5	30	--	--	30
Site Work and Piping	7.4	437	--	616	1053
Garage and Shop	.7	41	--	--	41
Administration and Laboratory Facilities	--	--	--	1068	1068
Instrumentation	2.0	118	--	98	216
Outfall	--	--	--	--	--
Total Construction Cost	207.7	12267	2196	38524	52987
Engineering, Legal, Administration and Contingencies	62.3	3680	--	--	3680
Total Project Cost	270.0	15947	2196	38524	56667

TABLE B-23

COST ESTIMATE
FOR
ADRIAN-TECUMSEH INDEPENDENT PHYSICAL-CHEMICAL TREATMENT PLANT
MUNICIPAL-INDUSTRIAL AND STORM FLOW
22.5 MGD - PEAK STORM FLOW (AVERAGE 15.3)

	Capital Cost$_6$ $x10	Annual Capital Cost$_3$ $x10	Annual Replacement Cost$_3$ $x10	Annual Operation and Maintenance Cost$_3$ $x10	Total Annual Cost$_3$ $x10
Raw Waste Pumping	.8	47	--	21	68
Pretreatment	.2	12	--	29	41
Two-Stage Lime Clarification	1.7	100	--	302	402
Activated Carbon Adsorption	4.0	236	26	140	402
Chlorine Feed System	.6	35	--	265	300
Sludge Thickening	.3	18	--	12	30
Vacuum Filtration	.3	18	10	33	61
Land Required (20 Acres	.10	6	--	--	6
Site Work and Piping	.34	20	--	28	48
Administration and Laboratory Facilities	.24	15	--	--	15
Garage and Shop	.03	2	--	2	4
Instrumentation	.07	4	--	--	4
Outfall	.07	4	--	7	11
Total Construction Cost	8.7	517	36	839	1392
Engineering, Legal, Administration and Contingency	2.6	154	--	--	154
Total Project Cost	11.3	671	36	839	1546

TABLE B-24

COST ESTIMATE
FOR
ADRIAN-TECUMSEH INDEPENDENT PHYSICAL-CHEMICAL TREATMENT PLANT
MUNICIPAL-INDUSTRIAL AND STORM FLOW
22.5 MGD - PEAK STORM FLOW (AVERAGE 15.3)

	Capital Cost$_6$ $x10$^6	Annual Capital Cost$_3$ $x10$^3	Annual Replacement Cost$_3$ $x10$^3	Annual Operation and Maintenance Cost$_3$ $x10$^3	Total Annual Cost$_3$ $x10$^3
Raw Waste Pumping	.8	47	--	21	68
Pretreatment	.2	12	--	29	41
Two-Stage Lime Clarification	1.7	100	--	302	402
Activated Carbon Adsorption	4.0	236	26	140	402
Chlorine Feed System	.6	35	--	265	300
Sludge Thickening	.3	18	—	12	30
Vacuum Filtration	.3	18	10	33	61
Recalcination-Incineration (70 T/D)	1.8	106	60	85	251
Land Required (20 Acres	.10	6	--	--	6
Site Work and Piping	.34	20	--	28	48
Administration and Laboratory Facilities	.24	15	--	--	15
Garage and Shop	.03	2	--	2	4
Instrumentation	.07	4	--	--	4
Outfall	.07	4	--	7	11
Total Construction Cost	10.5	623	96	924	1643
Engineering, Legal, Administration and Contingency	3.2	189	--	--	189
Total Project Cost	13.7	812	96	924	1832

TABLE B-25

COST ESTIMATE
FOR
PLYMOUTH OR YPSILANTI INDEPENDENT PHYSICAL-CHEMICAL TREATMENT PLANT
225 MGD - PEAK STORM FLOW

	Capital Cost $\$x10^6$	Annual Capital Cost $\$x10^3$	Annual Replacement Cost $\$x10^3$	Annual Operation and Maintenance Cost $\$x10^3$	Total Annual Cost $\$x10^3$
Two Stage Lime Clarification	10.6	626	--	983	1609
Multi-Media Filtration	7.5	443	--	393	836
Carbon Adsorption	30.2	1784	47	681	2512
Chlorine Contact Tanks	0.4	24	--	--	24
Chlorination Feed System	0.7	41	--	317	358
Sludge Holding	0.3	18	--	23	41
Vacuum Filtration	1.3	77	20	73	170
Instrumentation	0.5	30	--	25	55
Land Required (85 Acres)	0.1	7	--	--	7
Site Work and Piping	2.1	124	--	156	280
Garage and Shop	0.3	18	--	--	18
Administration and Laboratory Facilities	0.9	53	--	157	210
Outfall	0.1	6	--	--	6
Total Construction Cost	55.0	3251	67	2808	6126
Engineering, Legal, Administration and Contingencies	16.5	974	--	--	974
Total Project Cost	71.5	4225	67	2808	7100

TABLE B-26

COST ESTIMATE
FOR
PLYMOUTH OR YPSILANTI INDEPENDENT PHYSICAL-CHEMICAL TREATMENT PLANT
225 MGD - PEAK STORM FLOW

	Capital Cost$_6$ $x10	Annual Capital Cost$_3$ $x10	Annual Replacement Cost$_3$ $x10	Annual Operation and Maintenance Cost$_3$ $x10	Total Annual Cost$_3$ $x10
Two Stage Lime Clarification	10.6	626	--	983	1609
Multi-Media Filtration	7.5	443	--	393	836
Carbon Adsorption	30.2	1784	47	681	2512
Chlorine Contact Tanks	0.4	24	--	--	24
Chlorination Feed System	0.7	41	--	317	358
Sludge Holding	0.3	18	--	23	41
Vacuum Filtration	1.3	77	20	73	170
Recalcination	1.8	106	28	538	672
Instrumentation	0.5	30	--	25	55
Land Required (85 Acres)	0.1	7	--	--	7
Site Work and Piping	2.1	124	--	156	280
Garage and Shop	0.3	18	--	--	18
Administration and Laboratory Facilities	0.9	53	--	157	210
Outfall	0.1	6	--	--	6
Total Construction Cost	56.8	3357	95	3346	6798
Engineering, Legal, Administration and Contingencies	17.0	1004	--	--	1004
Total Project Cost	73.8	4361	95	3346	7802

TABLE B-27

COST ESTIMATE
FOR
MACOMB COUNTY INDEPENDENT PHYSICAL-CHEMICAL TREATMENT PLANT
600 MGD - PEAK STORM FLOW

	Capital Cost, $x10^6	Annual Capital Cost, $x10^3	Annual Replacement Cost, $x10^3	Annual Operation and Maintenance Cost, $x10^3	Total Annual Cost, $x10^3
Two Stage Lime Clarification	26.0	1536	--	2445	3981
Multi-Media Filtration	19.5	1152	--	754	1906
Carbon Adsorption	75.0	4430	116	1537	6083
Chlorine Contact Tanks	0.9	53	--	--	53
Chlorination Feed System	2.5	148	--	1670	1818
Sludge Holding	0.5	30	--	36	66
Vacuum Filtration	2.3	136	36	137	309
Recalcination	2.9	171	45	1060	1276
Instrumentation	1.0	59	--	50	109
Land Required (160 Acres)	0.2	13	--	--	13
Site Work and Piping	4.6	272	--	350	622
Garage and Shop	0.5	32	--	--	32
Administration and Laboratory Facilities	1.7	100	--	273	373
Outfall	2.0	118	--	--	118
Total Cosntruction Cost	139.6	8250	197	8312	16759
Engineering, Legal, Administration and Contingencies	41.9	2475	--	--	2475
Total Project Cost	181.5	10725	197	8312	19234

TABLE B-28

COST ESTIMATE
FOR
MACOMB COUNTY INDEPENDENT PHYSICAL-CHEMICAL TREATMENT PLANT
600 MGD - PEAK STORM FLOW

	Capital Cost $\$x10^6$	Annual Capital Cost $\$x10^3$	Annual Replacement Cost $\$x10^3$	Annual Operation and Maintenance Cost $\$x10^3$	Total Annual Cost $\$x10^3$
Two-Stage Lime Clarification	26.0	1536	--	2445	3981
Multi-Media Filtration	19.5	1152	--	754	1906
Carbon Adsorption	75.0	4430	116	1537	6083
Chlorine Contact Tanks	0.9	53	--	--	53
Chlorination Feed System	2.5	148	--	1670	1818
Sludge Holding	0.5	30	--	36	66
Vacuum Filtration	2.3	136	36	137	309
Instrumentation	1.0	59	--	50	109
Land Required (160 Acres)	0.2	13	--	--	13
Site Work and Piping	4.6	272	--	350	622
Garage and Shop	0.5	32	--	--	32
Administration and Laboratory Facilities	1.7	100	--	273	373
Outfall	2.0	118	--	--	118
Total Construction Cost	136.7	8079	152	7252	15483
Engineering, Legal, Administration and Contingencies	41.0	2422	--	--	2422
Total Project Cost	177.7	10501	152	7252	17905

TABLE C-1

Lagoon System - St. Clair-Sanilac County #1

Design Flows	
Average Daily Municipal-Industrial Flow - MGD	1139
Maximum Daily Municipal-Industrial Flow - MGD	1366
Average Annual Storm Flow - BG	220.8
Maximum Annual (25 yr. Storm Flow - BG	493
Maximum Daily Storm Flow (from storage) - MGD	2175
Grit Removal & Screening	
Design Flow - MGD	4464
Number of Grit Chamber Units	48
Flow Rate Per Unit - MGD	93
Unit Length - Ft.	115
Unit Width - Ft.	18
Unit Water Depth - Ft.	8
Grit Deposition - Ft. 3/MGD	5
*Total Deposition over 50 yr. - Million Yd.^{3}	3.85
Disposal Area Required - Acres	27
Aeration Lagoons	
Design Flow - MGD	3520
Average Flow - MGD	1744
Number of Lagoons	44
Capacity Per Lagoon - MGD	80
Detention Time - Days	3
Volume Per Lagoon - MG	253
Volume Per Lagoon - Acre-Ft.	775
Land Area Per Lagoon - Acres	57
Total Land Area - Acres	2508
Total Land Area - Sq. Mi.	3.9
Number of Aerators Per Lagoon	36
Total Number of Aerators	1584
Water Depth - Ft.	15
Freeboard - Ft.	5
Dike Height - Ft.	20
Storage Lagoons	
Design Flow - MGD	2490
Storage Design Period - Days	155
Storage Volume Required - MG	385,950
Number of Lagoons	31
Volume Per Lagoon - MG	12,679
Volume Per Lagoon - Acre-Ft.	38,861
Useful Depth - Ft.	20
Freeboard - Ft.	7
Dead Storage - Ft.	3
Dike Height - Ft.	30
Land Area Per Lagoon - Acres	2,000
Total Land Area - Acres	62,000
Total Land Area - Sq. Mi.	97
Seepage Control	
Drainage Channel - Miles	63.7
Pump Station Spacing - Miles	4
Drainage Pump Stations	16
Pumping Capacity - GPM	25,000
Pumping Head - Feet	38
Observation Well Spacing - Feet	2,000
Number of Well Clusters	168
Sludge Disposal	
Dry Solids Generation - Tons/MG	0.8
*Total Dry Solids Generated - Tons/Year	333,000
Dry Solids Application Rate - Tons/Acre/Year	10
Sludge Disposal Area - Sq. Miles	52
Minimum Sludge Velocity in Pipelines - Ft./Sec.	3.5
Number of Dredge-Plow Systems	3

*Calculated for M & I flow only since stormwater would be free of grit.

CAPITAL COST SUMMARY

St. Clair - Sanilac County #1

GRIT REMOVAL:			
Grit Chambers	48 Units	$70,050/Unit	$3,362,000
Grit Removal Equipment	48 Units	$13,000/unit	624,000
Grit Loading Equipment	2 Units	$40,000/Unit	80,000
TOTAL:			$4,066,000
AERATED LAGOONS:			
Earthwork	14,876,000c.y.	$.81/c.y.	$ 12,050,000
Lining:			
6" Concrete Wave Protection	206,000c.y.	$80/c.y.	16,515,000
8" Soil Cement	1,188,000s.y.	$2.33/s.y.	2,768,000
12" Clay Lining	9,583,000s.y.	$.68/s.y.	6,517,000
Roadway-Bituminous	446,000s.y.	$6.50/s.y.	2,900,000
Flumes	127,000c.y.	$175/c.y.	22,287,000
Aerators - 150HP	1584 Units	$35,000/Unit	55,440,000
Electrical Equipment		$6,000/Aerator Unit	9,504,000
Land	2,508 Ac.	$751/Ac.	1,884,000
TOTAL:			$129,865,000
STORAGE LAGOONS:			
Earthwork	131,870,000c.y.	$.81/c.y.	$106,817,000
Lining:			
8" Soil Cement	15,251,000s.y.	$2.33/s.y.	35,535,000
8" Clay Lining	12,536,000s.y.	$0.45/s.y.	5,641,000
Roadway-Gravel	857,000s.y.	$2.20/s.y.	1,885,000
Interconnecting Structures	36 Units	$86,500/Unit	3,114,000
Outlet Structure With Chlorination Facilities	16 Units	$291,400/Unit	4,662,000
Chlorination Building	8 Units	$250,000/Unit	$ 2,000,000
Conveyance System Between Lagoons	2,600 LF	$305/LF	793,000
Land	62,000 Ac.	$751/Ac.	46,562,000
TOTAL STORAGE LAGOON SYSTEM:			$207,009,000
SEEPAGE CONTROL:			
Drainage Channel	4,280,000c.y.	$.81/c.y.	$ 3,466,000
Drainage Pump Stations	16 Units	$42,000/Unit	672,000
Observation Wells			
1-1/4" Casing	16,800 Ft.	$3.50/Ft.	59,000
Development	907 Hr.	$25/Hr.	23,000
Plunger Cylinder	168 Units	$140/Unit	24,000
TOTAL SEEPAGE CONTROL SYSTEM:			$ 4,244,000
SLUDGE MANAGEMENT:			
Dredge-Plow Systems	8 Units	$371,800/Unit	$ 2,974,000
Distribution Piping:			
15" Pipe	103,000 LF	$23/LF	2,369,000
22" Pipe	93,000 LF	$34/LF	3,162,000
24" Pipe	42,000 LF	$36/LF	1,512,000
Fittings (10% Piping Cost)			704,000
Pump Stations	875 HP	$250/HP	219,000
Underdrain System	52 Sq. Mi.	$408,000/Sq.Mi.	21,216,000
Land	33,300 Ac.	$751/Ac.	25,008,000
TOTAL SLUDGE MANAGEMENT:			$56,460,000

TOTAL CAPITAL COST

CONSTRUCTION COSTS:	
Grit Removal & Screening	$4,066,000
Aerated Lagoons	$127,972,000
Storage Lagoons	$160,447,000
Seepage Control	$4,244,000
Sludge Management	$31,452,000
TOTAL:	$328,181,000
Engineering, Administration, Legal & Contingencies	$98,454,000
Land	$73,454,000
TOTAL CAPITAL COST:	$500,089,000
AMORTIZED CAPITAL COST (5-1/2%, 50 Years)	$29,536,000

AMORTIZED REPLACEMENT COST :

Item	Replacement Period	Capital Cost	Amortized Cost
Grit Removal & Screening:			
Grit & Screening Equipment	25 years	$ 704,000	$ 10,900
Aerated Lagoons			
Aerators	10 years	55,440,000	4,060,000
Sludge Management			
Header Pipe & Pump Station	25 years	7,966,000	123,400
TOTAL:			$4,194,300

OPERATION & MAINTENANCE COSTS

LABOR:	
Grit Removal & Screening	
Annual Man-Hours	259,000
Aerated Lagoons	
Annual Man-Hours	46,000
Storage Lagoons	
Annual Man-Hours	170,000
Seepage Control (1200 Man-Hours/Pump Station)	
Annual Man-Hours	19,000
Sludge Management	
Annual Man-Hours	250,000
TOTAL ANNUAL MAN-HOURS:	744,000
Number of Men Required	357
TOTAL ANNUAL COST ($13,200/Man + 25%)	$5,890,000
MATERIALS & SUPPLIES:	
Grit Removal & Screening (0.1% Cap. Cost)	$ 4,000
Aerated Lagoons (0.5% Cap. Cost)	640,000
Storage Lagoons (0.1% Cap. Cost)	160,000
Seepage Control (0.5% Cap. Cost)	21,000
Sludge Management:	
Dredge-Plow System (10% Cap. Cost)	297,000
Distribution System (5% Cap. Cost)	398,000
TOTAL ANNUAL MATERIAL & SUPPLY COST:	$ 1,520,000

POWER: @$.0125/KWHR

Source	Average Daily HP	Annual Cost
Aerated Lagoons	237,600HP-365 days	$26,017,000
Drainage Pump Stations	5,100HP-365 days	558,000
Sludge Pump Stations	1,130HP-1600 hrs.	23,000
TOTAL POWER COST:		$26,598,000

CHEMICALS:		
Chlorine @ $0.05/lb		
Dosage 8mg/l	85,000 Tons/Yr.	$ 8,500,000
TOTAL ANNUAL O & M COST:		$42,508,000

TABLE C-2

Lagoon System - St. Clair-Sanilac County #2

Design Flows	
Average Daily Municipal-Industrial Flow - MGD	1139
Maximum Daily Municipal-Industrial Flow - MGD	1366
Average Annual Storm Flow - BG	12.8
Maximum Annual (25 yr.) Storm Flow - BG	28.5
Maximum Daily Storm Flow (from Storage) - MGD	125
Grit Removal & Screening	
Design Flow - MGD	1832
Number of Screening Units	14
Flow Rate Per Unit - MGD	130
Screening Surface Area Per Unit - $Ft.^2$	80
Number of Grit Units	20
Flow Rate Per Unit - MGD	93
Unit Length - Ft.	115
Unit Width - Ft.	18
Unit Water Depth - $Ft.^3$	8
Grit Deposition - $Ft.^3$/MGD	5
Total Deposotion over 50 yr. - 10^3 $yds.^3$	3,850
Disposal Area Required - Acres	27
Aerated Lagoons	
Design Flow - MGD	1520
Average Flow - MGD	1174
Number of Lagoons	19
Capacity Per Lagoon - MGD	80
Detention Time - Days	3
Volume Per Lagoon - MG	253
Volume Per Lagoon - Acre-Ft.	775
Land Area Per Lagoon - Acres	57
Total Land Area - Acres	1083
Total Land Area - Sq. Mi.	1.7
Number of Aerators Per Lagoon	36
Total Number of Aerators	684
Water Depth - Ft.	15
Freeboard - Ft.	5
Dike Height - Ft.	20
Storage Lagoons	
Design Flow - MGD	1217
Storage Design Period - Days	155
Storage Volume Required - MG	188,635
Number of Lagoons	15
Volume Per Lagoon - MG	12,679
Volume Per Lagoon - Acre-Ft.	38,861
Useful Depth - Ft.	20
Freeboard - Ft.	7
Dead Storage - Ft.	3
Dike Height - Ft.	30
Land Area Per Lagoon - Acres	2000
Total Land Area - Acres	30,000
Total Land Area - Sq. Miles	47
Seepage Control	
Drainage Channel - Miles	42.4
Pump Station Spacing - Miles	4
Drainage Pump Stations	11
Pumping Head - Ft.	38
Observation Well Spacing - Ft.	2000
Number of Well Clusters	112
Sludge Disposal	
Dry Solids Generation - Tons/MG	0.8
Total Dry Solids Generated - Tons/Year	330,000
Dry Solids Application Rate - Tons/Acre/Year	10
Sludge Disposal Area - Sq. Miles	52
Minimum Sludge Velocity in Pipelines - Ft./Sec.	3.5
Number of Dredge-Plow Systems	8

CAPITAL COST SUMMARY

St. Clair - Sanilac County #2

GRIT REMOVAL:			
Grit Chambers	20 Units	$70,050/Unit	$ 1,401,000
Grit Removal Equipment	20 Units	$13,000/Unit	260,000
Grit Loading Equipment	1 Unit	$40,000/Unit	40,000
SCREENING:			
Structure	14 Units	$52,800/Unit	739,000
Equipment	14 Units	$40,000/Unit	560,000
TOTAL GRIT REMOVAL & SCREENING:			$ 3,000,000
AERATED LAGOONS:			
Earthwork	5,542,000c.y.	$.81/c.y.	4,489,000
Lining:			
6" Concrete Wave Protection	70,000c.y.	$80/c.y.	5,600,000
8" Soil Cement	405,000s.y.	$2.33/s.y.	944,000
12" Clay Lining	4,138,000s.y.	$0.68/s.y.	2,814,000
Roadway-Bituminous	166,000s.y.	$6.50/s.y.	1,079,000
Flumes	96,000c.y.	$175/c.y.	16,800,000
Aerators - 150HP	684 Units	$35,000/Unit	23,940,000
Electrical Equipment		$6,000/Aerator Unit	4,104,000
Land	1,083 Ac.	$751/Ac.	813,000
TOTAL:			$ 60,583,000
STORAGE LAGOONS:			
Earthwork	70,110,000c.y.	$.81/c.y.	$ 56,789,000
Lining:			
8" Soil Cement	7,501,000s.y.	$2.33/s.y.	17,476,000
8" Clay Lining	8,358,000s.y.	$0.45/s.y.	3,761,000
Roadway-Gravel	571,000s.y.	$2.20/s.y.	1,256,000
Interconnecting Structures	18 Units	$86,500/Unit	$ 1,557,000
Outlet Structure with Chlorination Facilities	8 Units	$291,400/Unit	2,331,000
Chlorination Building	4 Units	$250,000/Unit	1,000,000
Conveyance System Between Lagoons	2,600 LF	$305/LF	793,000
Land	30,000Ac.	$751/Ac.	22,530,000
TOTAL STORAGE LAGOON SYSTEM:			$107,493,000
SEEPAGE CONTROL:			
Drainage Channel	2,851,000c.y.	$.81/c.y.	2,309,000
Drainage Pump Stations	11 Units	$42,000/Unit	462,000
Observation Wells:			
1-1/4" Casing	11,200 Ft.	$3.50/Ft.	39,000
Development	605 Hr.	$25/Hr.	15,000
Plunger Cylinder	112 Units	$140/Unit	16,000
TOTAL SEEPAGE CONTROL SYSTEM:			$ 2,841,000
SLUDGE MANAGEMENT:			
Dredge-Plow Systems	8 Units	$371,800/Unit	2,974,000
Distribution Piping:			
15" Pipe	103,000 LF	$23/LF	2,369,000
22" Pipe	93,000 LF	$34/LF	3,162,000
24" Pipe	42,000 LF	$36/LF	1,512,000
Fittings (10% Piping Cost)			704,000
Pump Stations	875 HP	$250/HP	219,000
Underdrain System	52 Sq. Mi.	$408,000/Sq.Mi.	21,216,000
Land	33,300 Ac.	$751/Ac.	25,008,000
TOTAL SLUDGE MANAGEMENT:			$ 56,460,000

TOTAL CAPITAL COST

CONSTRUCTION COSTS:	
Grit Removal & Screening	$ 3,000,000
Aerated Lagoons	59,770,000
Storage Lagoons	84,963,000
Seepage Control	2,841,000
Sludge Management	31,452,000
TOTAL:	$182,026,000
Engineering, Administration, Legal & Contingencies	54,608,000
Land	48,351,000
TOTAL CAPITAL COST:	$284,985,000

AMORTIZED CAPITAL COST (5-1/2%, 50 Years)

AMORTIZED REPLACEMENT COST:

Item	Replacement Period	Capital Cost	Amortized Cost
Grit Removal & Screening:			
Grit & Screening Equipment	25 years	$ 300,000	$ 4,600
Aerated Lagoons:			
Aerators	10 years	$23,940,000	1,753,000
Sludge Management:			
Header Pipe & Pump Station	25 years	7,966,000	123,400
TOTAL:			$ 1,881,000

OPERATION & MAINTENANCE COSTS

LABOR:	
Grit Removal & Screening	
Annual Man-Hours	190,000
Aerated Lagoons	
Annual Man-Hours	17,000
Storage Lagoons	
Annual Man-Hours	88,000
Seepage Control (1200 Man-Hours/Pump Station)	
Annual Man-Hours	13,000
Sludge Management	
Annual Man-Hours	250,000
TOTAL ANNUAL MAN-HOURS:	558,000
Number of Men Required	268
TOTAL ANNUAL COST ($13,200/Man + 25%):	$ 4,428,000
MATERIALS & SUPPLIES:	
Grit Removal & Screening (0.1% Cap. Cost)	$ 3,000
Aerated Lagoons (0.5% Cap. Cost)	299,000
Storage Lagoons (0.1% Cap. Cost)	85,000
Seepage Control (0.5% Cap. Cost)	14,000
Sludge Management:	
Dredge-Plow System (10% Cap. Cost)	297,000
Distribution System (5% Cap. Cost)	398,000
TOTAL ANNUAL MATERIAL & SUPPLY COST:	$ 1,096,000

POWER: @ $.0125/KWHR

Source	Average Daily HP	Annual Cost
Aerated Lagoons	102,600-365 days	$11,235,000
Drainage Pump Stations	3,500-365 days	380,000
Sludge Pump Stations	1130 HP-1600 hrs.	23,000
TOTAL POWER COST:		$11,638,000

CHEMICALS:		
Chlorine @ $0.05/lb		
Dosage 8mg/l	14,300 Tons/Yr.	$ 1,430,000
TOTAL ANNUAL O & M COST:		$18,592,000

TABLE C-3

Lagoon System - St. Clair County #3

Design Flows	
Average Daily Municipal-Industrial Flow - MGD	187
Maximum Daily Municipal-Industrial Flow - MGD	225
Average Annual Storm Flow - BG	12.8
Maximum Annual (25 yr.) Storm Flow - BG	28.5
Maximum Daily Storm Flow (from storage) - MGD	125
Grit Removal & Screening	
Design Flow - MGD	406
Number of Screening Units	3
Flow Rate Per Unit - MGD	130
Screening Surface Area Per Unit - $Ft.^2$	80
Number of Grit Units	4
Flow Rate Per Unit - MGD	93
Unit Length - Ft.	115
Unit Width - Ft.	18
Unit Water Depth - $Ft.^3$	8
Grit Deposition - $Ft.^3$/MGD	5
Total Deposition Over 50 yr. - $10^3 yds.^3$	632
Disposal Area Required - Acres	4.5
Aerated Lagoons	
Design Flow - MGD	350
Average Flow - MGD	222
Number of Lagoons	5
Capacity Per Lagoon - MGD	70
Detention Time - Days	3
Volume Per Lagoon - MG	210
Volume Per Lagoon - Acre-Ft.	644
Land Area Per Lagoon - Acres	43
Total Land Area - Acres	215
Number of Aerators Per Lagoon	32
Total Number of Aerators	160
Water Depth - Ft.	15
Freeboard - Ft.	5
Dike Height - Ft.	20
Storage Lagoons	
Design Flow - MGD	265
Storage Design Period - Days	155
Storage Volume Required - MG	41,075
Number of Lagoons	4
Volume Per Lagoon - MG	10,269
Volume Per Lagoon - Acre-Ft.	31,514
Useful Depth - Ft.	20
Freeboard - Ft.	7
Dead Storage - Ft.	3
Dike Height - Ft.	30
Land Area Per Lagoon - Acres	1575
Total Land Area - Acres	6300
Total Land Area - Sq. Miles	10
Seepage Control	
Drainage Channel - Miles	12.6
Pump Station Spacing - Miles	4
Drainage Pump Stations	3
Pumping Head - Ft.	38
Observation Well Spacing - Ft.	2000
Number of Well Clusters	33
Sludge Disposal	
Dry Solids Generation - Tons/MG	0.8
Total Dry Solids Generated - Tons/Year	54,604
Dry Solids Application Rate - Tons/Acre/Year	10
Sludge Disposal Area - Sq. Miles	8.5
Minimum Sludge Velocity in Pipelines - Ft./Sec.	3.5
Number of Dredge-Plow Systems	2

CAPITAL COST SUMMARY

St. Clair County #3

GRIT REMOVAL:			
Grit Chambers	4 Units	$70,050/Unit	$ 280,000
Grit Removal Equipment	4 Units	$13,000/Unit	52,000
Grit Loading Equipment	1 Unit	$40,000/Unit	40,000
SCREENING:			
Structure	3 Units	$52,000/Unit	156,000
Equipment	3 Units	$40,000/Unit	120,000
TOTAL GRIT REMOVAL & SCREENING:			$ 648,000
AERATED LAGOONS:			
Earthwork	1,900,000c.y.	$.81/c.y.	$ 1,539,000
Lining:			
6" Concrete Wave Protection	20,400c.y.	$80/c.y.	1,630,000
8" Soil Cement	117,000s.y.	$2.33/s.y.	273,000
12" Clay Lining	822,000s.y.	$0.68/s.y.	559,000
Roadway-Bituminous	57,000s.y.	$6.50/s.y.	371,000
Plumes	21,900c.y.	$175/c.y.	3,832,000
Aerators - 150 HP	160 Units	$35,000/Unit	5,600,000
Electrical Equipment		$6,000/Aerator Unit	960,000
Land	215 Ac.	$751/Ac.	161,000
TOTAL:			$14,925,000
STORAGE LAGOONS:			
Earthwork	17,772,000c.y.	$.81/c.y.	$14,395,000
Lining:			
8" Soil Cement	2,218,000s.y.	$2.33/s.y.	5,168,000
8" Clay Lining	2,472,000s.y.	$0.45/s.y.	1,112,000
Roadway-Gravel	253,000s.y.	$2.20/s.y.	558,000
Interconnecting Structures	4 Units	$86,500/Unit	$ 346,000
Outlet Structure With Chlorination Facilities	2 Units	$291,400/Unit	583,000
Chlorination Building	1 Unit	$250,000/Unit	250,000
Land	6,300/Ac.	$751/Ac.	4,731,000
TOTAL STORAGE LAGOON SYSTEM:			$27,145,000
SEEPAGE CONTROL:			
Drainage Channel	900,000c.y.	$.81/c.y.	$ 729,000
Drainage Pump Stations	4 Units	$42,000/Unit	168,000
Observation Wells:			
1-1/4" Casing	3,500 Ft.	$3.50/Ft.	12,000
Development	189 HP	$25/Hr.	5,000
Plunger Cylinder	35 Units	$140/Unit	5,000
TOTAL SEEPAGE CONTROL SYSTEM:			$ 919,000
SLUDGE MANAGEMENT:			
Dredge-Plow Systems	2 Units	$371,800/Unit	$ 744,000
Distribution Piping:			
16" Pipe	22,000 LF	$24/LF	528,000
20" Pipe	17,000 LF	$30/LF	510,000
Fittings (10% Piping Cost)			104,000
Pump Stations	200 HP	$250/HP	50,000
Underdrain System	8.3 Sq. Mi.	$408,000/Sq.Mi.	3,388,000
Land	5,460 Ac.	$751/Ac.	4,100,000
TOTAL SLUDGE MANAGEMENT:			$ 9,424,000

TOTAL CAPITAL COST

CONSTRUCTION COSTS:	
Grit Removal & Screening	$ 648,000
Aerated Lagoons	14,764,000
Storage Lagoons	22,414,000
Seepage Control	919,000
Sludge Management	5,324,000
TOTAL:	$44,069,000
Engineering, Administration, Legal & Contingencies	$13,221,000
Land	8,992,000
TOTAL CAPITAL COST:	$66,282,000
AMORTIZED CAPITAL COST (5-1/2%, 50 Years) :	$ 3,915,000

AMORTIZED REPLACEMENT COST:

Item	Replacement Period	Capital Cost	Amortized Cost
Grit Removal & Screening:			
Grit & Screening Equipment	25 years	$ 212,000	$ 3,300
Aerated Lagoons:			
Aerators	10 years	5,600,000	410,100
Sludge Management:			
Header Pipe & Pump Station	25 years	1,192,000	18,500
TOTAL:			$ 431,900

OPERATION & MAINTENANCE COSTS

LABOR:	
Grit Removal & Screening	
Annual Man-Hours	40,000
Aerated Lagoons	
Annual Man-Hours	6,500
Storage Lagoons	
Annual Man-Hours	20,400
Seepage Control (1200 Man-Hours/Pump Station)	
Annual Man-Hours	3,600
Sludge Management	
Annual Man-Hours	41,000
TOTAL ANNUAL MAN-HOURS:	111,500
Number of Men Required	54
TOTAL ANNUAL COST ($13,200/Man + 25%)	$ 891,000
MATERIALS & SUPPLIES:	
Grit Removal & Screening (0.1% Cap. Cost)	$ 600
Aerated Lagoons (0.5% Cap. Cost)	73,800
Storage Lagoons (0.1% Cap. Cost)	22,400
Seepage Control (0.5% Cap. Cost)	4,600
Sludge Management:	
Dredge-Plow System (10% Cap. Cost)	74,400
Distribution System (5% Cap. Cost)	59,700
TOTAL ANNUAL MATERIAL & SUPPLY COST:	$ 235,500

POWER: @ $.0125/KWHR

Source	Average Daily HP	Annual Cost
Aerated Lagoons	24,000HP-365 days	$ 2,628,000
Drainage Pump Stations	950HP-365 days	104,000
Sludge Pump Stations	264HP-1600 hrs.	5,000
TOTAL POWER COST:		$ 2,737,000

CHEMICALS:		
Chlorine @ $0.05/lb		
Dosage 8 mg/l	7,400 Tons/Yr.	$ 740,000
TOTAL ANNUAL O & M COST:		$ 4,603,000

TABLE C-4

Lagoon System - St. Clair County #4

Design Flows	
Average Daily Municipal-Industrial Flow - MGD	12
Maximum Daily Municipal-Industrial Flow - MGD	14.4
Average Annual Storm Flow - BG	12.8
Maximum Annual (25 Yr.) Storm Flow - BG	28.5
Maximum Daily Storm Flow (from storage) - MGD	10.5
Grit Removal & Screening	
Design Flow - MGD	143
Aerated Lagoons	
Design Flow - MGD	140
Average Flow - MGD	42
Number of Lagoons	2
Capacity Per Lagoon - MGD	70
Detention Time - Days	3
Volume Per Lagoon - MG	210
Volume Per Lagoon - Acre-Ft.	644
Land Area Per Lagoon - Acres	43
Total Land Area - Acres	86
Number of Aerators Per Lagoon	32
Total Number of Aerators	64
Water Depth - Ft.	15
Freeboard - Ft.	5
Dike Height - Ft.	20
Storage Lagoons	
Design Flow - MGD	90
Storage Design Period - Days	155
Storage Volume Required - MG	13,950
Number of Lagoons	2
Volume Per Lagoon - MG	6975
Volume Per Lagoon - Acre-Ft.	21,406
Useful Depth - Ft.	20
Freeboard - Ft.	7
Dead Storage - Ft.	3
Dike Height - Ft.	30
Land Area Per Lagoon - Acres	1070
Total Land Area - Acres	2140
Total Land Area - Sq. Miles	3.3
Seepage Control	
Drainage Channel - Miles	7.83
Pump Station Spacing - Miles	4
Drainage Pump Stations	2
Pumping Head - Ft.	38
Observation Well Spacing - Ft.	2000
Number of Well Clusters	21
Sludge Disposal	
Dry Solids Generation - Tons/MG	0.8
Total Dry Solids Generated - Tons/Year	3504
Dry Solids Application Rate - Tons/Acre/Year	10
Sludge Disposal Area - Acres	350
Minimum Sludge Velocity in Pipelines - Ft./Sec.	3.5
Number of Dredge-Plow Systems	1

CAPITAL COST SUMMARY

St. Clair County #4

GRIT REMOVAL & SCREENING:			$ 500,000
AERATED LAGOONS:			
Earthwork	887,000c.y.	$.81/c.y.	$ 718,000
Lining:			
6" Concrete Wave Protection	8,150c.y.	$80/c.y.	652,000
8" Soil Cement	46,900s.y.	$2.33/s.y.	109,000
12" Clay Lining	329,000s.y.	$.68/s.y.	233,000
Roadway-Bituminous	26,640s.y.	$6.50/s.y.	173,000
Flumes	4,374c.y.	$175/c.y.	765,000
Aerators - 150 HP	64 Units	$35,000/Unit	2,240,000
Electrical Equipment		$6,000/Aerator Unit	384,000
Land	86 Ac.	$751/Ac.	65,000
TOTAL:			$ 5,339,000
STORAGE LAGOONS:			
Earthwork	8,545,000c.y.	$.81/c.y.	$ 6,921,000
Lining:			
8" Soil Cement	731,000s.y.	$2.33/s.y.	1,704,000
8" Clay Lining	1,528,000s.y.	$0.45/s.y.	688,000
Roadway-Gravel	1,219,000s.y.	$2.20/s.y.	2,681,000
Interconnecting Structure	1 Unit	$86,500/Unit	86,000
Outlet Structure With Chlorination Facilities	1 Unit	$206,000/Unit	206,000
Chlorination Building	1 Unit	$176,000/Unit	176,000
Land	2,140 Ac.	$751/Ac.	1,607,000
TOTAL STORAGE LAGOON SYSTEM:			$14,069,000
SEEPAGE CONTROL:			
Drainage Channel	526,000c.y.	$.81/c.y.	$ 426,000
Drainage Pump Stations	2 Units	$42,000/Unit	$ 84,000
Observation Wells:			
1-1/4" Casing	2,100 Ft.	$3.50/Ft.	7,000
Development	113 Hr.	$25/Hr.	3,000
Plunger Cylinder	21 Units	$140/Unit	3,000
TOTAL SEEPAGE CONTROL SYSTEM:			$ 523,000
SLUDGE MANAGEMENT:			
Dredge-Plow Systems	1 Unit	$245,000/Unit	$ 245,000
Underdrain System			234,000
Land	350 Ac.	$751/Ac.	263,000
TOTAL SLUDGE MANAGEMENT:			$ 742,000

TOTAL CAPITAL COST

CONSTRUCTION COSTS:	
Grit Removal & Screening	$ 500,000
Aerated Lagoons	5,274,000
Storage Lagoons	12,462,000
Seepage Control	523,000
Sludge Management	479,000
TOTAL:	$19,238,000
Engineering, Administration, Legal & Contingencies	5,771,000
Land	1,935,000
TOTAL CAPITAL COST:	$26,944,000
AMORTIZED CAPITAL COST (5-1/2%, 50 Years) :	$ 1,591,000

AMORTIZED REPLACEMENT COST:

Item	Replacement Period	Capital Cost	Amortized Cost
Grit Removal & Screening:			
Grit & Screening Equipment	25 years	$ 165,000	$ 2,600
Aerated Lagoons:			
Aerators	10 years	2,240,000	164,000
TOTAL:			$ 166,600

OPERATION & MAINTENANCE COSTS

LABOR:	
Grit Removal & Screening	
Annual Man-Hours	9,400
Aerated Lagoons	
Annual Man-Hours	5,200
Storage Lagoons	
Annual Man-Hours	8,000
Seepage Control (1200 Man-Hours/Pump Station)	
Annual Man-Hours	2,400
Sludge Management (1.0 Man-Hour/Ton)	
Annual Man-Hours	3,500
TOTAL ANNUAL MAN-HOURS	28,500
Number of Men Required	14
TOTAL ANNUAL COST ($13,200/Man + 25%):	$ 231,000
MATERIALS & SUPPLIES:	
Grit Removal & Screening (0.1% Cap. Cost)	$ 500
Aerated Lagoons (0.5% Cap. Cost)	26,400
Storage Lagoons (0.1% Cap. Cost)	12,500
Seepage Control (0.5% Cap. Cost)	2,600
Sludge Management:	
Dredge-Plow System (10% Cap. Cost)	24,500
TOTAL ANNUAL MATERIAL & SUPPLY COST:	$ 66,500

POWER: @ $.0125/KWHR

Source	Average Daily HP	Annual Cost
Aerated Lagoons	9,600 HP-365 days	$ 1,051,000
Drainage Pump Stations	640 HP-365 days	70,000
Sludge Management	32 HP-232 hrs.	---
TOTAL POWER COST:		$ 1,121,000

CHEMICALS:		
Chlorine @ $0.05/lb		
Dosage 8 mg/l	1,400 Tons/Yr.	$ 140,000
TOTAL ANNUAL O & M COST:		$ 1,558,500

TABLE C-5

Lagoon System - Monroe County #1

Design Flows	
Average Daily Municipal-Industrial Flow - MGD	268
Maximum Daily Municipal-Industrial Flow - MGD	320
Average Annual Storm Flow - BG	-
Maximum Annual (25 Yr.) Storm Flow - BG	-
Maximum Daily Storm Flow (from storage) - MGD	-
Grit Removal & Screening	
Design Flow - MGD	400
Number of Screening Units	3
Flow Rate Per Unit - MGD	130
Screening Surface Area Per Unit - $Ft.^2$	80
Number of Grit Units	4
Flow Rater Per Unit - MGD	93
Unit Length - Ft.	115
Unit Width - Ft.	18
Unit Water Depth - Ft_3	8
Grit Deposition - $Ft.^3$/MGD	5
Total Deposition Over 50 Yr. - $10^3 Yds.^3$	906
Disposal Area Required - Acres	6.5
Aerated Lagoons	
Design Flow - MGD	320
Average Flow - MGD	268
Number of Lagoons	4
Capacity Per Lagoon - MGD	80
Detention Time - Days	3
Volume Per Lagoon - MG	253
Volume Per Lagoon - Acre-Ft.	775
Land Area Per Lagoon - Acres	57
Total Land Area - Acres	228
Number of Aerators Per Lagoon	36
Total Number of Aerators	144
Water Depth - Ft.	15
Freeboard - Ft.	5
Dike Height - Ft.	20
Storage Lagoons	
Design Flow - MGD	268
Storage Design Period - Days	155
Storage Volume Required - MG	41,540
Number of Lagoons	4
Volume Per Lagoon - MG	10,385
Volume Per Lagoon - Acre-Ft.	31,870
Useful Depth - Ft.	20
Freeboard - Ft.	7
Dead Storage - Ft.	3
Dike Height - Ft.	30
Land Area Per Lagoon - Acres	1600
Total Land Area - Acres	6400
Total Land Area - Sq. Miles	10
Seepage Control	
Drainage Channel - Miles	12.3
Pump Station Spacing - Miles	4
Drainage Pump Stations	3
Pumping Head - Ft.	38
Observation Well Spacing - Ft.	2000
Number of Well Clusters	34
Sludge Disposal	
Dry Solids Generation - Tons/MG	0.8
Total Dry Solids Generated - Tons/Year	78,256
Dry Solids Application Rate - Tons/Acre/Year	10
Sludge Disposal Area - Sq. Miles	12.2
Minimum Sludge Velocity in Pipelines - Ft./Sec.	3.5
Number of Dredge-Plow Systems	2

CAPITAL COST SUMMARY

Monroe County #1

GRIT REMOVAL:			
Grit Chambers	4 Units	$70,050/Unit	$ 280,000
Grit Removal Equipment	4 Units	$13,000/Unit	52,000
Grit Loading Equipment	1 Unit	$40,000/Unit	40,000
SCREENING:			
Structure	3 Units	$52,800/Unit	1,584,000
Equipment	3 Units	$40,000/Unit	120,000
TOTAL GRIT REMOVAL & SCREENING:			$ 2,076,000
AERATED LAGOONS:			
Earthwork	1,750,000c.y.	$.81/c.y.	$ 1,418,000
Lining:			
6" Concrete Wave Protection	18,800c.y.	$80/c.y.	1,501,000
8" Soil Cement	108,000s.y.	$2.33/s.y.	252,000
12" Clay Lining	871,000s.y.	$2.00/s.y.	1,742,000
Roadway-Bituminous	52,490s.y.	$6.50/s.y.	341,000
Flumes	6,884c.y.	$175/c.y.	1,205,000
Aerators - 150 HP	144 Units	$35,000/Unit	5,040,000
Electrical Equipment		$6,000/Aerator Unit	864,000
Land	228 Ac.	$1,358/Ac.	310,000
TOTAL:			$12,673,000
STORAGE LAGOONS:			
Earthwork	17,911,000c.y.	$.81/c.y.	$14,508,000
Lining:			
8" Soil Cement	1,788,000s.y.	$2.33/s.y.	4,167,000
8" Clay Lining	2,491,000s.y.	$2.00/s.y.	4,982,000
Roadway-Gravel	255,000s.y.	$2.20/s.y.	562,000
Interconnecting Structures	4 Units	$86,500/Unit	$ 346,000
Outlet Structure with Chlorination Facilities	2 Units	$291,400/Unit	583,000
Chlorination Building	1 Unit	$250,000/Unit	250,000
Land	6,400 Ac.	$1,358/Ac.	8,691,000
TOTAL STORAGE LAGOON SYSTEM:			$34,089,000
SEEPAGE CONTROL:			
Drainage Channel	847,000c.y.	$.81/c.y.	$ 686,000
Drainage Pump Stations	3 Units	$42,000/Unit	126,000
Observation Wells:			
1-1/4" Casing	3,400 Ft.	$3.50/Ft.	12,000
Development	184 Hr.	$25/Hr.	5,000
Plunger Cylinder	34 Units	$140/Unit	5,000
TOTAL SEEPAGE CONTROL SYSTEM:			$ 834,000
SLUDGE MANAGEMENT:			
Dredge-Plow Systems	2 Units	$371,800/Unit	$ 744,000
Distribution Piping:			
16" Pipe	66,500 LF	$24/LF	1,597,000
Fittings (10° Pipe Cost)			160,000
Pump Stations	109 HP	$250/HP	27,000
Underdrain System	12.2 Sq. Mi.	$408,000/Sq.Mi.	4,978,000
Land	7,826 Ac.	$1,358/Ac.	10,628,000
TOTAL SLUDGE MANAGEMENT:			$18,134,000

TOTAL CAPITAL COST

CONSTRUCTION COSTS:	
Grit Removal & Screening	$ 2,076,000
Aerated Lagoons	12,363,000
Storage Lagoons	25,398,000
Seepage Control	834,000
Sludge Management	7,506,000
TOTAL:	$48,177,000
Engineering, Administration, Legal & Contingencies	$14,453,000
Land	19,629,000
TOTAL CAPITAL COST:	$82,259,000
AMORTIZED CAPITAL COST (5-1/2%, 50 Years) :	$ 4,858,000

AMORTIZED REPLACEMENT COST:

Item	Replacement Period	Capital Cost	Amortized Cost
Grit Removal & Screening:			
Grit & Screening Equipment	25 years	$ 212,000	$ 3,300
Aerated Lagoons:			
Aerators	10 years	5,040,000	369,100
Sludge Management:			
Header Pipe & Pump Station	25 years	1,784,000	27,600
TOTAL:			$ 400,000

OPERATION & MAINTENANCE COSTS

LABOR:	
Grit Removal & Screening	
Annual Man-Hours	46,500
Aerated Lagoons	
Annual Man-Hours	7,400
Storage Lagoons	
Annual Man-Hours	19,200
Seepage Control (1200 Man-Hours/Pump Station)	
Annual Man-Hours	3,600
Sludge Management (0.75 Man-Hour/Ton)	
Annual Man-Hours	58,700
TOTAL ANNUAL MAN-HOURS:	135,400
Number of Men Required	65
TOTAL ANNUAL COST ($13,200/Man + 25%)	$ 1,072,500
MATERIALS & SUPPLIES:	
Grit Removal & Screening (0.1% Cap. Cost)	$ 2,000
Aerated Lagoons (0.5% Cap. Cost)	62,000
Storage Lagoons (0.1% Cap. Cost)	25,000
Seepage Control (0.5% Cap. Cost)	4,000
Sludge Management:	
Dredge-Plow System (10% Cap. Cost)	74,000
Distribution System (5% Cap. Cost)	89,000
TOTAL ANNUAL MATERIAL & SUPPLY COST:	$ 256,000

POWER: @ $.0125/KWHR

Source	Average Daily HP	Annual Cost
Aerated Lagoons	21,600HP-365 days	$ 2,365,000
Drainage Pump Stations	950HP-365 days	104,000
Sludge Pump Stations	173HP-1600 hrs.	4,000
TOTAL POWER COST:		$ 2,473,000

CHEMICALS:		
Chlorine @ $0.05/lb		
Dosage 8 mg/l	3,260 Tons/Yr.	$ 326,000
TOTAL ANNUAL O & M COST:		$ 4,128,000

TABLE C-6

Lagoon System - Monroe County #2

Design Flows	
Average Daily Mun-Ind. Flow - MGD	225
Maximum Daily Mun-Ind. Flow - MGD	270
Average Annual Storm Flow - BG	--
Maximum Annual (25 Yr.) Storm Flow - BG	--
Maximum Daily Storm Flow (From Storage) - MGD	--
Grit Removal & Screening	
Design Flow - MGD	338
Number of Screening Units	3
Flow Rate Per Unit - MGD	130
Screening Surface Area Per Unit - Ft^2	80
Number of Grit Units	4
Flow Rate Per Unit - MGD	93
Unit Length - Ft.	115
Unit Width - Ft.	18
Unit Water Depth - Ft_3	8
Grit Deposition - $Ft.^3/MGD$	5
Total Deposition over 50 Yr. - $10^3 Yds^3$	706
Disposal Area Required - Acres	5
Aerated Lagoons	
Design Flow - MGD	270
Average Flow - MGD	225
Number of Lagoons	4
Capacity Per Lagoon - MGD	67.5
Detention Time - Days	3
Volume Per Lagoon - MG	203
Volume Per Lagoon - Acre-Ft.	623
Land Area Per Lagoon - Acres	41.5
Total Land Area - Acres	166
Number of Aerators Per Lagoon	30
Total Number of Aerators	120
Water Depth - Ft.	15
Freeboard - Ft.	5
Dike Height - Ft.	20
Storage Lagoons	
Design Flow - MGD	225
Storage Design Period - Days	155
Storage Volume Required - MG	34,875
Number of Lagoons	3
Volume Per Lagoon - MG	11,625
Volume Per Lagoon - Acre-Ft.	35,676
Useful Depth - Ft.	20
Freeboard - Ft.	7
Dead Storage - Ft.	3
Dike Height - Ft.	30
Land Area Per Lagoon - Acres	1,784
Total Land Area - Acres	5,352
Total Land Area - Sq. Miles	8.4
Seepage Control	
Drainage Channel - Miles	13.4
Pump Station Spacing - Miles	4
Drainage Pump Stations	4
Pumping Head - Ft.	38
Observation Well Spacing - Ft.	2,000
Number of Well Clusters	35
Sludge Disposal	
Dry Solids Generation - Tons/MG	0.8
Total Dry Solids Generated - Tons/Year	65,700
Dry Solids Application Rate - Tons/Acre/Year	10
Sludge Disposal Area - Sq. Miles	10.3
Minimum Sludge Velocity in Pipelines - Ft./Sec	3.5
Number of Dredge-Plow Systems	2

CAPITAL COST SUMMARY

Monroe County #2

GRIT REMOVAL:			
Grit Chambers	4 Units	$70,050/Unit	$ 280,000
Grit Removal Equipment	4 Units	$13,000/Unit	52,000
Grit Loading Equipment	1 Unit	$40,000/Unit	40,000
SCREENING:			
Structure	3 Units	$52,000/Unit	156,000
Equipment	3 Units	$40,000/Unit	120,000
TOTAL GRIT REMOVAL & SCREENING:			$ 648,000
AERATED LAGOONS:			
Earthwork	1,492,000c.y.	$.81/c.y.	$ 1,209,000
Lining:			
6" Concrete Wave Protection	16,000c.y.	$80/c.y.	1,280,000
8" Soil Cement	92,000s.y.	$2.33/s.y.	214,000
12" Clay Lining	634,000s.y.	$2.00/s.y.	1,268,000
Roadway-Bituminous	44,800s.y.	$6.50/s.y.	291,000
Flumes	17,500c.y.	$175/c.y.	3,062,000
Aerators - 150 HP	120 Units	$35,000/Unit	4,200,000
Electrical Equipment		$6,000/Aerator Unit	720,000
Land	166 Ac.	$1,358/Ac.	225,000
TOTAL:			$12,469,000
STORAGE LAGOONS:			
Earthwork	15,761,000c.y.	$.81/c.y.	$12,767,000
Lining:			
8" Soil Cement	1,416,000s.y.	$2.33/s.y.	3,300,000
8" Clay Lining	2,630,000s.y.	$2.00/s.y.	5,260,000
Roadway-Gravel	225,000s.y.	$2.20/s.y.	495,000
Interconnecting Structures	2 Units	$86,500/Unit	$ 173,000
Outlet Structure with Chlorination Facilities	2 Units	$245,000/Unit	490,000
Chlorination Building	1 Unit	$250,000/Unit	250,000
Land	5,352 Ac.	$1,358/Ac.	7,268,000
TOTAL STORAGE LAGOON SYSTEM:			$30,003,000
SEEPAGE CONTROL:			
Drainage Channel	900,000c.y.	$.81/c.y.	$ 729,000
Drainage Pump Stations	4 Units	$42,000/Unit	168,000
Observation Wells:			
1-1/4" Casing	3,500 Ft.	$3.50/Ft.	12,000
Development	189 Hr.	$25/Hr.	5,000
Plunger Cylinder	35 Units	$140/Unit	5,000
TOTAL SEEPAGE CONTROL SYSTEM:			$ 919,000
SLUDGE MANAGEMENT:			
Dredge-Plow Systems	2 Units	$313,000/Unit	$ 626,000
Distribution Piping:			
12" Pipe	44,000 LF	$20/LF	880,000
18" Pipe	10,000 LF	$27/LF	270,000
Fittings (10° Piping Cost)			115,000
Pump Stations	224 HP	$250/HP	56,000
Underdrain System	10.2 Sq. Mi.	$408,000/Sq.Mi.	4,162,000
Land	6,570 Ac.	$1,358/Ac.	8,922,000
TOTAL SLUDGE MANAGEMENT:			$15,031,000

TOTAL CAPITAL COST

CONSTRUCTION COSTS:	
Grit Removal & Screening	$ 648,000
Aerated Lagoons	12,244,000
Storage Lagoons	22,735,000
Seepage Control	919,000
Sludge Management	6,109,000
TOTAL:	$42,665,000
Engineering, Administration, Legal & Contingencies	12,796,000
Land	16,415,000
TOTAL CAPITAL COST:	$71,876,000
AMORTIZED CAPITAL COST (5-1/2%, 50 Years) :	$ 4,245,000

AMORTIZED REPLACEMENT COST:

Item	Replacement Period	Capital Cost	Amortized Cost
Grit Removal & Screening:			
Grit & Screening Equipment	25 years	$ 212,000	$ 3,300
Aerated Lagoons:			
Aerators	10 years	4,200,000	307,600
Sludge Management:			
Header Pipe & Pump Station	25 years	1,321,000	20,500
TOTAL:			$ 331,400

OPERATION & MAINTENANCE COSTS

LABOR:	
Grit Removal & Screening	
Annual Man-Hours	40,000
Aerated Lagoons	
Annual Man-Hours	6,500
Storage Lagoons	
Annual Man-Hours	17,000
Seepage Control (1200 Man-Hours/Pump Station)	
Annual Man-Hours	4,800
Sludge Management	
Annual Man-Hours	49,300
TOTAL ANNUAL MAN-HOURS:	117,600
Number of Men Required	57
TOTAL ANNUAL COST ($13,200/Man + 25%)	$ 940,000
MATERIALS & SUPPLIES:	
Grit Removal & Screening (0.1% Cap. Cost)	$ 600
Aerated Lagoons (0.5% Cap. Cost)	61,200
Storage Lagoons (0.1% Cap. Cost)	22,700
Seepage Control (0.5% Cap. Cost)	4,600
Sludge Management:	
Dredge-Plow System (10% Cap. Cost)	62,600
Distribution System (5% Cap. Cost)	60,300
TOTAL ANNUAL MATERIAL & SUPPLY COST:	$ 212,000

POWER: @ $.0125/KWHR

Source	Average Daily HP	Annual Cost
Aerated Lagoons	18,000Hp-365 days	$ 1,971,000
Drainage Pump Stations	1,270HP-365 days	139,000
Sludge Pump Stations	288HP-1600 hrs.	6,000
TOTAL POWER COST:		$ 2,116,000

CHEMICALS:		
Chlorine @ $0.05/lb		
Dosage 8 mg/l	7,500 Tons/Yr.	$ 750,000
TOTAL ANNUAL O & M COST:		$ 4,018,000

TABLE C-7

Lagoon System - Lenawee County

Design Flows	
Average Daily Mun-Ind. Flow - MGD	12
Maximum Daily Mun-Ind. Flow - MGD	14.4
Average Annual Storm Flow - BG	1.06
Maximum Annual (25 Yr.) Storm Flow - BG	2.41
Maximum Daily Storm Flow (From Storage) - MGD	10.5
Grit Removal & Screening	
Design Flow - MGD	28
Aerated Lagoons	
Design Flow - MGD	22.5
Average Flow - MGD	14.9
Number of Lagoons	2
Capacity Per Lagoon - MGD	12
Detention Time - Days	3
Volume Per Lagoon - MG	43
Volume Per Lagoon - Acre-Ft.	110
Land Area Per Lagoon - Acres	7.5
Total Land Area - Acres	15
Number of Aerators Per Lagoon	5
Total Number of Aerators	10
Water Depth - Ft.	15
Freeboard - Ft.	5
Dike Height - Ft.	20
Storage Lagoons	
Design Flow - MGD	18.6
Storage Design Period - Days	155
Storage Volume Required - MG	2,883
Number of Lagoons	2
Volume Per Lagoon - MG	1,442
Volume Per Lagoon - Acre-Ft.	4,425
Useful Depth - Ft.	20
Freeboard - Ft.	7
Dead Storage - Ft.	3
Dike Height - Ft.	30
Land Area Per Lagoon - Acres	225
Total Land Area - Acres	450
Seepage Control	
Drainage Channel - Miles	3.63
Pump Station Spacing - Miles	4
Drainage Pump Stations	1
Pumping Head - Ft.	38
Observation Well Spacing - Ft.	2,000
Number of Well Clusters	10
Sludge Disposal	
Dry Solids Generation - Tons/MG	0.8
Total Dry Solids Generated - Tons/Year	3,504
Dry Solids Application Rate - Tons/Acre/Year	10
Sludge Disposal Area - Acres	350
Minimum Sludge Velocity in Pipelines - Ft./Sec	3.5
Number of Dredge-Plow Systems	1

CAPITAL COST SUMMARY

Lenawee County

GRIT REMOVAL & SCREENING:			$ 175,000
AERATED LAGOONS:			
Earthwork	352,000c.y.	$.81/c.y.	$ 285,000
Lining:			
6" Concrete Wave Protection	4,280c.y.	$80/c.y.	342,000
8" Soil Cement	26,840s.y.	$2.33/s.y.	62,500
12" Clay Lining	206,700s.y.	$2.00/s.y.	413,400
Roadway-Bituminous	10,560s.y.	$6.50/s.y.	68,600
Flumes	1,900s.y.	$175/s.y.	332,500
Aerators - 150 HP	10 Units	$35,000/Unit	350,000
Electrical Equipment		$6,000/Aerator Unit	60,000
Land	18 Ac.	$1,358/Ac.	24,400
TOTAL:			$ 1,938,400
STORAGE LAGOONS:			
Earthwork	3,918,000c.y.	$.81/c.y.	$ 3,173,000
Lining:			
8" Soil Cement	335,000s.y.	$2.33/s.y.	781,000
8" Clay Lining	700,000s.y.	$2.00/s.y.	1,400,000
Roadway-Gravel	293,000s.y.	$2.20/s.y.	645,000
Interconnecting Structures	1 Unit	$86,500/Unit	86,500
Outlet Structure with Chlorination Facilities	1 Unit	$73,200/Unit	73,200
Chlorination Building	1 Unit	$62,800/Unit	62,800
Land	450 Ac.	$1,358/Ac.	611,000
TOTAL STORAGE LAGOON SYSTEM:			$ 7,233,000
SEEPAGE CONTROL:			
Drainage Channel	243,900c.y.	$.81/c.y.	$ 198,000
Drainage Pump Stations	1 Unit	$42,000/Unit	42,000
Observation Wells:			
1-1/4" Casing	1,000 Ft.	$3.50/Ft.	3,500
Development	54 Hrs.	$25/Hr.	1,400
Plunger Cylinder	10 Units	$140/Unit	1,400
TOTAL SEEPAGE CONTROL SYSTEM:			$ 246,300
SLUDGE MANAGEMENT:			
Dredge-Plow Systems	1 Unit	$245,000/Unit	$ 245,000
Underdrain System			234,000
Land	350 Ac.	$1,358/Ac.	475,000
TOTAL SLUDGE MANAGEMENT:			$ 945,000

TOTAL CAPITAL COST

CONSTRUCTION COSTS:	
Grit Removal & Screening	$ 175,000
Aerated Lagoons	1,914,000
Storage Lagoons	6,622,000
Seepage Control	246,000
Sludge Management	479,000
TOTAL:	$ 9,436,000
Engineering, Administration, Legal & Contingencies	2,831,000
Land	1,110,000
TOTAL CAPITAL COST:	$13,377,000
AMORTIZED CAPITAL COST (5-1/2%, 50 Years) :	$ 790,000

AMORTIZED REPLACEMENT COST:

Item	Replacement Period	Capital Cost	Amortized Cost
Grit Removal & Screening:			
Grit & Screening Equipment	25 years	$ 52,500	$ 800
Aerated Lagoons:			
Aerators	10 years	350,000	25,600
TOTAL:			$ 26,400

OPERATION & MAINTENANCE COSTS

LABOR:	
Grit Removal & Screening	
Annual Man-Hours	5,550
Aerated Lagoons	
Annual Man-Hours	2,150
Storage Lagoons	
Annual Man-Hours	350
Seepage Control (1200 Man-Hours/Pump Station)	
Annual Man-Hours	1,200
Sludge Management	
Annual Man-Hours	3,500
TOTAL ANNUAL MAN-HOURS:	12,750
Number of Men Required	6
TOTAL ANNUAL COST ($13,200/Man + 25%)	$ 99,000
MATERIALS & SUPPLIES:	
Grit Removal & Screening (0.1% Cap. Cost)	$ 200
Aerated Lagoons (0.5% Cap. Cost)	9,600
Storage Lagoons (0.1% Cap. Cost)	6,600
Seepage Control (0.5% Cap. Cost)	1,200
Sludge Management:	
Dredge-Plow System (10% Cap. Cost)	24,500
TOTAL ANNUAL MATERIAL & SUPPLY COST:	$ 42,100

POWER: @ $.0125/KWHR

Source	Average Daily HP	Annual Cost
Aerated Lagoons	1,500 HP-365 days	$ 164,000
Drainage Pump Stations	320 HP-365 days	35,000
Sludge Management	32 HP-232 hrs.	---
TOTAL POWER COST:		$ 199,000

CHEMICALS:		
Chlorine @ $0.05/lb		
Dosage 8 mg/l	181 Tons/Yr.	$ 18,100
TOTAL ANNUAL O & M COST:		$ 358,200

TABLE D-1

Huron-Tuscola County Irrigation System Design #1

Total System Design Flows

Average Daily Municipal-Industrial Wastewater Flow: 1139 MGD
Maximum Annual Storm Flow: 493,000 MG
Average Annual Storm Flow: 220,800 MG

Maximum Annual Flow: 908,700 MG
Maximum Equivalent Daily Flow: 2490 MGD

Average Annual Flow: 636,500 MG
Average Equivalent Daily Flow: 1745 MGD

The St. Clair-Sanilac County Irrigation Site would be fully utilized due to its proximity. That site is designed for an equivalent daily flow of 681 MGD.

Design Flows for Huron-Tuscola Site:

Maximum Equivalent Daily Flow: 1809 MGD
Average Equivalent Daily Flow: 1064 MGD

Design Flow for Huron-Tuscola Land Site: 1832 MGD

Cost Estimate

Capital Cost (Ratio 1809/1832) $881,444,000	
Amortized Capital Cost (50 years at 5-1/2%)	$52,059,000
Operation & Maintenance Cost	
Unadjusted Total O & M Cost:	$37,933,000
Unadjusted Power Cost	$15,101,000
Adjusted Power Cost (Ratio 1064/1832)	$ 8,770,000
Unadjusted Fixed Cost	$22,832,000
Adjusted Fixed Cost (Ratio 1309/1832)	$22,125,000
Total Annual Cost	$82,954,000

Power Requirements
Average: 239.7 MW
Maximum: 479.4 MW

Manpower	Number of Men
Superintendents & Supervisors	15
Foremen	60
Operators	193
Electricians	59
Maintenance Mechanics	59
Laboratory Technicians	24
Laborers	210
Others	5
Total Manpower	625

TABLE D-2

Huron-Tuscola County Irrigation System Design #2

Total System Design Flows:

Average Daily M & I Flow: 1139 MGD
Maximum Annual Storm Flow: 28,500 MG
Average Annual Storm Flow: 12,800 MG

Maximum Annual Flow: 444,000 MG
Maximum Equivalent Daily Flow: 1217 MGD

Average Annual Flow: 428,500 MG
Average Equivalent Flow: 1174 MGD

The St. Clair County Irrigation Site would be fully utilized due to its proximity to the wastewater lagoons. The site is designed for an equivalent daily flow of 681 MGD.

Design Flows for Huron-Tuscola Site:

Maximum Equivalent Daily Flow: 536 MGD
Average Equivalent Daily Flow: 493 MGD

Cost Estimate:

Capital Cost (Ratio 536/1832)	$261,170,000
Amortized Capital Cost (50 years at 5-1/2%)	$15,425,000
Annual O & M Cost:	
Unadjusted Total O & M Cost:	$37,933,000
Unadjusted Power Cost:	$15,101,000
Adjusted Power Cost (Ratio 493/1832)	$ 4,065,000
Unadjusted Fixed Cost:	$22,832,000
Adjusted Fixed Cost (Ratio 536/1832)	$ 6,680,000
Total Adjusted O & M Cost	$10,745,000

Total Annual Cost: $26,170,000

Power Requirements:

Average: 64.5 mw
Maximum: 129.0 mw

Land Required:

Manpower	Number of Men
Superintendents & Supervisors	4
Foremen	13
Operators	58
Electricians	18
Maintenance Mechanics	18
Laboratory Technicians	11
Laborers	68
Other	2
Total Manpower	187

TABLE D-3

St. Clair County Irrigation System Design #1

System Design Flows:

Average Daily M & I Flow: 12 MGD
Maximum Annual Storm Flow: 28,500 MG
Average Annual Storm Flow: 12,800 MG

Maximum Annual Flow: 32,900 MG
Maximum Equivalent Daily Flow: 90 MGD

Average Annual Flow: 17,200 MG
Average Equivalent Daily Flow: 47 MGD

Cost Estimate:

Capital Cost (Ratio 90/681) $43,380,000

Amortized Capital Cost (50 years at 5-1/2%) $2,562,000

Annual O & M Cost:

Unadjusted Total O & M Cost:	$14,215,000
Unadjusted Power Cost:	$ 5,345,000
Adjusted Power Cost (Ratio 47/681)	$ 386,000
Unadjusted Fixed Cost	$ 8,870,000
Adjusted Fixed Cost (Ratio 90/681)	$ 1,139,000
Total Adjusted O & M Cost	$ 1,525,000

Total Annual Cost $4,087,000

Power Requirements:

Average: 6.13 MW
Maximum: 17.60 MW

Manpower:	Number of Men
Superintendents & Supervisors	1
Foremen	3
Operators	10
Electricians	3
Maintenance Mechanics	3
Laboratory Technicians	2
Laborers	10
Other	--
Total Manpower	32

Land Required: 19,720 AC = 30.8 Sq. Mi.

TABLE D-4

Lenawee County Irrigation System Design #1

System Design Flows:

Average Daily M & I Flow: 12 MGD
Maximum Annual Storm Flow: 2410 MG
Average Annual Storm Flow: 1060 MG

Maximum Annual Flow: 6790 MG
Maximum Equivalent Daily Flow: 18.6 MGD

Average Annual Flow: 4440 MG
Average Equivalent Daily Flow: 14.9 MGD

Cost Estimate:

Capital Cost (Ratio 18.6/86.0) $10,000,000

Amortized Capital Cost (50 years at 5-1/2%): $591,000

Annual O & M Cost:

Unadjusted Total O & M Cost:	$1,721,000
Unadjusted Power Cost:	$ 650,000
Adjusted Power Cost (Ratio 14.7/86.0):	$ 113,000
Unadjusted Fixed Cost:	$1,071,000
Adjusted Fixed Cost: (Ratio 18.6/86.0):	$ 232,000
Total Adjusted O & M Cost	$ 345,000

Total Annual Cost: $936,000

Power Requirements

Average: 1.79 MW
Maximum: 3.35 MW

Manpower:	Number of Men
Superintendents & Supervisors	.5
Foremen	-
Operators	2
Electricians	1
Maintenance Mechanics	1
Laboratory Technicians	.5
Laborers	2
Other	-
Total Manpower	7

Land Required: 3960 Acres = 6.2 Sq. Mi.

TABLE D-5

St. Clair County Irrigation System Design #2

System Design Flows:

Average Daily M & I Flow: 187 MGD
Maximum Annual Storm Flow: 28,500 MG
Average Annual Storm Flow: 12,800 MG

Maximum Annual Flow: 96,800 MG
Maximum Equivalent Daily Flow: 265 MGD

Average Annual Flow: 81,100 MG
Average Equivalent Daily Flow: 222 MGD

Cost Estimate

Capital Cost (Ratio 265/681): $127,680,000

Amortized Capital Cost (50 years at 5-1/2 %): $7,541,000

Annual O & M Cost:

Unadjusted Total O & M Cost:	$14,215,000
Unadjusted Power Cost:	$ 5,345,000
Adjusted Power Cost (Ratio 222/681):	$ 1,742,000
Unadjusted Fixed Cost:	$ 8,870,000
Adjusted Fixed Cost (Ratio 265/681)	$ 3,436,000
Total Adjusted O & M Cost	$ 5,178,000

Total Annual Cost: $12,719,000

Power Requirements:

Average: 16.7
Maximum: 29.8

Manpower	Number of Men
Superintendents & Supervisors	2
Foremen	9
Operators	30
Electricians	9
Maintenance Mechanics	9
Laboratory Technicians	5
Laborers	30
Other	1
Total Manpower	95

Land Required: 58,066 Acres = 907 Sq. Mi.

TABLE D-6

Lenawee County Irrigation System Design #2

System Design Flows:

Average Daily M & I Flow: 36 MGD
Maximum Annual Storm Flow (25 year): 2,401 MG
Average Annual Storm Flow: 1,060 MG

Maximum Annual Flow: 15,541 MG
Maximum Equivalent Daily Flow: 42.6 MGD

Average Annual Flow: 14,200 MG
Average Equivalent Daily Flow: 38.9 MGD

Cost Estimate

Capital Cost (Ratio 42.6/86): $22,890,000

Amortized Capital Cost (50 years at 5-1/2%): $1,352,000

Annual O & M Cost:

Unadjusted O & M Cost:	$1,721,000
Unadjusted Power Cost:	$ 650,000
Adjusted Power Cost (Ratio 38.9/86):	$ 216,000
Unadjusted Fixed Cost:	$1,071,000
Adjusted Fixed Cost (Ratio 42.6/86):	$ 530,000
Total Adjusted O & M Cost:	$ 764,000

Total Annual Cost: $2,116,000

Power Requirements:

Average: 3.7 MW
Maximum: 7.7 MW

Manpower	Number of Men
Superintendents & Supervisors	.5
Foremen	2
Operators	4
Electricians	1
Maintenance Mechanics	2
Laboratory Technicians	.5
Laborers	5
Others	-
Total Manpower	15

Land Requirements: 9065 Acres = 14.2 Sq. Mi.

DESIGN AND COST INFORMATION FOR TRANSMISSION SYSTEMS

TABLE E-1

TRANSMISSION SYSTEMS ANNUAL COSTS

From the Bauer Report, the following sequence was used for calculating total capital, operation, maintenance and major replacement costs.

TOTAL CAPITAL COST:

Estimated Capital Cost + 10% Engineering + 5% Administration + 10% Contingencies.

ANNUAL CAPITAL COST:

@ 5-1/2%, 50 Years	Total Capital Cost x	.05906
@ 7%, 50 Years	Total Capital Cost x	.07246
@ 10%, 50 Years	Total Capital Cost x	.10086

ANNUAL REPLACEMENT COST (PUMP STATIONS):

@ 5-1/2%	Capital Cost (.01408)	
@ 7%	Capital Cost (.01316)	See p. A-10 Bauer Report
@ 10%	Capital Cost (.01114)	

ANNUAL O&M COST:

Power - Annual Cost = (Pump Head Ft.)(Avg. Flow MGD)(19.093)
based on $.0125/kwh and .75 pump efficiency

Labor - Total Capital Cost x .0025

Materials - Total Capital Cost x .00125

The following cost summaries are for the conveyance systems required in the land irrigation treatment options using private land. These systems are described in the following section along with detailed design information.

I

CAPITAL COSTS:	
Tunnel, Drop Shafts, Etc.	$128,000,000
Pump Station	77,300,000
SUBTOTAL:	$205,300,000
Engineering, Administration & Contingency	51,300,000
TOTAL CAPITAL COST:	$256,600,000
ANNUAL CAPITAL COST:	
5-1/2%	$ 15,155,000
7%	18,593,000
10%	25,881,000
ANNUAL REPLACEMENT COST:	
5-1/2%	1,089,000
7%	1,018,000
10%	861,000
ANNUAL O&M COST:	
Power (Average Flow 1147 MGD)	11,848,000
Labor	642,000
Materials	321,000
TOTAL:	$ 12,811,000
TOTAL ANNUAL COST:	
5-1/2%	$ 29,055,000
7%	32,422,000
10%	39,553,000

II

CAPITAL COST:	
Force Main	$ 63,400,000
Pump Stations	25,600,000
SUBTOTAL:	$ 89,000,000
Engineering, Administration & Contingency	22,200,000
TOTAL:	$111,200,000
ANNUAL CAPITAL COST:	
5-1/2%	$ 6,568,000
7%	8,058,000
10%	11,216,000
ANNUAL REPLACEMENT COST:	
5-1/2%	360,000
7%	337,000
10%	285,000
ANNUAL O&M COST:	
Power	1,264,000
Labor	278,000
Materials	139,000
TOTAL:	$ 1,681,000
TOTAL ANNUAL COST	
5-1/2%	$ 8,609,000
7%	10,076,000
10%	13,182,000

III

CAPITAL COST:	
Gravity Sewer	$35,520,000
Pump Stations	5,145,000
SUBTOTAL:	$40,665,000
Engineering, Administration & Contingency	10,166,000
TOTAL CAPITAL COST:	$50,831,000
ANNUAL CAPITAL COST:	
5-1/2%	$ 3,002,000
7%	3,683,000
10%	5,127,000
ANNUAL REPLACEMENT COST:	
5-1/2%	72,000
7%	68,000
10%	57,000
ANNUAL O&M COST:	
Power (109 MGD)	99,000
Labor	127,000
Materials	63,000
TOTAL O&M COST:	$ 190,000
TOTAL ANNUAL COST:	
5-1/2%	$ 3,264,000
7%	3,941,000
10%	5,374,000

CAPITAL COST:	
Tunnel, Drop Shafts, Etc.	$29,940,000
Pump Station	9,400,000
SUBTOTAL:	$39,340,000
Engineering, Administration & Contingency	9,835,000
TOTAL CAPITAL COST:	$49,175,000
ANNUAL CAPITAL COST:	
5-1/2%	$ 2,904,000
7%	3,563,000
10%	4,960,000
ANNUAL REPLACEMENT COST:	
5-1/2%	132,000
7%	124,000
10%	105,000
ANNUAL O&M COST:	
Power (140.5 MGD, 214' Head)	574,000
Labor	123,000
Materials	61,000
TOTAL O&M COST:	$ 758,000
TOTAL ANNUAL COST:	
5-1/2%	$ 3,794,000
7%	4,445,000
10%	5,823,000

CAPITAL COSTS:	
Force Main	$36,960,000
Pump Station	13,180,000
SUBTOTAL:	$50,140,000
Engineering, Administration & Contingency	12,540,000
TOTAL:	62,680,000
ANNUAL CAPITAL COST:	
5-1/2%	$ 3,702,000
7%	4,542,000
10%	6,322,000
ANNUAL REPLACEMENT:	
5-1/2%	186,000
7%	173,000
10%	147,000
ANNUAL O&M COST:	
Power (average Flow 365.5)	928,000
Labor	157,000
Materials	78,000
TOTAL O&M COST:	$ 1,163,000
TOTAL ANNUAL COST:	
5-1/2%	$ 5,051,000
7%	5,878,000
10%	7,632,000

CAPITAL COST:	
Force Main	$16,630,000
Pump Station	4,700,000
SUBTOTAL:	$21,330,000
Engineering, Administration & Contingency	5,330,000
TOTAL CAPITAL COST:	$26,660,000
ANNUAL CAPITAL COST:	
5-1/2%	$ 1,575,000
7%	1,932,000
10%	2,689,000
ANNUAL REPLACEMENT COST	
5-1/2%	66,000
7%	62,000
10%	52,000
ANNUAL O&M COST:	
Power (Average Flow 136 MGD)	288,000
Labor	67,000
Materials	33,000
TOTAL O&M COST:	$ 388,000
TOTAL ANNUAL COST:	
5-1/2%	$ 2,029,000
7%	2,382,000
10%	3,129,000

VII

CAPITAL COST:	
Gravity Sewer	**$36,370,000**
Engineering, Administration & Contingency	**9,090,000**
TOTAL CAPITAL COST:	$45,460,000
ANNUAL CAPITAL COST:	
5-1/2%	$ 2,685,000
7%	3,294,000
10%	4,585,000
ANNUAL REPLACEMENT COST:	-0-
ANNUAL O&M COST:	
Power	-0-
Materials	57,000
Labor	114,000
TOTAL O&M COST:	$ 171,000
TOTAL ANNUAL COST:	
5-1/2%	$ 2,856,000
7%	3,465,000
10%	4,756,000

VIII

CAPITAL COST:	
Force Main	$15,500,000
Pump Station	4,700,000
SUBTOTAL:	$20,200,000
Engineering, Administration & Contingency	5,050,000
TOTAL CAPITAL COST:	$25,250,000
ANNUAL CAPITAL COST:	
5-1/2%	$ 1,491,000
7%	1,830,000
10%	2,547,000
REPLACEMENT COST:	
5-1/2%	66,000
7%	62,000
10%	52,000
ANNUAL O&M COST:	
Power (136 MGD)	101,000
Materials	32,000
Labor	63,000
TOTAL O&M COST:	$ 196,000
TOTAL ANNUAL COST:	
5-1/2%	$ 1,753,000
7%	2,088,000
10%	2,795,000

IX

CAPITAL COST:	
Gravity Sewer	$25,700,000
Engineering, Administration & Contingency	6,420,000
TOTAL CAPITAL COST:	$32,120,000
ANNUAL CAPITAL COST:	
5-1/2%	$ 1,897,000
7%	2,327,000
10%	3,240,000
REPLACEMENT COST:	-0-
ANNUAL O&M COST:	
Power	-0-
Labor	80,000
Materials	40,000
TOTAL O&M COST:	$ 120,000
TOTAL ANNUAL COST:	
5-1/2%	$ 2,017,000
7%	2,447,000
10%	3,360,000

X

CAPITAL COST:	
Force Main	$ 56,200,000
Pump Stations	25,600,000
SUBTOTAL:	$ 81,800,000
Engineering, Administration & Contingency	20,450,000
TOTAL CAPITAL COST:	$102,250,000
ANNUAL CAPITAL COST:	
5-1/2%	$ 6,039,000
7%	7,409,000
10%	10,313,000
REPLACEMENT COST:	
5-1/2%	360,000
7%	337,000
10%	285,000
ANNUAL O&M COST	
Power	4,639,000
Labor	256,000
Materials	128,000
TOTAL O&M COST:	$ 5,023,000
TOTAL ANNUAL COST:	
5-1/2%	$ 11,422,000
7%	12,769,000
10%	15,621,000

XI

CAPITAL COST:	
Tunnel, Drop Shafts, Etc.	$ 98,300,000
Pump Station	52,600,000
SUBTOTAL:	$150,900,000
Engineering, Administration & Contingency	37,700,000
TOTAL CAPITAL COST:	$188,600,000
ANNUAL CAPITAL COST:	
5-1/2%	$ 11,139,000
7%	13,666,000
10%	19,022,000
REPLACEMENT COST:	
5-1/2%	741,000
7%	692,000
10%	586,000
ANNUAL O&M COST:	
Power (Average Flow 159 MGD)	1,960,000
Labor	472,000
Materials	236,000
TOTAL O&M COST:	$ 2,668,000
TOTAL ANNUAL COST:	
5-1/2%	$ 14,548,000
7%	17,026,000
10%	22,276,000

XII

CAPITAL COST:	
Tunnel, Drop Shafts, Etc.	$70,500,000
Pump Station	6,400,000
SUBTOTAL:	$76,900,000
Engineering, Administration & Contingency	19,200,000
TOTAL CAPITAL COST:	$96,100,000
ANNUAL CAPITAL COST:	
5-1/2%	$ 5,676,000
7%	6,963,000
10%	9,693,000
ANNUAL REPLACEMENT COST:	
5-1/2%	90,000
7%	84,000
10%	71,000
ANNUAL O&M COST:	
Power (363 MGD)	7,603,000
Labor	240,000
Materials	120,000
TOTAL O&M COST:	$ 7,963,000
TOTAL ANNUAL COST:	
5-1/2%	$13,729,000
7%	15,010,000
10%	17,727,000

XIII

CAPITAL COST:	
Tunnels, Drop Shafts, Etc.	$192,600,000
Pump Station	33,600,000
SUBTOTAL:	$226,200,000
Engineering, Administration & Contingency	56,550,000
TOTAL CAPITAL COST:	$282,750,000
ANNUAL CAPITAL COST:	
5-1/2%	$ 16,700,000
7%	20,488,000
10%	28,518,000
ANNUAL REPLACEMENT COST:	
5-1/2%	473,000
7%	442,000
10%	374,000
ANNUAL O&M COST:	
Power	3,424,000
Labor	707,000
Materials	353,000
TOTAL O&M COST:	$ 4,484,000
TOTAL ANNUAL COST:	
5-1/2%	$ 21,657,000
7%	25,414,000
10%	33,376,000

TRANSMISSION SYSTEMS- DETAILED DESIGN INFORMATION

I. RAW WASTEWATER TRANSMISSION MAIN FROM MACOMB COUNTY EQUALIZATION LAGOON TO THE TREATMENT SITE NEAR PECK.

LENGTH OF RUN - MILES	30.4
AVERAGE ANNUAL FLOW - MG	547,000
PEAK FLOW - MGD:	1,942

PEAK DESIGN FLOW:

1.5×1942 MGD = 2913 MGD = 4515 cfs

MOLE TUNNEL DESIGN:

ELEVATION AT EQUALIZATION LAGOON: 620ft.
" " PECK TREATMENT SITE: 820 ft.
DEPTH TO BED ROCK: 180ft

FROM BAUER REPORT - page A-7 USE:
TUNNEL DIAMETER: 25ft.
SLOPE: 0.0010

VERTICAL DROP OF TUNNEL:

$.0010 \times 30.4\text{ mi} \times 5280\text{ ft/mi} = 161\text{ ft}$

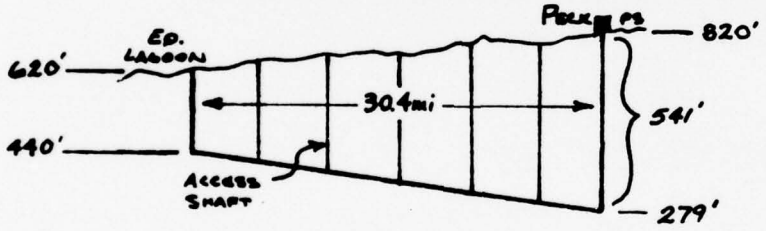

TUNNEL COST:

$\$3{,}800{,}000/\text{mi} \times 30.4\text{ mi} = \$115{,}500{,}000$

ACCESS SHAFTS:

6 - 20' DIA. $\$200$/ft. dia./ft. vert.

$6 \times \$200/\text{ft}^2 \times 20\text{ft} \times \frac{1}{2} \times (180 + 541) = \$8{,}700{,}000$

1 - 35' DIA

$\$200/\text{ft}^2 \times 35 \times 541 = \$3{,}800{,}000$

PUMP STATION: 541ft head

DESIGN PUMP CAPACITY: $2913 \times 1.2 = 3500$ MGD

COST: $\left(1 + .25\,\frac{541-100}{100}\right)\$10{,}500 \times 3500 = \$77{,}300{,}000$

II TREATED WASTEWATER TRANSMISSION MAIN FROM THE TREATMENT LAGOON NEAR PECK (ELEV. 800') TO THE STORAGE SITE NEAR FRANKENMUTH (ELEV. 680').

LENGTH OF RUN — MILES	40.0
AVERAGE ANNUAL FLOW — MG	143,000
PEAK FLOW — MGD	849

PEAK DESIGN FLOW:

$1.2 \times 849 \text{ MGD} = 1018 \text{ MGD} = 1580 \text{ cfs}$

AVERAGE SLOPE:

$$\frac{800' - 620'}{40 \text{ mi} \times 5280'/\text{mi}} = .00085$$

DESIGN COMBINATION FORCE AND GRAVITY

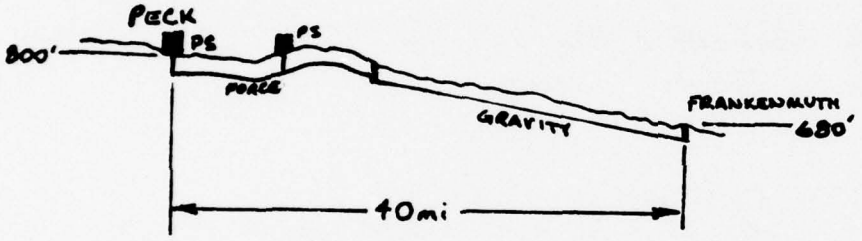

DESIGN VELOCITY: 8 fps

AREA = $\frac{1580 \text{ cfs}}{8 \text{ fps}}$ 197.5 ft² DIAMETER = $2 \times \sqrt{\frac{197.5 \text{ ft}^2}{3.14}} = 16 \text{ ft}$

SLOPE REQUIRED FOR GRAVITY FLOW: 0.0012

HEAD LOSS:

$.0012 \times 40 \text{ mi} \times 5280 \text{ ft/mi} = 253 \text{ ft.}$

NET PUMPING HEAD:

$253 \text{ ft} + (680 \text{ ft} - 800 \text{ ft}) = 133 \text{ ft}$

PIPELING COST:

$(\$300/\text{ft})(40 \text{ mi})(5280 \text{ ft/mi}) = \$63,400,000$

PUMP STATIONS 2 - 70 ft HEAD

INSTALLED CAPACITY:

$1.2 \times 1018 \text{ MGD} = 1220 \text{ MGD}$

TOTAL COST:

$2 \times \$10,500 \times 1220 = \$25,600,000$

III. TREATED WASTEWATER DISTRIBUTION MAIN FROM TREATMENT SYSTEM NEAR PECK (ELEV. 800') TO AN IRRIGATION DISTRIBUTION POINT NEAR CARSONVILLE (ELEV. 750').

LENGTH OF RUN — MILES	22
AVERAGE ANNUAL FLOW — MG	55,000
MAXIMUM ANNUAL FLOW — MG	70,550

PEAK DESIGN FLOW:

$(70{,}550\text{MG}) \times (1.5) / (270\text{ days}) = 392\text{ MGD} = 608\text{ cfs}$

AVERAGE SLOPE:

$$\frac{800' - 750'}{22\text{mi} \times 5280'/\text{mi}} = .00043$$

PIPE DIAMETER: (FROM p. 275 "HANDBOOK OF DRAINAGE & CONSTRUCTION PRODUCTS)

180 INCHES = 15 ft

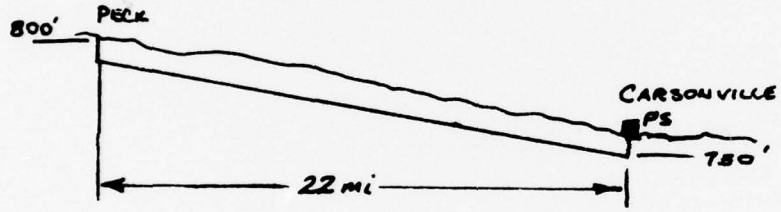

PIPELINE COST:

$(\$280/\text{ft})(5280\text{ ft/mi})(22\text{ mi}) = \$35{,}520{,}000$

PUMP STATION COST:

$(\$10{,}500/\text{MGD})(490\text{ MGD}) = \$5{,}145{,}000$

II. TREATED WASTEWATER DISTRIBUTION MAIN FROM PECK LAGOON SITE (ELEV. 800') TO CARO (ELEV. 750').

LENGTH OF RUN - MILE 27
MAXIMUM ANNUAL FLOW - MG 66,065

PEAK DESIGN FLOW:

$$\frac{1.5 \times 66{,}065\ MG}{270\ DAYS} = 367\ MGD = 569\ cfs$$

AVERAGE SLOPE:

$$\frac{800' - 750'}{27mi \times 5280'/mi} = .00035$$

∴ DESIGN FOR FORCE MAIN

DESIGN VELOCITY: 6 fps

REQUIRED AREA: $569\ cfs / 6\ fps = 95\ ft^2$

REQUIRED DIAMETER:

$$2 \times \sqrt{\frac{95\ ft^2}{3.14}} = 11\ ft$$

PIPELINE COST: $\$210/ft \times 27\ mi \times 5280\ ft/mi = \$29{,}940{,}000$

PUMP STATIONS:

PIPELINE HEAD LOSS: 164 ft.

TOTAL PUMPING HEAD: $164\ ft + (750\ ft - 800\ ft) = 114\ ft$

2 PUMPING STATIONS, 60 ft AVAILABLE HEAD

$Q_{INSTALLED} = 367\ MGD \times 1.2 = 440\ MGD$

COST = $2 \times \$10{,}680 \times 440 = \$9{,}400{,}000$

V. TREATED WASTEWATER DISTRIBUTION MAIN FROM THE FRANKENMUTH STORAGE SITE (ELEV. 680') TO AN IRRIGATION DISTRIBUTION POINT NEAR CHEASANGING (ELEV. 625').

LENGTH OF RUN — MILES	25
AVERAGE ANNUAL FLOW — MG	136,000
MAXIMUM ANNUAL FLOW — MG	174,300

PEAK DESIGN FLOW:

$174{,}300\ \text{MG} \times 1.5 / 270\ \text{DAYS} = 968\ \text{MGD} = 1500\ \text{cfs}$

FORCE MAIN DESIGN:

DESIGN VELOCITY: 8 ft/sec

REQUIRED AREA:

$\frac{1500\ \text{cfs}}{8\ \text{fps}} = 188\ \text{ft}^2$

REQUIRED DIAMETER:

$2\sqrt{\frac{188\ \text{ft}^2}{3.14}} = 15.4\ \text{ft}$

USE 15 ft.

HEADLOSS (CALCULATED FROM A REQUIRED SLOPE OF 0.0015 FOR GRAVITY FLOW):

$25\ \text{mi} \times 5280\ \text{ft/mi} \times .0015 = 198\ \text{ft}.$

NET PUMPING HEAD:

$198' + (625' - 680') = 133'$

FORCE MAIN COST:

$(\$280/\text{ft} \times 25\ \text{mi} \times 5280\ \text{ft/mi}) = \$36{,}960{,}000$

PUMP STATION:

INSTALLED CAPACITY:

$1.2 \times 968\ \text{MGD} = 1160\ \text{MGD}$

COST:

$\left(1 + .25 \times \frac{133 - 100}{100}\right) \times \$10{,}500/\text{MGD} \times 1160\ \text{MGD}$

$= \$13{,}180{,}000.$

VI. TREATED WASTEWATER DISTRIBUTION MAIN FROM THE FRANKENMUTH STORAGE SITE (ELEV. 680') TO AN IRRIGATION DISTRIBUTION POINT NEAR FAIRGROVE (ELEV. 700').

LENGTH OF RUN — MILES	15
AVERAGE ANNUAL FLOW — MG	50,260
MAXIMUM ANNUAL FLOW — MG	64,790

PEAK DESIGN FLOW:

$(64{,}790\ \text{MG})(1.5)/(270\ \text{DAYS}) = 360\ \text{MGD} = 558\ \text{CFS}$

FORCE MAIN DESIGN

DESIGN VELOCITY : 6 fps

REQUIRED AREA:

$$\frac{558\ \text{cfs}}{6\ \text{fps}} = 93\ \text{ft}^2$$

REQUIRED DIAMETER:

$$2\sqrt{\frac{93\ \text{ft}^2}{3.14}} = 10.9\ \text{ft}$$

USE 11 ft

HEADLOSS (CALCULATED FROM A REQUIRED SLOPE OF 0.0011 FOR GRAVITY FLOW)

$15\ \text{mi} \times 5280\ \text{ft/mi} \times .0011 = 87\ \text{ft}$

NET PUMPING HEAD:

$87\ \text{ft} + (700' - 680') = 107\ \text{ft}$

COST:

$(\$210/\text{ft})(15\ \text{mi})(5280\ \text{ft/mi}) = \$16{,}630{,}000$

PUMP STATION

INSTALLED CAPACITY:

$1.2 \times 360\ \text{MGD} = 432\ \text{MGD}$

COST:

$$\left(1 + .25\,\frac{107-100}{100}\right)(\$10{,}600/\text{MGD})(432\ \text{MGD})$$

$= \$4{,}700{,}000$

VII. IRRIGATION PERCOLATE RETURN MAIN FROM PECK (ELEV. 800') TO LAKE HURON (ELEV. 577').

LENGTH OF RUN — MILES	24.6
AVERAGE ANNUAL FLOW — MG	133,000
MAXIMUM ANNUAL FLOW — MG	171,200

PEAK DESIGN FLOW:

$(171{,}200\ \text{MG})(1.5)/(270\ \text{DAYS}) = 951\ \text{MGD} = 1475\ \text{cfs}$

AVERAGE SLOPE:

$$\frac{800' - 577'}{(24.6\ \text{mi})(5280\ \text{ft/mi})} = 0.0017$$

GRAVITY SEWER DESIGN
15 ft DIAMETER

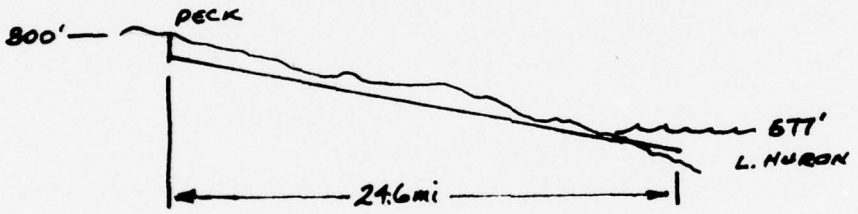

COST:

$(\$280/\text{ft})(24.6\ \text{mi})(5280\ \text{ft/mi}) = \$36{,}370{,}000$

VIII. IRRIGATION PERCOLATE RETURN MAIN FROM CARO (ELEV. 750') TO FAIRGROVE (ELEV. 700').

LENGTH OF RUN — MILES	14
AVERAGE ANNUAL FLOW — MG	51,300
MAXIMUM ANNUAL FLOW — MG	66,065

PEAK DESIGN FLOW:

$(66{,}065\ MG)(1.5)/(270\ DAYS) = 367\ MGD = 569\ cfs$

AVERAGE SLOPE:

$$\frac{750' - 700'}{(14mi)(5280\ ft/mi)} = .00068$$

GRAVITY SEWER DESIGN

13 ft DIAMETER REQUIRED

COST: $(\$250/ft)(14mi)(5280\ ft/mi) = \$18{,}500{,}000$

FORCE MAIN DESIGN

DESIGN VELOCITY: 6 fps

REQUIRED AREA: $\frac{569\ cfs}{6\ fps} = 95\ ft^2$

REQUIRED DIAMETER $2\sqrt{\frac{95\ ft^2}{3.14}} = 11\ ft$

CALCULATED HEADLOSS: 89 ft

NET HEADLOSS:

$89\ ft + (700' - 750') = 39\ ft$

FORCE MAIN COST:

$(\$210/ft)(14mi)(5280\ ft/mi) = \$15{,}500{,}000$

PUMP STATION:

INSTALLED CAPACITY — $367\ MGD \times 1.2 = 440\ MGD$

COST — $440 \times (\$10{,}600/MGD) = \$4{,}700{,}000$

TOTAL COST: $20,200,000

THE FORCE MAIN DESIGN WAS SELECTED SINCE CHANGES IN TERRAIN COULD MAKE IT DIFFICULT TO MAINTAIN THE AVERAGE SLOPE IN A GRAVITY SEWER.

IX. IRRIGATION PERCOLATE RETURN MAIN FROM FAIRGROVE (ELEV. 700') TO SAGINAW BAY (ELEV. 576').

LENGTH OF RUN — MILES	18
AVERAGE ANNUAL FLOW — MG	101,500
MAXIMUM ANNUAL FLOW — MG	130,700

PEAK DESIGN FLOW:

$$(130{,}700\ \text{MG})(1.5)/(270\ \text{DAYS}) = 726\ \text{MGD} = 1126\ \text{cfs}$$

AVERAGE SLOPE:

$$\frac{700' - 576'}{(18\ \text{mi})(5280\ \text{ft/mi})} = 0.0013$$

THERE IS SUFFICIENT SLOPE FOR GRAVITY SEWER.

REQUIRED DIAMETER: 14 FEET

COST: $(\$270/\text{ft})(18\ \text{mi})(5280\ \text{ft/mi}) = \$25{,}700{,}000$

DESIGN AND COST INFORMATION FOR LAGOON SYSTEMS

TABLE E-2

COST SUMMARY FOR

SCREENING AND GRIT REMOVAL FACILITIES

	ST. CLAIR	FRANKENMUTH	MONROE
CAPITAL COST:			
Grit Removal - Structure	$1,471,000	---	$1,260,900
Grit Removal - Equipment	313,000	---	274,000
Screening Units - Structure	792,000	---	686,400
Screening Units - Equipment	600,000	---	520,000
Land	1,500	---	1,500
Engineering, Administration and Contingency	794,400	---	685,700
TOTAL:	$3,971,950	---	$3,428,500
AMORTIZED CAPITAL COST:			
50 Years @ 5-1/2%	$ 235,000	---	$ 202,000
50 Years @ 7%	288,000	---	248,000
50 Years @ 10%	401,000	---	346,000
AMORTIZED REPLACEMENT COST:			
50 Years @ 5-1/2%	14,000	---	12,000
50 Years @ 7%	12,000	---	11,000
50 Years @ 10%	8,000	---	7,000
ANNUAL O&M COSTS:			
Materials and Supplies	3,200	---	2,700
Labor ($16,500/man)	49,500	---	49,500
Power	--	---	--
TOTAL:	$ 52,700	---	$ 51,200
TOTAL ANNUAL COST:			
50 Years @ 5-1/2%	$ 301,700	---	$ 265,200
50 Years @ 7%	352,700	---	310,200
50 Years @ 10%	461,700	---	454,200

TABLE E-3

COST SUMMARY FOR AERATED LAGOONS

	ST. CLAIR	MONROE
CAPITAL COST:		
Earth Work	$ 7,109,000	$ 5,973,000
Slope, Bottom and Roadway	16,272,000	16,050,000
Aeration Equipment	31,500,000	26,460,000
Electrical	5,400,000	4,536,000
Flumes	11,710,000	7,041,000
Land	1,070,000	1,651,000
Engineering, Administration and Contingency	17,998,000	15,015,000
TOTAL:	$91,059,000	$76,726,000
AMORTIZED CAPITAL COST:		
50 Years @ 5-1/2%	$ 5,378,000	$ 4,532,000
50 Years @ 7%	6,598,000	5,560,000
50 Years @ 10%	9,184,000	7,739,000
AMORTIZED REPLACEMENT COST:		
50 Years @ 5-1/2%	488,000	410,000
50 Years @ 7%	420,000	353,000
50 Years @ 10%	293,000	246,000
ANNUAL O&M COST:		
Materials and Supplies	360,000	300,000
Labor ($16,500/man)	2,475,000	2,079,000
Power	8,820,000	7,409,000
Chemicals (Ozonation)	5,514,000	4,071,000
TOTAL:	$17,169,000	$13,859,000
TOTAL ANNUAL COST:		
50 Years @ 5-1/2%	$23,035,000	$18,801,000
50 Years @ 7%	24,187,000	19,772,000
50 Years @ 10%	26,646,000	21,884,000

TABLE E-4

COST SUMMARY FOR STORAGE LAGOONS

	ST. CLAIR	FRANKENMUTH	MONROE
CAPITAL COST:			
Earthwork	$38,555,000	$28,040,000	$56,080,000
Slope, Bottom and Roadway	17,663,000	23,100,000	46,215,000
Interconnection Structures	1,446,000	1,050,000	1,791,000
Outlet and Chlorination	2,437,000	---	3,645,000
Land	17,844,000	16,900,000	44,096,000
Engineering, Administration and Contingency	15,025,000	13,048,000	26,933,000
TOTAL:	$92,970,000	$82,138,000	$178,760,000
AMORTIZED CAPITAL COST:			
50 Years @ 5-1/2%	$ 5,491,000	$ 4,851,000	$ 10,558,000
50 Years @ 7%	6,737,000	6,100,000	12,953,000
50 Years @ 10%	9,377,000	8,284,000	18,030,000
AMORTIZED REPLACEMENT COST:	---	---	---
ANNUAL O&M COST:			
Materials and Supplies	60,100	52,000	107,700
Labor ($16,500/man)	181,500	148,000	272,200
Power	---	---	---
Chemicals	1,415,000	---	1,045,000
TOTAL:	$ 1,656,600	$ 200,000	$ 1,424,900
TOTAL ANNUAL COST:			
50 Years @ 5-1/2%	$ 7,147,600	$ 5,051,000	$ 12,012,900
50 Years @ 7%	8,393,600	6,300,000	14,377,900
50 Years @ 10%	11,033,600	8,484,000	19,454,900

TABLE E-5

COST SUMMARY FOR SEEPAGE CONTROL

	ST. CLAIR	FRANKENMUTH	MONROE
CAPITAL COST:			
Drainage Channel	$1,905,000	$1,197,000	$2,959,000
Drainage Pump Station	378,000	252,000	593,000
Observation Wells	59,000	36,000	89,000
Engineering, Administration and Contingency	586,000	371,000	910,000
TOTAL:	$2,928,000	$1,856,000	$4,551,000
AMORTIZED CAPITAL COST:			
50 Years @ 5-1/2%	$ 173,000	$ 110,000	$ 269,000
50 Years @ 7%	212,000	134,000	330,000
50 Years @ 10%	295,000	187,000	459,000
AMORTIZED REPLACEMENT COST:	---	---	---
ANNUAL O&M COST:			
Materials and Supplies	12,000	7,000	18,000
Labor ($16,500/man)	66,000	49,500	115,500
Power	187,000	124,000	293,000
TOTAL:	$ 265,000	$ 180,500	$ 426,500
TOTAL ANNUAL COST:			
50 Years @ 5-1/2%	$ 438,000	$ 290,500	$ 695,500
50 Years @ 7%	477,000	314,500	756,500
50 Years @ 10%	560,000	367,500	885,500

TABLE E-6

SLUDGE DISPOSAL (LAND APPLICATION)

0.8 Tons Per MG of M&I Wastewater

Monroe (558 MGD)(0.8)(365) = 163,000 Tons/Yr

St. Clair (862 MGD)(0.8)(365) = 252,000 Tons/Yr

10 Tons/Acre

Monroe 16,300 Acres = 35.4 Square Miles

St. Clair 25,200 Acres = 54.8 Square Miles

Monroe - 7 Dredge-Plow Systems

St. Clair - 11 Dredge-Plow Systems

	ST. CLAIR	MONROE
CAPITAL COST:		
Drainage System	$22,367,000	$15,412,000
Equipment	3,918,000	2,632,000
Header Pipe	16,173,000	9,211,000
Pump Stations	1,068,000	460,000
SUBTOTAL:	$43,526,000	$27,255,000
Land	26,350,000	31,152,000
Engineering, Administration and Contingency	10,880,000	14,600,000
TOTAL:	$80,756,000	$58,407,000
AMORTIZED CAPITAL COST:		
5-1/2%	$ 4,770,000	$ 3,450,000
7%	5,852,000	4,232,000
10%	8,145,000	5,891,000
ANNUAL REPLACEMENT COST:		
Header Pipe and Pump Stations (25 Yr.):		
5-1/2%	$ 267,000	$ 150,000
7%	230,000	129,000
10%	160,000	90,000

SLUDGE DISPOSAL (LAND APPLICATION) (Cont'd)

	ST. CLAIR	MONROE
ANNUAL O&M COST:		
Power	$ 31,000	$ 19,000
Labor	2,171,000	1,426,000
Materials and Supplies	1,107,000	724,000
TOTAL:	$ 3,309,000	$ 2,169,000

TABLE F-1

COST ESTIMATE FOR SLUDGE LANDFILL SITES

ADVANCED WASTEWATER TREATMENT ALTERNATIVE ONE

	Capital Cost $\$x10^6$	Amortized Capital Cost $\$x10^3$	Amortized Replacement Cost $\$x10^3$	Annual Operation and Maintenance $\$x10^3$	Total Annual Treatment Cost $\$x10^3$
Lenawee Co. 2700 T/D AVE 5400 T/D MAX					
1. Hauling	1.05	62	75	1174	1310
2. Landfill	5.20	307	58	1084	1449
3. Land (5110 Acres @$1500/A)	7.66	452	--	--	452
Subtotal	13.91	817	128	2258	3203
Eng., Legal, Admin. & Cont.	4.16	245	--	--	245
TOTAL COSTS:	18.07	1066	133	2258	3456
St. Clair Co. 1300 T/D AVE 2600 T/D MAX					
1. Hauling	.42	25	30	407	462
2. Landfill	2.65	157	29	664	850
3. Land (1470 Acres @ $1500/A)	2.20	130	--	--	130
Subtotal	5.27	312	59	1071	1442
Eng., Legal, Admin & Cont.	1.58	93	--	--	93
TOTAL COSTS:	6.85	405	59	1071	1545

TABLE F-2

COST ESTIMATE FOR SLUDGE LANDFILL SITES

ADVANCED WASTEWATER TREATMENT ALTERNATIVE TWO

	Capital Cost $\$x10^6$	Amortized Capital Cost $\$x10^3$	Amortized Replacement Cost $\$x10^3$	Annual Operation and Maintenance $\$x10^3$	Total Annual Treatment Cost $\$x10^3$
Lenawee Co. 1200 T/D AVE 4200 T/D MAX					
1. Hauling	.95	57	68	918	1043
2. Landfill Equipment	4.10	242	45	920	1207
3. Land (2076 Acres @ $1500/A)	3.11	184	--	--	184
Subtotal	8.16	483	113	1838	2434
Eng., Legal, Admin. & Cont.	2.45	145	--	--	145
TOTAL COSTS:	10.61	628	113	1838	2579
St. Clair Co. 1200 T/D AVE 2400 T/D MAX					
1. Hauling	.70	41	49	520	610
2. Landfill Equipment	2.47	146	27	618	791
3. Land (1125 Acres @ $1500/A)	1.69	100	--	--	100
Subtotal	4.86	287	76	1138	1501
Eng., Legal, Admin. & Cont.	1.46	86	--	--	86
TOTAL COSTS:	6.32	373	76	1138	1587

TABLE F-3

COST ESTIMATE FOR SLUDGE LANDFILL SITES

INDEPENDENT PHYSICAL-CHEMICAL TREATMENT ALTERNATIVE ONE

	Capital Cost $\$x10^6$	Amortized Capital Cost $\$x10^3$	Amortized Replacement Cost $\$x10^3$	Annual Operation and Maintenance $\$x10^3$	Total Annual Treatment Cost $\$x10^3$
Lenawee Co. 2500 T/D AVE 5000 T/D MAX					
1. Hauling	.614	36	45	766	847
2. Landfill Equipment	4.800	283	53	1049	1385
3. Land (2324 Acres @ $1500/A)	3.486	206	--	--	206
Subtotal	8.900	525	98	1815	2438
Eng., Legal, Admin. & Cont.	2.670	158	--	--	158
TOTAL COSTS:	11.57	683	98	1815	2596
St. Clair Co. 1200 T/D AVE 2400 T/D MAX					
1. Hauling	.39	23	28	391	442
2. Landfill Equipment	2.47	146	27	618	791
3. Land (1108 Acres @ $1500/A)	1.66	98	--	--	98
Subtotal	4.52	267	55	1009	1331
Eng., Legal, Admin. & Cont.	1.36	80	--	--	80
TOTAL COSTS:	5.88	347	55	1009	1411

TABLE F-4

COST ESTIMATE FOR SLUDGE LANDFILL SITES

INDEPENDENT PHYSICAL-CHEMICAL TREATMENT ALTERNATIVE TWO

	Capital Cost $\$x10^6$	Amortized Capital Cost $\$x10^3$	Amortized Replacement Cost $\$x10^3$	Annual Operation and Maintenance $\$x10^3$	Total Annual Treatment Cost $\$x10^3$
Lenawee Co.					
1. Hauling	1.03	61	73	978	1112
2. Landfill 5100 T/D MAX 2550 T/D AVE	5.00	295	55	1136	1486
3. Land (2386 Acres)	3.58	211	--	--	211
Subtotal	9.61				
Eng., Legal, Admin. & Cont.	2.88	170	--	--	170
TOTAL COSTS:	12.49	737	128	2114	2979
St. Clair Co.					
1. Hauling	.72	42	50	494	586
2. Landfill 2450 T/D MAX 1225 T/D AVE	2.50	147	27	635	809
3. Land (1141 Acres)	1.71	101	--	--	101
Subtotal	4.93				
Eng., Legal, Admin. & Cont.	1.48	87	--	--	87
TOTAL COSTS:	6.41	377	77	1129	1583

TABLE F-5

COST ESTIMATE FOR SLUDGE LANDFILL SITES

INDEPENDENT PHYSICAL-CHEMICAL TREATMENT ALTERNATIVE THREE

	Capital Cost $\$x10^6$	Amortized Capital Cost $\$x10^3$	Amortized Replacement Cost $\$x10^3$	Annual Operation and Maintenance $\$x10^3$	Total Annual Treatment Cost $\$x10^3$
St. Clair Co.					
1. Hauling	1.00	59	71	784	914
2. Landfill 4836 T/D MAX 1700 T/D AVE	4.80	283	57	800	1140
3. Land (2368 Acres)	3.55	210	--	--	210
Subtotal	9.35				
Eng., Legal, Admin. & Cont.	2.80	165	--	--	165
TOTAL COSTS:	12.15	717	128	1584	2429
Lenawee Co.					
1. Hauling	3.78	223	268	4767	5258
2. Landfill 10,000 T/D MAX 6,116 T/D AVE	11.3	667	133	2009	2809
3. Land (13,423 Acres)	20.1	1187	--	--	1187
Subtotal	35.18				
Eng., Legal, Admin. & Cont.	10.55	623	--	--	623
TOTAL COSTS:	45.73	2700	401	6776	9877

TABLE F-6

COST ESTIMATE FOR SLUDGE LANDFILL SITES

LAND IRRIGATION TREATMENT ALTERNATIVES ONE AND THREE

	Capital Cost $\$x10^6$	Amortized Capital Cost $\$x10^3$	Amortized Replacement Cost $\$x10^3$	Annual Operation and Maintenance $\$x10^3$	Total Annual Treatment Cost $\$x10^3$
Lenawee Co.					
1. Hauling	0.70	41	50	469	560
2. Landfill Equipment (1100 T/D)	1.39	82	15	531	628
3. Land (980 Acres)	1.47	87	--	--	87
Subtotal	3.56	210			1275
Eng., Legal, Admin. & Cont.	1.07	63	--	--	63
TOTAL COSTS:	4.63	273	65	1000	1338
St. Clair Co.					
1. Hauling	.74	44	52	465	561
2. Landfill Equipment	1.39	82	15	531	628
3. Land (980 Acres)	1.47	87	--	--	87
Subtotal	3.60	213	67	996	1276
Eng., Legal, Admin. & Cont.	1.08	64	--	--	64
TOTAL COSTS:	4.68	277	67	996	1340

TABLE F-7

COST ESTIMATE FOR SLUDGE LANDFILL SITES

LAND IRRIGATION TREATMENT ALTERNATIVE TWO

	Capital Cost $\$ \times 10^6$	Amortized Annual Capital Cost $\$ \times 10^3$	Amortized Annual Replacement Cost $\$ \times 10^3$	Annual Operation and Maintenance Cost $\$ \times 10^3$	Total Annual Treatment Cost $\$ \times 10^3$
St. Clair Co.					
1. Hauling	.74	43	52	482	577
2. Landfill 1130 T/D AVE 2200 T/D MAX	2.35	139	27	598	764
3. Land (1048 Acres)	1.57	93	--	--	93
Subtotal	4.66	275	79	1080	1434
Eng., Legal, Admin. & Cont.	1.40	83	--	--	83
Total Cost	6.06	358	79	1080	1517
Lenawee Co.					
1. Hauling	.80	48	57	542	647
2. Landfill 1240 T/D AVE 2500 T/D MAX	2.65	157	31	634	822
3. Land (1150 Acres)	1.72	102	--	--	102
Subtotal	5.17	307	88	1176	1571
Eng., Legal, Admin. & Cont.	1.55	92	--	--	92
Total Cost	6.72	399	88	1176	1663

TABLE F-8

COST ESTIMATE FOR SLUDGE LANDFILL SITES

COMBINATION WASTEWATER TREATMENT ALTERNATIVE ONE

	Capital Cost $\$x10^6$	Amortized Capital Cost $\$x10^3$	Amortized Replacement Cost $\$x10^3$	Annual Operation and Maintenance $\$x10^3$	Total Annual Treatment Cost $\$x10^3$
Lenawee Co. 2550 T/D AVE 5100 T/D MAX					
1. Hauling	.84	50	60	931	1041
2. Landfill	5.00	295	55	1042	1392
3. Land (4058 Acres)	6.09	360	--	--	360
Subtotal	11.93	705	115	1973	2793
Eng., Legal, Admin. & Cont.	3.58	211	--	--	211
TOTAL COSTS:	15.51	916	115	1973	3004
St. Clair Co. 1250 T/D AVE 2500 T/D MAX					
1. Hauling	.70	41	49	588	678
2. Landfill	2.52	149	28	643	820
3. Land (1275 Acres)	1.91	113	--	--	113
Subtotal	5.13	303	77	1231	1611
Eng., Legal, Admin. & Cont.	1.54	91	--	--	91
TOTAL COSTS:	6.67	394	77	1231	1702

TABLE F-9

COST ESTIMATE FOR SLUDGE LANDFILL SITES

COMBINATION WASTEWATER TREATMENT ALTERNATIVE TWO

	Capital Cost $\$x10^6$	Amortized Capital Cost $\$x10^3$	Amortized Replacement Cost $\$x10^3$	Annual Operation and Maintenance $\$x10^3$	Total Annual Treatment Cost $\$x10^3$
Lenawee Co. 5100 T/D MAX 2850 T/D AVE					
1. Hauling	1.09	64	77	1078	1219
2. Landfill	5.50	325	61	1144	1530
3. Land (4339 Acres)	6.51	384	--	--	384
Subtotal	13.10	773	138	2222	3133
Eng., Legal, Admin. & Cont.	3.93	232	--	--	232
TOTAL COSTS:	17.00	1005	138	2222	3365
St. Clair Co. 2500 T/D MAX 1250 T/D AVE					
1. Hauling	.74	43	52	490	585
2. Landfill	2.55	151	28	643	822
3. Land (1225 Acres)	1.84	109	--	--	109
Subtotal	5.13	303	80	1133	1516
Eng., Legal, Admin. & Cont.	1.54	91	--	--	91
TOTAL COSTS:	6.67	394	80	1133	1607

TABLE F-10

COST ESTIMATE FOR SLUDGE LANDFILL SITES

COMBINATION WASTEWATER TREATMENT ALTERNATIVE THREE

	Capital Cost $\$x10^6$	Amortized Capital Cost $\$x10^3$	Amortized Replacement Cost $\$x10^3$	Annual Operation and Maintenance $\$x10^3$	Total Annual Treatment Cost $\$x10^3$
St. Clair Co.					
1. Hauling	.74	43	52	423	518
2. Landfill 1170 T/D AVE 2300 T/D MAX	2.60	154	31	611	796
3. Land (1157 Acres)	1.74	103	--	--	103
Subtotal	5.08				
Eng., Legal, Admin. & Cont.	1.52	90	--	--	90
TOTAL COSTS:	6.60	390	83	1034	1507
Lenawee Co.					
1. Hauling	1.07	63	76	1053	1192
2. Landfill 2300 T/D AVE 4600 T/D MAX	4.60	272	54	982	1308
3. Land (4275 Acres)	6.41	379	--	--	379
Subtotal	12.08				
Eng., Legal, Admin. & Cont.	3.62	214	--	--	214
TOTAL COSTS:	15.70	928	130	2035	3093

TABLE F-11

COST ESTIMATE FOR SLUDGE LANDFILL SITES

COMBINATION WASTEWATER TREATMENT ALTERNATIVE FOUR

	Capital Cost $\$x10^6$	Amortized Capital Cost $\$x10^3$	Amortized Replacement Cost $\$x10^3$	Annual Operation and Maintenance $\$x10^3$	Total Annual Treatment Cost $\$x10^3$
St. Clair Co.					
1. Hauling	.74	43	52	423	518
2. Landfill 1170 T/D AVE 2340 T/D MAX	2.60	154	31	611	796
3. Land (1157 Acres)	1.74	103	--	--	103
Subtotal	5.08				
Eng., Legal, Admin. & Cont.	1.52	90	--	--	90
TOTAL COSTS:	6.60	390	83	1034	1507
Lenawee Co.					
1. Hauling	1.01	60	72	805	937
2. Landfill 2226 T/D AVE 4400 T/D MAX	4.30	254	51	959	1264
3. Land (3742 Acres)	5.61	331	--	--	331
Subtotal	10.92	645	123	1764	2532
Eng., Legal, Admin. & Cont.	3.28	194	--	--	194
TOTAL COSTS:	14.20	839	123	1764	2726

TABLE F-12

COST ESTIMATE FOR SLUDGE LANDFILL SITES

REPRESENTATIVE PLAN ONE

	Capital Cost $\$x10^6$	Amortized Capital Cost $\$x10^3$	Amortized Replacement Cost $\$x10^3$	Annual Operation and Maintenance $\$x10^3$	Total Annual Treatment Cost $\$x10^3$
Lenawee Co. 5000 T/D MAX 2500 T/D AVE					
1. Hauling	1.00	59	71	968	1098
2. Landfill	4.40	260	49	1049	1358
3. Land (2402 Acres)	3.60	213	--	--	213
Subtotal	9.0	532	120	2017	2669
Eng., Legal, Admin. & Cont.	2.7	159	--	--	159
TOTAL COSTS:	11.7	691	120	2017	2828
St. Clair Co. 2500 T/D MAX 1250 T/D AVE					
1. Hauling	.72	42	51	484	577
2. Landfill	2.55	151	28	643	822
3. Land (1141 Acres)	1.71	101	--	--	101
Subtotal	4.98	294	79	1127	1500
Eng., Legal, Admin. & Cont.	1.49	88	--	--	88
TOTAL COSTS:	6.47	382	79	1127	1588

TABLE F-13

COST ESTIMATE FOR SLUDGE LANDFILL SITES

REPRESENTATIVE PLANS TWO AND THREE

	Capital Cost $\$x10^6$	Amortized Capital Cost $\$x10^3$	Amortized Replacement Cost $\$x10^3$	Annual Operation and Maintenance $\$x10^3$	Total Annual Treatment Cost $\$x10^3$
Lenawee Co. 4800 T/D MAX 2400 T/D AVE					
1. Hauling	.98	58	70	941	1069
2. Landfill	4.20	248	47	974	1269
3. Land	3.50	207	--	--	207
Subtotal	8.68	513	117	1915	2545
Eng., Legal, Admin. & Cont.	2.60	153	--	--	153
TOTAL COSTS:	11.28	666	117	1915	2698
St. Clair Co. 2300 T/D MAX 1150 T/D AVE					
1. Hauling	.72	42	51	481	574
2. Landfill	2.40	142	26	596	764
3. Land	1.61	95	--	--	95
Subtotal	4.73	289	77	1077	1433
Eng., Legal, Admin. & Cont.	1.42	74	--	--	74
TOTAL COSTS:	6.15	363	77	1077	1517

TABLE F-13

COST ESTIMATE FOR SLUDGE LANDFILL SITES

REPRESENTATIVE PLANS TWO AND THREE

	Capital Cost $\$x10^6$	Amortized Capital Cost $\$x10^3$	Amortized Replacement Cost $\$x10^3$	Annual Operation and Maintenance $\$x10^3$	Total Annual Treatment Cost $\$x10^3$
Lenawee Co. 4800 T/D MAX 2400 T/D AVE					
1. Hauling	.98	58	70	941	1069
2. Landfill	4.20	248	47	974	1269
3. Land	3.50	207	--	--	207
Subtotal	8.68	513	117	1915	2545
Eng., Legal, Admin. & Cont.	2.60	153	--	--	153
TOTAL COSTS:	11.28	666	117	1915	2698
St. Clair Co. 2300 T/D MAX 1150 T/D AVE					
1. Hauling	.72	42	51	481	574
2. Landfill	2.40	142	26	596	764
3. Land	1.61	95	--	--	95
Subtotal	4.73	289	77	1077	1433
Eng., Legal, Admin. & Cont.	1.42	74	--	--	74
TOTAL COSTS:	6.15	363	77	1077	1517

END

DTIC

8-86